YANMAR

PARTS CATALOG

0CNP5-M36002EN

Last update Jan., 2017

Contents

0CNP5-M36002

Fig. No.	Fig. Name
ENGINE CONTROL	
1.	ENGINE MOUNT
2.	ENGINE RELATED
3.	ENGINE ACCESSORIES
4.	ENGINE ACCESSORIES(CABIN)
292.	ENGINE ACCESSORIES(A,K,KW,KWA)
5.	ACCEL LEVER
6.	FOOT ACCEL
7.	EXHAUST PORT
222.	EXHAUST PORT(A,K,KW,KWA)
223.	EXHAUST PORT(A)(CABIN)
8.	FUEL TANK
9.	TANK BRACKET
10.	FUEL PIPE
11.	FUEL PIPE(CABIN)
224.	FUEL PIPE(A,K,KW,KWA)
12.	SHUTTER PLATE
FRONT AXLE	
13.	CHASSIS FRAME(FRONT)
225.	CHASSIS FRAME(FRONT)(A,K,KW,KWA)
14.	RADIATOR SUPPORT
15.	CHASSIS FRAME(REAR)
226.	CHASSIS FRAME(REAR)(A,K,KW,KWA)
16.	FRONT WEIGHT(30K)
17.	FRONT WEIGHT(50K)
18.	FRONT SUPPORT
19.	TIE ROD
20.	RING GEAR
21.	DIFFERENTIAL GEAR
22.	PROPELLER SHAFT
227.	PROPELLER SHAFT(A,K,KW,KWA)
23.	FRONT SHAFT(1)
24.	FRONT AXLE CASE
25.	FRONT GEAR CASE
26.	FRONT SHAFT(2)
27.	FRONT SPINDLE
28.	FRONT WHEEL TIRE
29.	FRONT WHEEL TIRE
228.	FRONT WHEEL TIRE(K)
229.	FRONT WHEEL TIRE(A)
276.	FRONT WHEEL TIRE
281.	FRONT WHEEL TIRE
30.	HUB BOLT
31.	STEERING COLUMN
230.	STEERING COLUMN(A,K,KW,KWA)
32.	STEERING SHAFT
33.	STEERING WHEEL
231.	STEERING WHEEL(A,K,KW,KWA)
34.	P.S.T. CYLINDER

Contents

0CNP5-M36002

Fig. No.	Fig. Name
35.	P.S.T. VALVE
36.	P.S.T. HOSE
280.	WEIGHT LOCK PIN(KWA)

TRANSMISSION

Fig. No.	Fig. Name
37.	DRIVE SHAFT
232.	DRIVE SHAFT(A,K,KW,KWA)
38.	DAMPER DISC
39.	FLYWHEEL HOUSING
40.	FLYWHEEL HOUSING(CABIN)
41.	FRONT COVER
42.	TRANSMISSION CASE
43.	CENTER PLATE
44.	CONTROL VALVE
45.	HYDRAULIC PIPING
233.	HYDRAULIC PIPING(A,K,KW,KWA)
46.	REAR COVER
47.	P.T.O. VALVE
48.	PUMP SHAFT
49.	INPUT SHAFT
50.	DAMPER SHAFT
51.	I-H.M.T. OUTPUT
52.	REVERSER SHAFT
53.	REVERSER SHAFT(HIGH SPEED)
54.	COUNTER SHAFT
55.	COUNTER SHAFT(HIGH SPEED)
56.	REVERSER SHAFT
57.	P.T.O. CLUTCH
58.	P.T.O. DRIVE SHAFT
59.	P.T.O. DRIVEN SHAFT
60.	P.T.O. FINAL PINION
61.	P.T.O. FINAL PINION
62.	P.T.O. SHAFT
63.	P.T.O. SHAFT
64.	P.T.O. IDLE GEAR
65.	P.T.O. SHAFT COVER
66.	P.T.O. SHAFT GUARD
67.	MAIN SHIFT LEVER
68.	SUB SHIFT
69.	P.T.O. SHIFT
70.	SUB SHIFT LEVER
71.	RANGE SHIFT LEVER(HIGH SPEED)
72.	P.T.O. LEVER(1)
73.	P.T.O. LEVER(2)
74.	CONTROLLER(H.M.T.)
234.	CONTROLLER(H.M.T.)(A,K,KW,KWA)
75.	SENSOR(TRANS MISSION)
76.	FRONT IDLE
77.	FRONT DRIVE
78.	I-H.M.T.

Contents

0CNP5-M36002

Fig. No.	Fig. Name
REAR AXLE	
79.	RING GEAR
80.	DIFFERENTIAL GEAR
81.	DIFFERENTIAL CARRIER
82.	REAR HOUSING
83.	REAR HOUSING
84.	DIFFERENTIAL LOCK
85.	DIFFERENTIAL LOCK PEDAL
86.	FINAL GEAR
87.	FINAL GEAR
88.	REAR AXLE SHAFT
89.	REAR AXLE SHAFT
90.	REAR WHEEL TIRE
91.	REAR WHEEL TIRE
92.	REAR WHEEL TIRE
93.	REAR WHEEL TIRE
235.	REAR WHEEL TIRE(K
236.	REAR WHEEL TIRE(KW)
277.	REAR WHEEL TIRE
278.	REAR WHEEL TIRE
282.	REAR WHEEL TIRE
283.	REAR WHEEL TIRE
94.	HUB BOLT
95.	HUB BOLT
96.	BRAKE
97.	BRAKE PIPE
98.	PEDAL
99.	PEDAL LINK(1)
100.	PEDAL LINK(2)
237.	PEDAL LINK(2) (A,K,KW,KWA)
HYDRAULIC CONTROL	
101.	HYDRAULIC PUMP
102.	HYDRAULIC CYLINDER CASE
238.	HYDRAULIC CYLINDER CASE (A,K,KW)
103.	PISTON
104.	LIFT CRANK
105.	CONTROL VALVE
106.	RELIEF VALVE
107.	SAFETY VALVE
108.	STOP VALVE KNOB
109.	HYDRAULIC CONTROL
239.	HYDRAULIC CONTROL(A,K,KW,KWA)
110.	HYDRAULIC CONTROL LEVER KNOB
240.	HYDRAULIC CONTROL LEVER KNOB(A,K,KW,KWA)
111.	HYDRAULIC PIPING(1)
112.	HYDRAULIC PIPING(1)(CABIN)
241.	HYDRAULIC PIPING(1) (A,K,KW,KWA)
113.	HYDRAULIC PIPING(2)

Contents

Fig. No.	Fig. Name
114.	HYDRAULIC FILTER
242.	HYDRAULIC FILTER(A,K,KW,KWA)
115.	OIL COOLER
116.	OIL COOLER(CABIN)
117.	OIL COOLER PIPE
244.	OIL COOLER PIPE(A,K,KW,KWA)
243.	HOSE GUARD(A,K,KW)
285.	HOSE GUARD(KWA)

ELECTRICAL PARTS

Fig. No.	Fig. Name
118.	WIRE HARNESS(F)
119.	WIRE HARNESS(F)(CABIN)
245.	WIRE HARNESS(F) (A,K,KW,KWA)
293.	WIRE HARNESS(F) (SIMPLE)
120.	WIRE HARNESS(A)
246.	WIRE HARNESS(A) (A,K,KW)
121.	WIRE HARNESS(AIR CONDITIONER)
122.	WIRE HARNESS(B)
123.	BATTERY
124.	BATTERY CLAMP
125.	SWITCH(1)
126.	SWITCH(2)
127.	SWITCH(2)(CABIN)
128.	STEERING SWITCH
129.	RELAY(1)
130.	RELAY(2)
131.	LAMP
132.	FRONT LAMP
133.	BACK LAMP
247.	BACK LAMP(KW,KWA)(HIGH SPEED)
134.	METER
135.	HORN
136.	BACK BUZZER

FITTINGS

Fig. No.	Fig. Name
137.	FRONT FRAME
138.	FRONT FRAME(CABIN)
139.	BONNET FRAME
248.	BONNET FRAME(A,K,KW,KWA)
140.	BONNET
249.	BONNET(A,K,KW,KWA)
141.	SIDE COVER
250.	SIDE COVER(A,K,KW,KWA)
142.	DASHBOARD
143.	DASHBOARD(CABIN)
144.	COLUMN COVER(FRONT)
145.	COLUMN COVER(REAR)
146.	FENDER
147.	FENDER(CABIN)
251.	FENDER(A,K,KW,KWA)

Contents

Fig. No.	Fig. Name
148.	LEVER GUIDE(LEFT)
252.	LEVER GUIDE(LEFT)(A,K,KW)
253.	LEVER GUIDE(LEFT)(KW,KWA)(HIGH SPEED)
149.	LEVER GUIDE(RIGHT)
254.	LEVER GUIDE(RIGHT)(A,K,KW,KWA)
150.	ARMREST
255.	ARMREST(A,K,KW,KWA)
151.	FLOOR
256.	FLOOR(A,K,KW,KWA)
152.	FLOOR MOUNT
153.	FLOOR MOUNT(CABIN)
154.	FLOOR ATTACHMENT(1)
257.	FLOOR ATTACHMENT(1)(A,K,KW,KWA)
155.	FLOOR ATTACHMENT(2)
258.	FLOOR ATTACHMENT(2)(A,K,KW,KWA)
156.	CABIN ATTACHMENT(1)
157.	CABIN ATTACHMENT(2)
294.	CABIN ATTACHMENT(2) (SIMPLE)
158.	FLOOR BRACKET
259.	FLOOR BRACKET (A,K,KW,KWA)
159.	SEAT
160.	SEAT(HIGH SPEED)
260.	SEAT(K,KW,KWA)
261.	SEAT(A)
161.	SEAT BELT

Fig. No.	Fig. Name
162.	SEAT BELT(HIGH SPEED)
163.	TOOL BOX
295.	TOOL BOX(A,K,KW,KWA)
164.	REARVIEW MIRROR
165.	REARVIEW MIRROR(HIGH SPEED)
262.	REARVIEW MIRROR(A,K,KW)
263.	REARVIEW MIRROR(KW,KWA)(HIGH SPEED)
166.	BLAND MARK
297.	SMV EMBLEM
298.	SMV BRACKET
299.	SMV BRACKET(CABIN)

LABEL

167.	LABEL(CONTROL)(1)
168.	LABEL(CONTROL)(1)(CABIN)
264.	LABEL(CONTROL)(1)(A,K,KW,KWA)
169.	LABEL(CONTROL)(2)
170.	LABEL(NAME)
171.	LABEL(NAME)
172.	LABEL(NAME)
173.	LABEL(NAME)
265.	LABEL(NAME)(A,K,KW)
266.	LABEL(NAME)(A,KW,KWA)
174.	LABEL(FRAME)
175.	LABEL(FRAME)(HIGH SPEED)

Contents

Fig. No.	Fig. Name
267.	LABEL(FRAME)(A,K,KW,KWA)
176.	LABEL(SUB SHIFT)
177.	LABEL(HIGH SPEED)
178.	LABEL(SAFETY)(1)
179.	LABEL(LABEL(SAFETY)(1)(CABIN)
180.	LABEL(SAFETY)(2)
296.	LABEL(SAFETY)(SMV)

HITCH

181.	TOP LINK
300.	TOP LINK(KWA)
182.	LIFT LINK(LEFT)
268.	LIFT LINK(LEFT)(A,K,KW)
183.	LIFTING CYLINDER
269.	LIFTING CYLINDER(A,K,KW)
184.	LOWER LINK & CHECK CHAIN
270.	LOWER LINK & CHECK CHAIN(A,K,KW)
185.	LOWER LINK PIN
186.	CHECK CHAIN BRACKET
187.	SWING SENSOR
188.	CONTROLLER(U.F.O.)
189.	LIFT SENSOR
284.	DRAWBAR HITCH(KWA)
286.	SENSOR(SLOPE)

Fig. No.	Fig. Name

CABIN

190.	CABIN FRAME
191.	DOOR
192.	FRONT WINDOW
193.	SIDE WINDOW
194.	REAR WINDOW
301.	REAR WINDOW(SIMPLE)
195.	INTERIORS
302.	INTERIORS(SIMPLE)
196.	CABIN SEAL(1)
197.	CABIN SEAL(2)
198.	ROOF
199.	REARVIEW MIRROR
200.	LAMP
303.	LAMP(SIMPLE)
201.	SWITCH
304.	SWITCH(SIMPLE)
202.	FRONT WIPER
203.	FRONT WASHER NOZZLE
204.	WASHER TANK
305.	WASHER TANK(SIMPLE)
205.	REAR WIPER
206.	AUDIO
207.	AIR CONDITIONER SYSTEM(1)
208.	AIR CONDITIONER SYSTEM(2)

Contents

0CNP5-M36002

Fig. No.	Fig. Name
209.	AIR CONDITIONER(UNIT)
210.	AIR CONDITIONER(1)
211.	AIR CONDITIONER(2)
212.	AIR CONDITIONER DUCT

SAFETY FRAME

213.	SAFETY FRAME
214.	SAFETY FRAME(HIGH SPEED)
271.	SAFETY FRAME(A,K,KW,KWA)

ACCESSORIES

215.	DOCUMENT
306.	DOCUMENT(SIMPLE)

OPTIONAL

216.	REARVIEW MIRROR(LEFT)
272.	REARVIEW MIRROR(LEFT)(A,K,KW)
217.	CANOPY
218.	WORK LAMP
219.	REPAIR PARTS(COMPRESSOR)
220.	DRAWBAR HITCH
221.	POWER SUPPLY
273.	WEIGHT LOCK PIN
274.	SMV BRACKET
275.	SMV BRACKET(CABIN)

Fig. No.	Fig. Name
279.	MANUAL BRAKE
287.	CONTROLER(VSPEED)
288.	SMV BRACKET
289.	SMV BRACKET(CABIN)
290.	SMV EMBLEM
291.	SMV EMBLEM(SMALL)
307.	SWITCH(LIFT UP)
308.	REPAIR PARTS(DIFFERENTIAL LOCK PEDAL)
309.	REPAIR PARTS(GYRO SENSOR)

Fig.1. ENGINE MOUNT

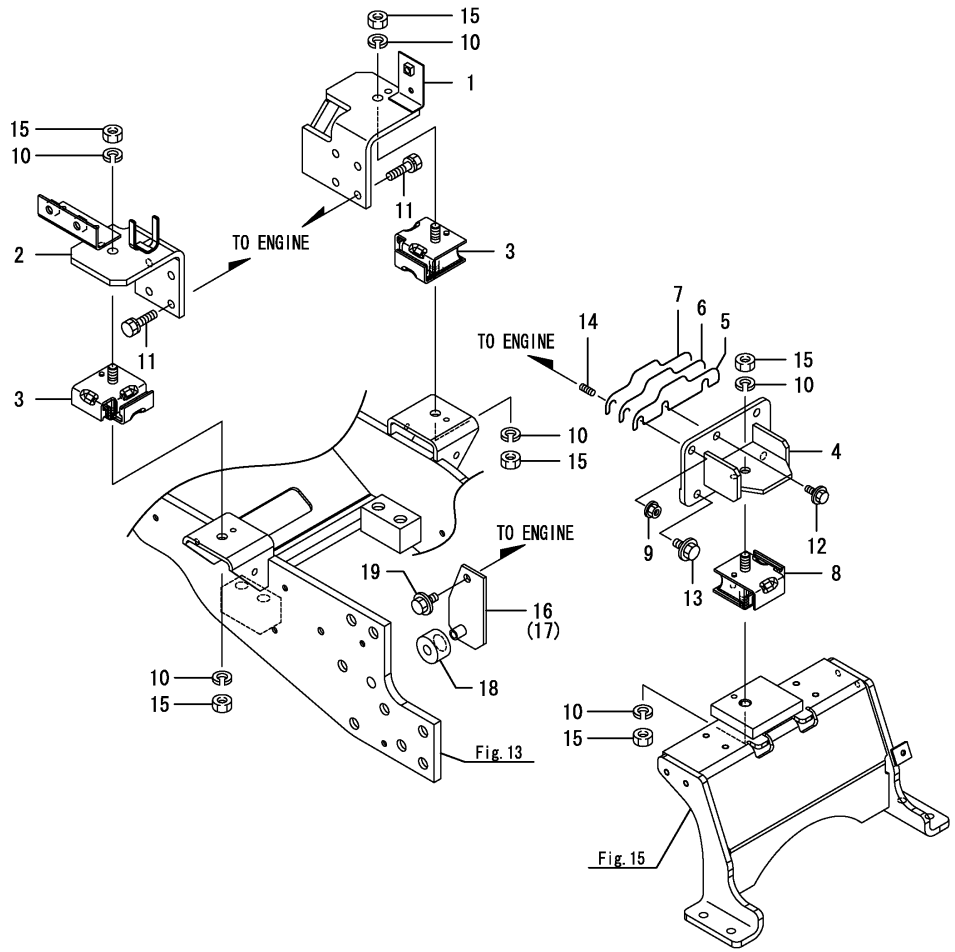

(A)=EG326Y (D)=EG334Y
(B)=EG328Y (E)=
(C)=EG330Y (F)=

No.	Lev.	Parts No.	Description	Q'ty (A)	(B)	(C)	(D)	(E)	(F)	I	R
1	1	1A7180-00191	MOUNT ASSY, ENGINE	1	1	1	1				
2	1	1A7180-00200	MOUNT ASSY, ENGINE	1	1	1	1				
3	1	1A7210-00230	CUSHION, 230	2	2	2	2				
4	1	1A7140-00250	MOUNT ASSY, ENGINE R	1	1	1	1				
5	1	1A7140-00290	SHIM, MOUNT REAR 0.1	1	1	1	1				
6	1	1A7140-00300	SHIM, T=0.7	1	1	1	1				
7	1	1A7140-00310	SHIM, MOUNT REAR 0.5	1	1	1	1				
8	1	1A7210-00450	CUSHION, 450	1	1	1	1				
9	1	194990-22140	NUT, M8	2	2	2	2				
10	1	22217-120000	WASHER, SPRING 12	6	6	6	6				
11	1	26013-100252	BOLT, M10X 25	8	8	8	8				
12	1	26106-080202	BOLT, M8X 20 PLATED	1	1	1	1				
13	1	26106-100202	BOLT, M10X 20 PLATED	2	2	2	2				
14	1	26216-080202	STUD, M8X 20	2	2	2	2				
15	1	26716-120002	NUT, M12	6	6	6	6				
16	1	1A7140-00400	MOUNT ASSY, SIDE L	1	1	1	1			W	
	(A=F090104)	(B=F080105)	(C=F070106)	(D=F060105)							
17	1	1A7140-00410	MOUNT ASSY, SIDE R	1	1	1	1			W	
	(A=F090104)	(B=F080105)	(C=F070106)	(D=F060105)							
18	1	1A7140-00460	CUSHION	2	2	2	2			W	
	(A=F090104)	(B=F080105)	(C=F070106)	(D=F060105)							
18-1	1	1A7140-00461	CUSHION	2	2	2	2			N	
	(A=F090264)	(B=F080242)	(C=F070530)	(D=F060497)							
19	1	26106-100162	BOLT, M10X 16 PLATED	2	2	2	2			W	
	(A=F090104)	(B=F080105)	(C=F070106)	(D=F060105)							

N:Old $\xleftarrow[\text{No}]{\text{Yes}}$ New, Q:Old $\xleftarrow[\text{Yes}]{\text{No}}$ New, R:Old $\xleftrightarrow[\text{Yes}]{\text{Yes}}$ New, S:Old $\xleftrightarrow[\text{No}]{\text{No}}$ New, W:Add, Z:Discontinued, F:Interchangeable by set, K:Q'ty Change

Copyright (C) 2014 YANMAR CO., LTD. All RightsReserved.

Fig.2. ENGINE RELATED

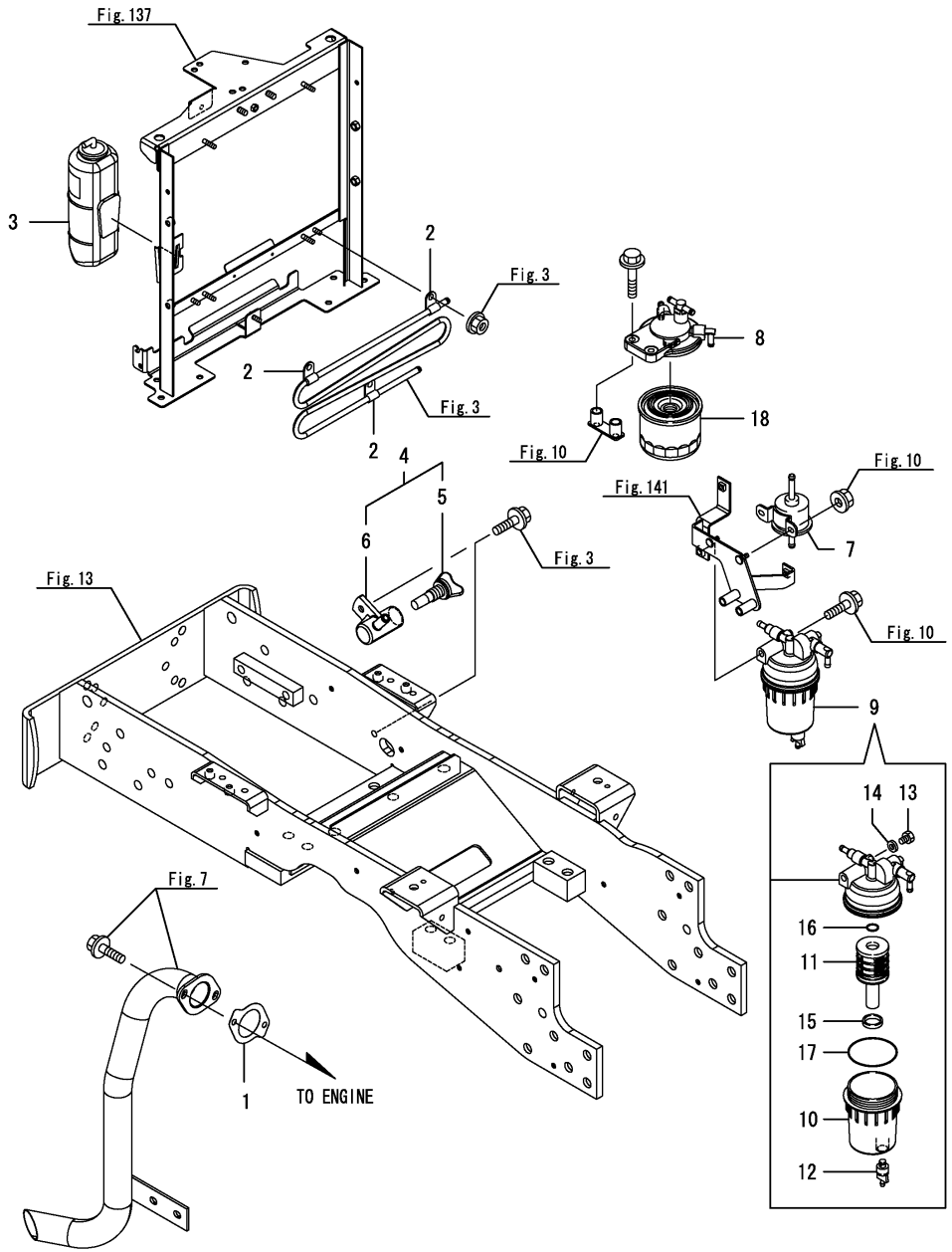

(A)=EG326Y (B)=EG328Y (C)=EG330Y (D)=EG334Y (E)= (F)=

No.	Lev.	Parts No.	Description	Q'ty (A)	(B)	(C)	(D)	(E)	(F)	I	R
1	1	129052-13550	GASKET	1	1	1	1				
2	1	124223-39900	RETAINER	3	3	3	3				
3	1	129263-44510	TANK ASSY, SUB	1	1	1	1				
4	1	129550-49101	COCK ASSY, 2-WAY	1	1	1	1				
5	2	129150-49081	COCK, DRAIN	1	1	1	1				
6	2	129550-49090	BODY, 2-WAY COCK	1	1	1	1				
7	1	119225-52102	PUMP ASSY, FUEL FEED	1	1	1	1				
8	1	129004-55612	BRACKET, FILTER	1	1	1	1				
9	1	129268-55700	SEPARATOR ASSY	1	1	1	1				
9-1	1	129268-55701	SEPARATOR ASSY	1	1	1	1			N	
	(A=F090142)	(B=F080138)	(C=F070231)	(D=F060223)							
10	2	129242-55720	CUP	1	1	1	1				
11	2	129242-55730	ELEMENT	1	1	1	1				
12	2	129242-55740	PLUG, DRAIN	1	1	1	1				
13	2	129242-55750	VALVE, AIR VENT	1	1	1	1				
14	2	129242-55760	GASKET	1	1	1	1				
15	2	129242-55770	FLOAT	1	1	1	1				
16	2	24311-000160	O-RING, 1AP16.0	1	1	1	1				
17	2	24321-000750	O-RING, 1AG75.0	1	1	1	1				
18	1	119802-55801	FILTER, FUEL	1	1	1	1				

N:Old $\xleftarrow[\text{No}]{\text{Yes}}$ New, Q:Old $\xleftarrow[\text{Yes}]{\text{No}}$ New, R:Old $\xleftarrow[\text{Yes}]{\text{Yes}}$ New, S:Old $\xleftarrow[\text{No}]{\text{No}}$ New, W:Add, Z:Discontinued, F:Interchangeable by set, K:Q'ty Change

Copyright (C) 2014 YANMAR CO., LTD. All RightsReserved.

Fig.3. ENGINE ACCESSORIES

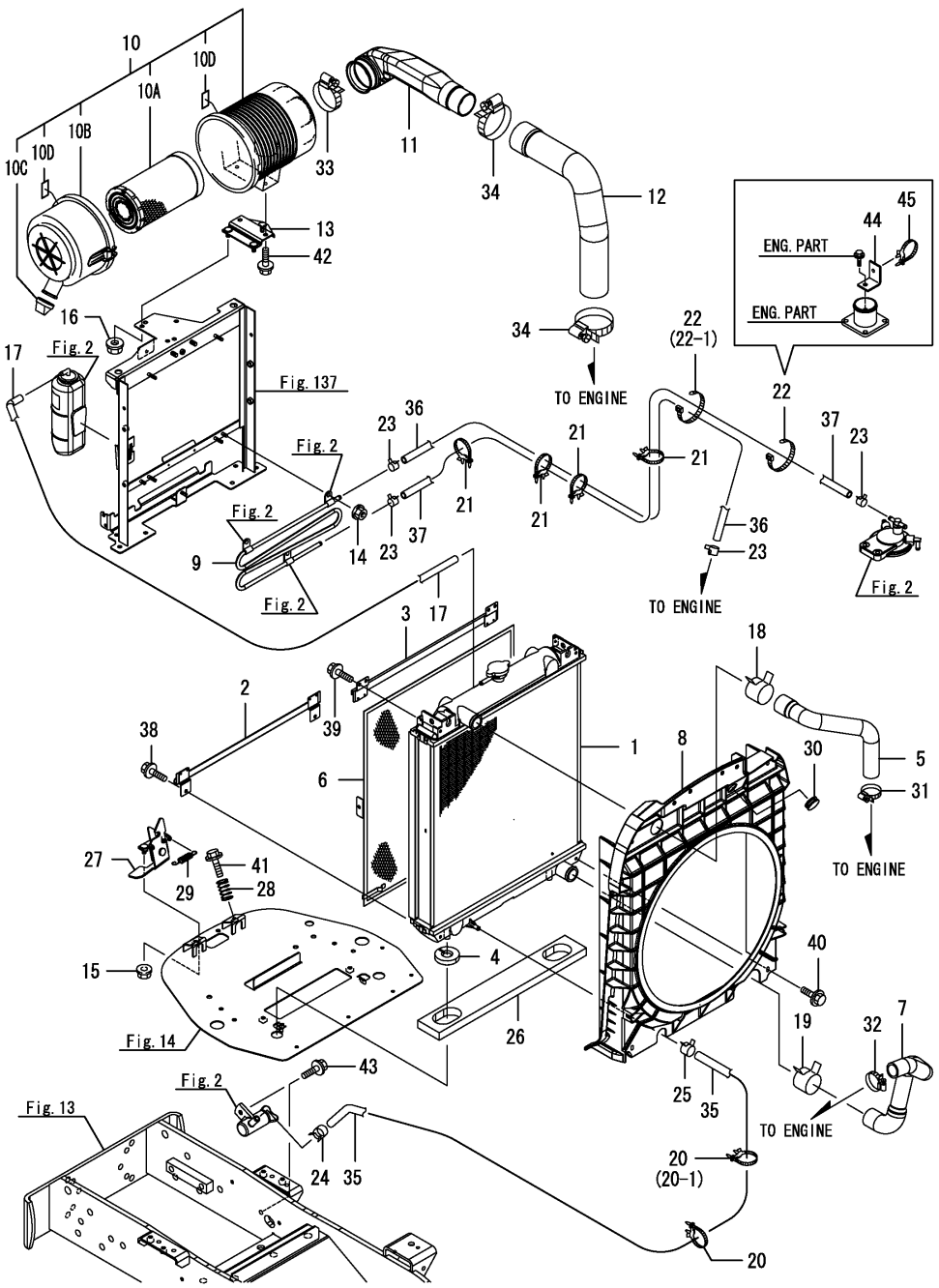

(A)=EG326Y (D)=EG334Y
(B)=EG328Y (E)=
(C)=EG330Y (F)=

No.	Lev.	Parts No.	Description	Q'ty (A)	(B)	(C)	(D)	(E)	(F)	I	R
1	1	1A7140-00600	RADIATOR ASSY	1	1	1	1				
2	1	1A7180-01000	RAIL, RADIATOR LOWER	1	1	1	1				
3	1	1A7180-01030	RAIL, RADIATOR UPPER	1	1	1	1				
4	1	1A7180-01050	RUBBER, ABSORBER	2	2	2	2				
5	1	1A7260-01210	PIPE, WATER A	1	1	1	1				
6	1	1A7180-01222	SCREEN, RADIATOR	1	1	1	1				
7	1	1A7260-01220	PIPE, WATER B	1	1	1	1				
8	1	1A7140-01500	SHROUD ASSY, FAN M	1	1	1	1				
8-1	1	1A7140-01501	SHROUD M ASSY, FAN	1	1	1	1			N	
	(A=F090216)	(B=F080203)	(C=F070432) (D=F060424)								
9	1	1A7180-04950	COOLER, FUEL	1	1	1	1				
10	1	1A7140-05100	CLEANER, AIR 5 INCH	1	1	1	1				
10A	2	119808-12520	ELEMENT	1	1	1	1				
10B	2	119866-12541	COVER ASSY	1	1	1	1				
10C	2	119808-12540	VALVE, UNLOADER	1	1	1	1				
10D	2	129418-12530	LABEL, MARK	2	2	2	2				
11	1	1A7140-06201	PIPE, AIR INTAKE A	1	1	1	1				
12	1	1A7180-06220	PIPE, AIR INTAKE B	1	1	1	1				
13	1	1A7140-06300	STAY, AIR CLEANER	1	1	1	1				
14	1	194990-22130	NUT, M6	3	3	3	3				
15	1	194990-22140	NUT, M8	2	2	2	2				
16	1	194990-22140	NUT, M8	3	3	3	3				
17	1	121750-49150	PIPE, WATER DRAIN	1	1	1	1				
18	1	175022-49750	CLIP 37, HOSE	1	1	1	1				
19	1	175022-49750	CLIP 37, HOSE	1	1	1	1				
20	1	194680-51670	BAND, CLIP	2	2	2	2				
20-1	1	194680-51670	BAND, CLIP	1	1	1	1			K	
	(A=F090204)	(B=F080194)	(C=F070272) (D=F060261)								
21	1	194680-51670	BAND, CLIP	4	4	4	4				
22	1	29622-140001	BAND, RF140	2	2	2	2				
22-1	1	29622-140001	BAND, RF140	1	1	1	1			K	
	(A=F090103)	(B=F080104)	(C=F070104) (D=F060104)								
23	1	114270-59010	CLIP, HOSE 12	4	4	4	4				
24	1	114270-59010	CLIP, HOSE 12	1	1	1	1				
25	1	114270-59010	CLIP, HOSE 12	1	1	1	1				
26	1	1A7260-60860	PAD, RADIATOR	1	1	1	1				
26-1	1	1A7601-53920	URETHANE, SIDE LAMP	1	1	1	1			N	
	(A=F090519)	(B=F080423)	(C=F071152) (D=F061063)								
27	1	1A7180-61250	LOCK ASSY, BONNET	1	1	1	1				
28	1	198220-61340	SPRING	2	2	2	2				
29	1	198230-61960	SPRING	1	1	1	1				
30	1	194180-61980	GROMMET, 24	1	1	1	1				
31	1	23000-035000	CLAMP, 35	1	1	1	1				
32	1	23000-035000	CLAMP, 35	1	1	1	1				
33	1	23000-060000	CLAMP, 60	1	1	1	1				
34	1	23000-070000	CLAMP, 70	2	2	2	2				
35	1	23980-730510	HOSE, 7.3X 510	1	1	1	1				
35-1	1	1A7180-01800	HOSE, BLADE DRAIN	1	1	1	1			N	
	(A=F090204)	(B=F080194)	(C=F070272) (D=F060261)								
36	1	23980-730780	HOSE, 7.3X 780	1	1	1	1				
37	1	23980-731080	HOSE, 7.3X1080	1	1	1	1				

N:Old $\overset{\text{Yes}}{\underset{\text{No}}{\leftrightarrow}}$ New, Q:Old $\overset{\text{No}}{\underset{\text{Yes}}{\leftrightarrow}}$ New, R:Old $\overset{\text{Yes}}{\underset{\text{Yes}}{\leftrightarrow}}$ New, S:Old $\overset{\text{No}}{\underset{\text{No}}{\leftrightarrow}}$ New, W:Add, Z:Discontinued, F:Interchangeable by set, K:Q'ty Change

++ CONTINUE ++

Copyright (C) 2014 YANMAR CO., LTD. All RightsReserved.

Fig.3. ENGINE ACCESSORIES

(A)=EG326Y (B)=EG328Y (C)=EG330Y (D)=EG334Y (E)= (F)=

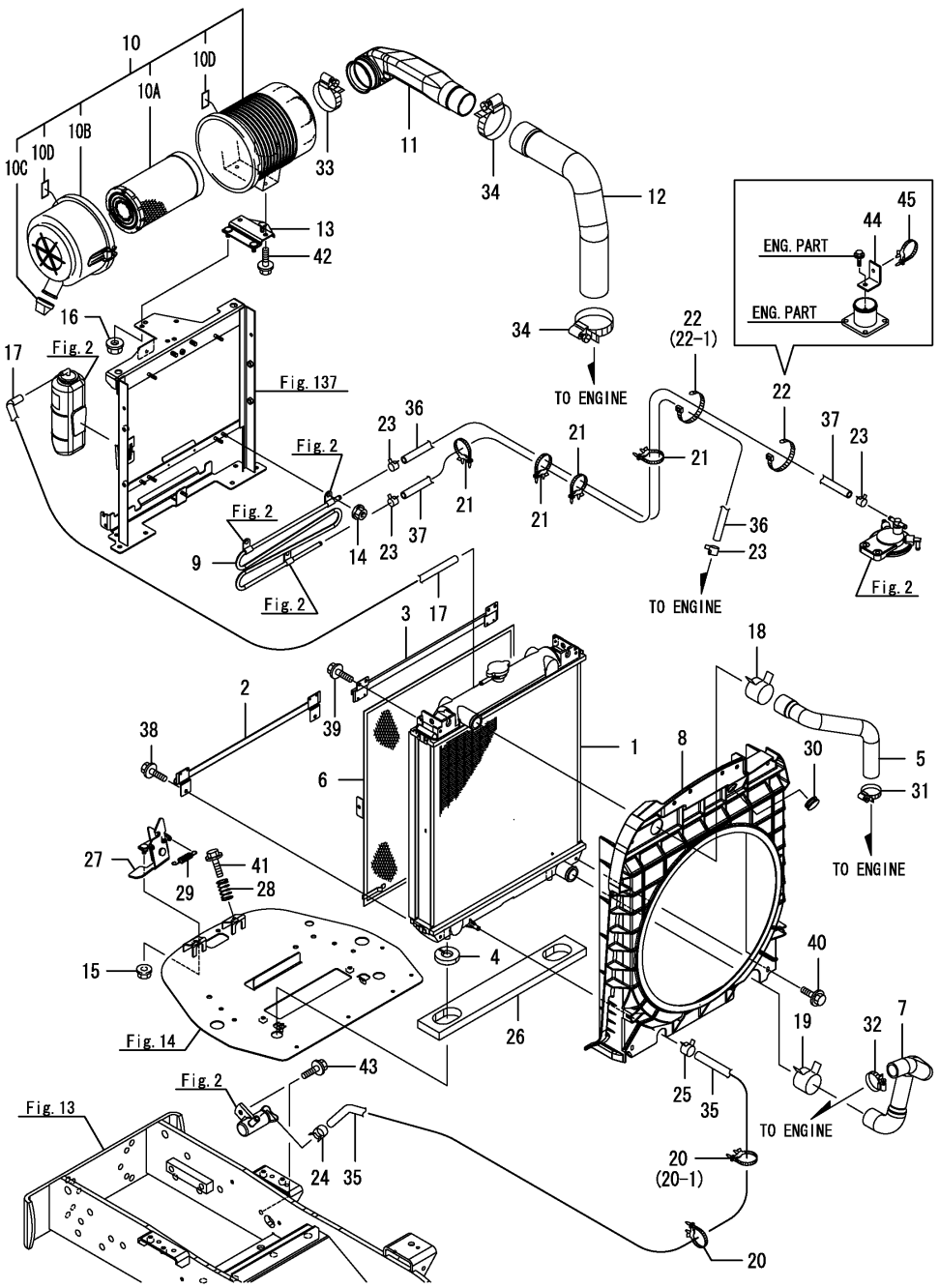

No.	Lev.	Parts No.	Description	Q'ty (A)	(B)	(C)	(D)	(E)	(F)	I	R
38	1	26106-060122	BOLT, M6X 12 PLATED	2	2	2	2				
39	1	26106-060122	BOLT, M6X 12 PLATED	2	2	2	2				
40	1	26106-060202	BOLT, M6X 20 PLATED	4	4	4	4				
41	1	26106-060202	BOLT, M6X 20 PLATED	2	2	2	2				
42	1	26106-080162	BOLT, M8X 16 PLATED	2	2	2	2				
43	1	26106-080202	BOLT, M8X 20 PLATED	1	1	1	1				
44	1	1A7210-04700	STAY, FUEL HOSE	1	1	1	1				W
	(A=F090103)	(B=F080104)	(C=F070104) (D=F060104)								
45	1	194680-51670	BAND, CLIP	1	1	1	1				W
	(A=F090103)	(B=F080104)	(C=F070104) (D=F060104)								
45-1	1	198448-51910	CLIP, BAND	1	1	1	1				N
	(A=F090102)	(B=F080101)	(C=F070102) (D=F060101)								

N:Old $\frac{\text{Yes}}{\text{No}}$ New, Q:Old $\frac{\text{No}}{\text{Yes}}$ New, R:Old $\frac{\text{Yes}}{\text{Yes}}$ New, S:Old $\frac{\text{No}}{\text{No}}$ New, W:Add, Z:Discontinued, F:Interchangeable by set, K:Q'ty Change

Copyright (C) 2014 YANMAR CO., LTD. All RightsReserved.

Fig.4. ENGINE ACCESSORIES(CABIN)

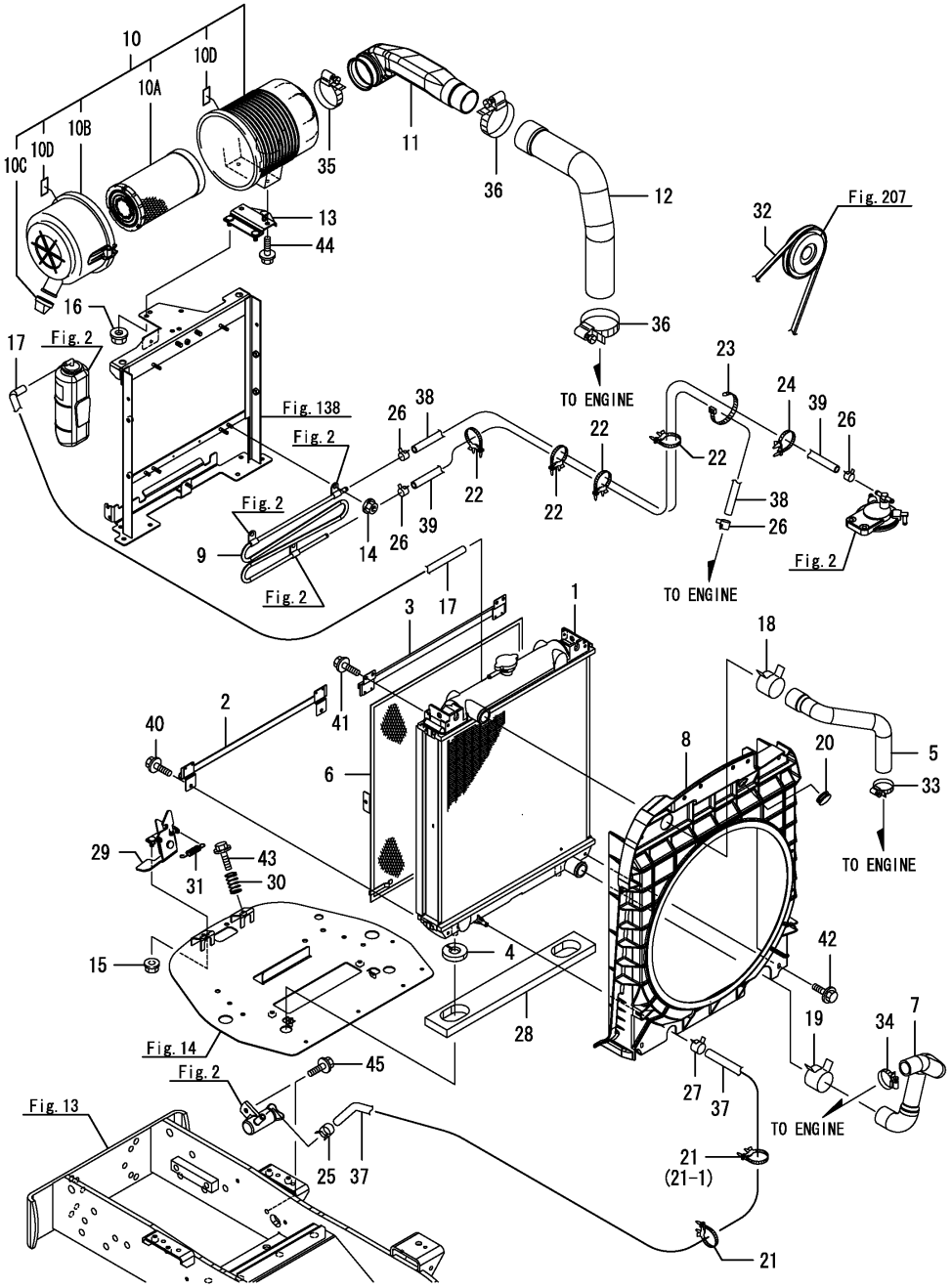

(A)=EG326Y (D)=EG334Y
(B)=EG328Y (E)=
(C)=EG330Y (F)=

No.	Lev.	Parts No.	Description	Q'ty (A)	(B)	(C)	(D)	(E)	(F)	I	R
1	1	1A7140-00600	RADIATOR ASSY	1	1	1	1				
2	1	1A7180-01000	RAIL, RADIATOR LOWER	1	1	1	1				
3	1	1A7180-01030	RAIL, RADIATOR UPPER	1	1	1	1				
4	1	1A7180-01050	RUBBER, ABSORBER	2	2	2	2				
5	1	1A7260-01210	PIPE, WATER A	1	1	1	1				
6	1	1A7180-01222	SCREEN, RADIATOR	1	1	1	1				
7	1	1A7260-01220	PIPE, WATER B	1	1	1	1				
8	1	1A7140-01500	SHROUD ASSY, FAN M	1	1	1	1				
8-1	1	1A7140-01501	SHROUD M ASSY, FAN	1	1	1	1			N	
	(A=F090216)	(B=F080203)	(C=F070432) (D=F060424)								
9	1	1A7180-04950	COOLER, FUEL	1	1	1	1				
10	1	1A7140-05100	CLEANER, AIR 5 INCH	1	1	1	1				
10A	2	119808-12520	ELEMENT	1	1	1	1				
10B	2	119866-12541	COVER ASSY	1	1	1	1				
10C	2	119808-12540	VALVE, UNLOADER	1	1	1	1				
10D	2	129418-12530	LABEL, MARK	2	2	2	2				
11	1	1A7140-06201	PIPE, AIR INTAKE A	1	1	1	1				
12	1	1A7180-06220	PIPE, AIR INTAKE B	1	1	1	1				
13	1	1A7140-06300	STAY, AIR CLEANER	1	1	1	1				
14	1	194990-22130	NUT, M6	3	3	3	3				
15	1	194990-22140	NUT, M8	2	2	2	2				
16	1	194990-22140	NUT, M8	3	3	3	3				
17	1	121750-49150	PIPE, WATER DRAIN	1	1	1	1				
18	1	175022-49750	CLIP 37, HOSE	1	1	1	1				
19	1	175022-49750	CLIP 37, HOSE	1	1	1	1				
20	1	194170-51210	GROMMET	1	1	1	1				
21	1	194680-51670	BAND, CLIP	2	2	2	2				
21-1	1	194680-51670	BAND, CLIP	1	1	1	1			K	
	(A=F090204)	(B=F080194)	(C=F070272) (D=F060261)								
22	1	194680-51670	BAND, CLIP	4	4	4	4				
23	1	29622-140001	BAND, RF140	1	1	1	1				
24	1	198448-51910	CLIP, BAND	1	1	1	1				
25	1	114270-59010	CLIP, HOSE 12	1	1	1	1				
26	1	114270-59010	CLIP, HOSE 12	4	4	4	4				
27	1	114270-59010	CLIP, HOSE 12	1	1	1	1				
28	1	1A7260-60860	PAD, RADIATOR	1	1	1	1				
28-1	1	1A7601-53920	URETHANE, SIDE LAMP	1	1	1	1			N	
	(A=F090519)	(B=F080423)	(C=F071152) (D=F061063)								
29	1	1A7180-61250	LOCK ASSY, BONNET	1	1	1	1				
30	1	198220-61340	SPRING	2	2	2	2				
31	1	198230-61960	SPRING	1	1	1	1				
32	1	129054-96150	V-BELT, A54.5	1	1	1	1				
33	1	23000-035000	CLAMP, 35	1	1	1	1				
34	1	23000-035000	CLAMP, 35	1	1	1	1				
35	1	23000-060000	CLAMP, 60	1	1	1	1				
36	1	23000-070000	CLAMP, 70	2	2	2	2				
37	1	23980-730510	HOSE, 7.3X 510	1	1	1	1				
37-1	1	1A7180-01800	HOSE, BLADE DRAIN	1	1	1	1			N	
	(A=F090204)	(B=F080194)	(C=F070272) (D=F060261)								
38	1	23980-730780	HOSE, 7.3X 780	1	1	1	1				
39	1	23980-731080	HOSE, 7.3X1080	1	1	1	1				

N:Old $\overset{\text{Yes}}{\underset{\text{No}}{\leftrightarrow}}$ New, Q:Old $\overset{\text{No}}{\underset{\text{Yes}}{\leftrightarrow}}$ New, R:Old $\overset{\text{Yes}}{\underset{\text{Yes}}{\leftrightarrow}}$ New, S:Old $\overset{\text{No}}{\underset{\text{No}}{\leftrightarrow}}$ New, W:Add, Z:Discontinued, F:Interchangeable by set, K:Q'ty Change

++ CONTINUE ++

Copyright (C) 2014 YANMAR CO., LTD. All RightsReserved.

Fig.4. ENGINE ACCESSORIES(CABIN)

(A)=EG326Y
(B)=EG328Y
(C)=EG330Y
(D)=EG334Y
(E)=
(F)=

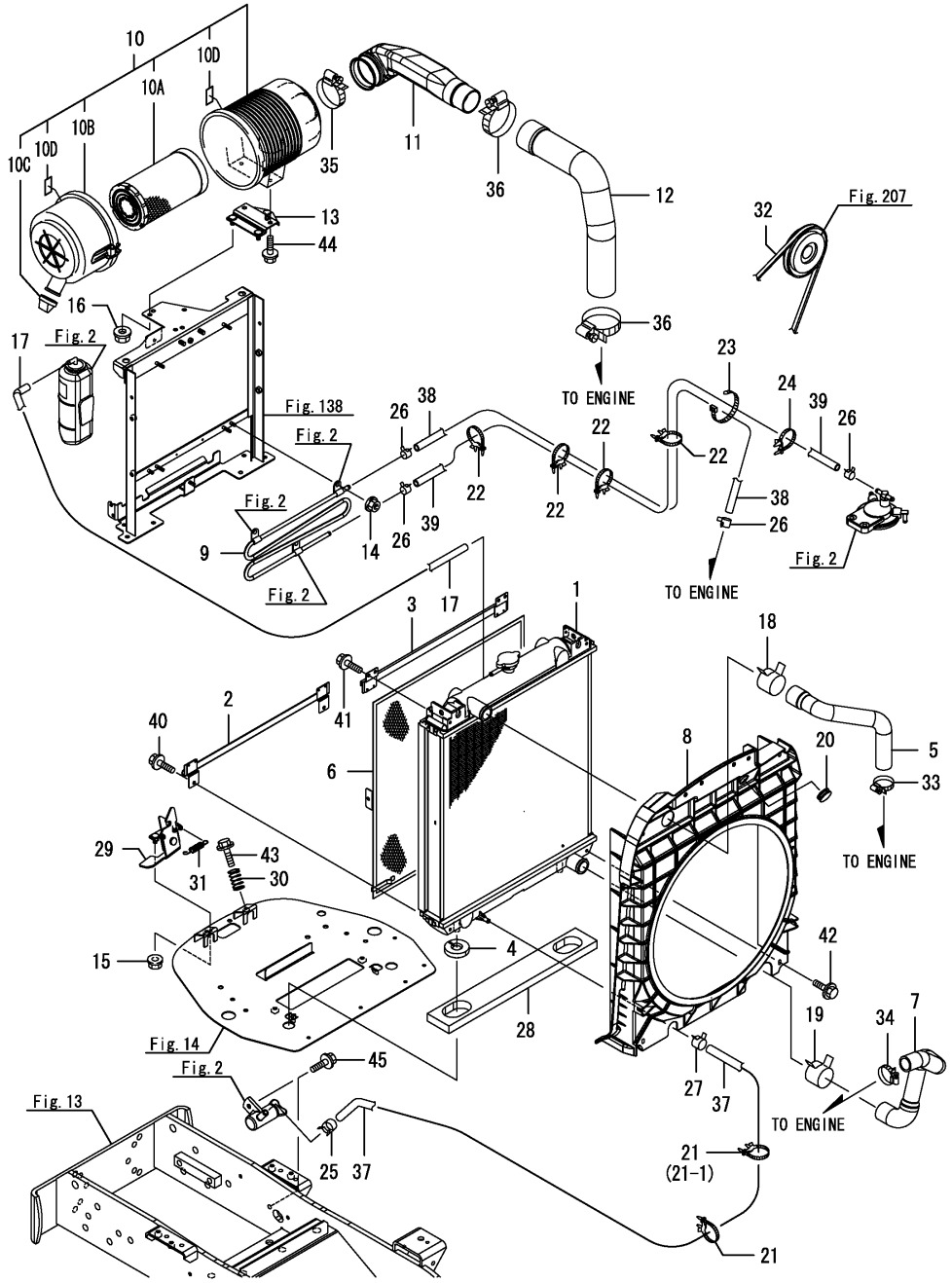

No.	Lev.	Parts No.	Description	Q'ty (A)	(B)	(C)	(D)	(E)	(F)	I	R
40	1	26106-060122	BOLT, M6X 12 PLATED	2	2	2	2				
41	1	26106-060122	BOLT, M6X 12 PLATED	2	2	2	2				
42	1	26106-060202	BOLT, M6X 20 PLATED	4	4	4	4				
43	1	26106-060202	BOLT, M6X 20 PLATED	2	2	2	2				
44	1	26106-080162	BOLT, M8X 16 PLATED	2	2	2	2				
45	1	26106-080202	BOLT, M8X 20 PLATED	1	1	1	1				

N:Old $\xleftarrow[\text{No}]{\text{Yes}}$ New, Q:Old $\xleftarrow[\text{Yes}]{\text{No}}$ New, R:Old $\xleftarrow[\text{Yes}]{\text{Yes}}$ New, S:Old $\xleftarrow[\text{No}]{\text{No}}$ New, W:Add, Z:Discontinued, F:Interchangeable by set, K:Q'ty Change

Copyright (C) 2014 YANMAR CO., LTD. All RightsReserved.

Fig.292. ENGINE ACCESSORIES(A,K,KW,KWA)

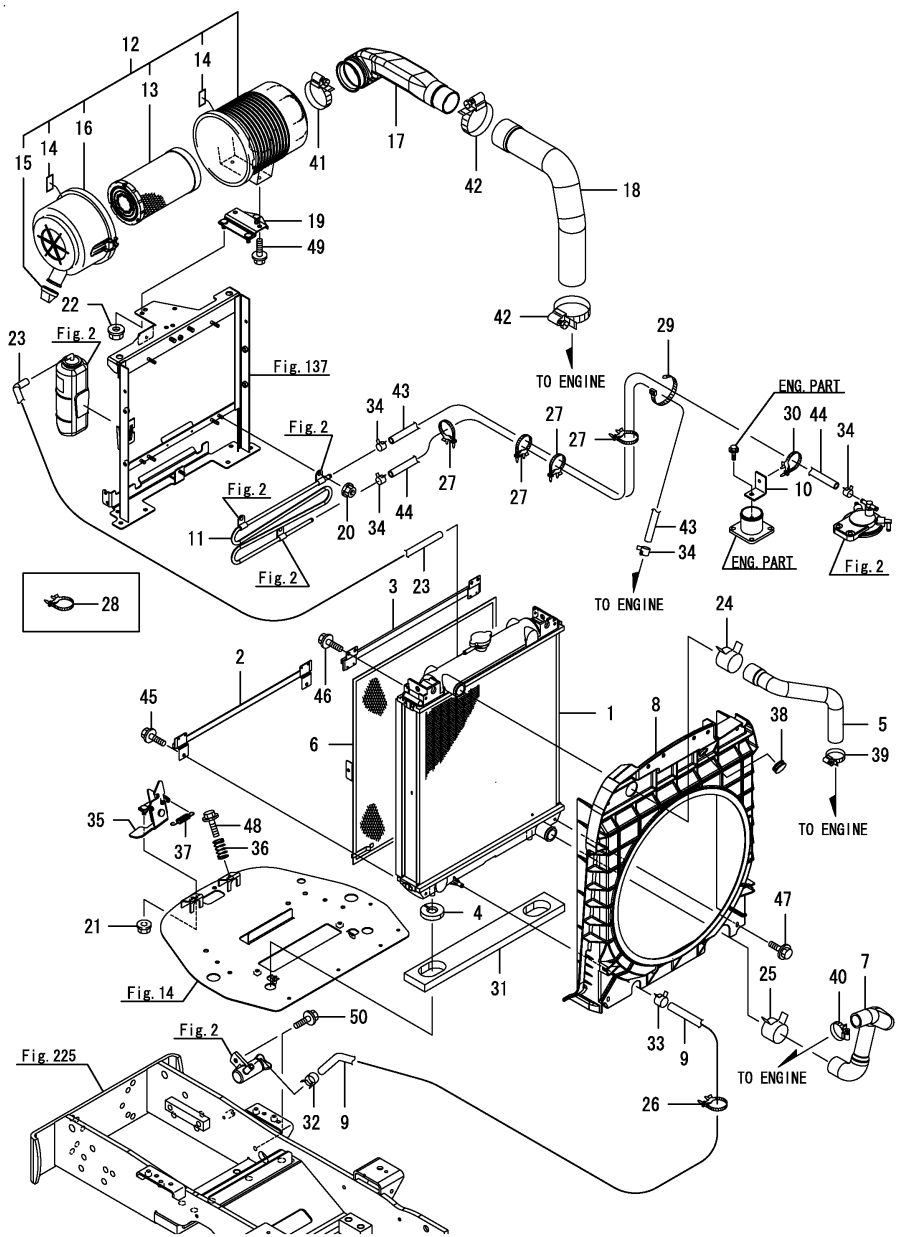

Remarks
* Applied to the following models.
EG330A, EG330K, EG330KW, EG334A, EG334KW, EG334KWA

(A)=EG326Y (D)=EG334Y
(B)=EG328Y (E)=
(C)=EG330Y (F)=

No.	Lev.	Parts No.	Description	Q'ty (A)	(B)	(C)	(D)	(E)	(F)	I	R
1	1	1A7140-00600	RADIATOR ASSY			1	1				
2	1	1A7180-01000	RAIL, RADIATOR LOWER			1	1				
3	1	1A7180-01030	RAIL, RADIATOR UPPER			1	1				
4	1	1A7180-01050	RUBBER, ABSORBER			2	2				
5	1	1A7260-01210	PIPE, WATER A			1	1				
6	1	1A7180-01222	SCREEN, RADIATOR			1	1				
7	1	1A7260-01220	PIPE, WATER B			1	1				
8	1	1A7140-01501	SHROUD M ASSY, FAN			1	1				
9	1	1A7180-01800	HOSE, BLADE DRAIN			1	1				
10	1	1A7210-04700	STAY, FUEL HOSE			1	1				
11	1	1A7180-04950	COOLER, FUEL			1	1				
12	1	1A7140-05100	CLEANER, AIR 5 INCH			1	1				
13	2	119808-12520	ELEMENT			1	1				
14	2	129418-12530	LABEL, MARK			2	2				
15	2	119808-12540	VALVE, UNLOADER			1	1				
16	2	119866-12541	COVER ASSY			1	1				
17	1	1A7140-06201	PIPE, AIR INTAKE A			1	1				
18	1	1A7180-06220	PIPE, AIR INTAKE B			1	1				
19	1	1A7140-06300	STAY, AIR CLEANER			1	1				
20	1	194990-22130	NUT, M6			3	3				
21	1	194990-22140	NUT, M8			2	2				
22	1	194990-22140	NUT, M8			3	3				
23	1	121750-49150	PIPE, WATER DRAIN			1	1				
24	1	175022-49750	CLIP 37, HOSE			1	1				
25	1	175022-49750	CLIP 37, HOSE			1	1				
26	1	194680-51670	BAND, CLIP			1	1				
27	1	194680-51670	BAND, CLIP			4	4				
28	1	194680-51670	BAND, CLIP			2	2				
29	1	194680-51670	BAND, CLIP			1	1				
30	1	198448-51910	CLIP, BAND			1	1				
31	1	1A7260-60860	PAD, RADIATOR			1	1				
31-1	1	1A7601-53920	URETHANE, SIDE LAMP (C=F071152) (D=F061063)			1	1			N	
32	1	114270-59010-1	CLAMP, HOSE 12			1	1				
33	1	114270-59010-1	CLAMP, HOSE 12			1	1				
34	1	114270-59010-1	CLAMP, HOSE 12			4	4				
35	1	1A7180-61250	LOCK ASSY, BONNET			1	1				
36	1	198220-61340	SPRING			2	2				
37	1	198230-61960	SPRING			1	1				
38	1	194180-61980	GROMMET, 24			1	1				
39	1	23000-035000	CLAMP, 35			1	1				
40	1	23000-035000	CLAMP, 35			1	1				
41	1	23000-060000	CLAMP, 60			1	1				
42	1	23000-070000	CLAMP, 70			2	2				
43	1	23980-730780	HOSE, 7.3X 780			1	1				
44	1	23980-731080	HOSE, 7.3X1080			1	1				
45	1	26106-060122	BOLT, M6X 12 PLATED			2	2				
46	1	26106-060122	BOLT, M6X 12 PLATED			2	2				
47	1	26106-060202	BOLT, M6X 20 PLATED			4	4				
48	1	26106-060202	BOLT, M6X 20 PLATED			2	2				
49	1	26106-080162	BOLT, M8X 16 PLATED			2	2				

N:Old $\overset{\text{Yes}}{\underset{\text{No}}{\leftrightarrow}}$ New, Q:Old $\overset{\text{No}}{\underset{\text{Yes}}{\leftrightarrow}}$ New, R:Old $\overset{\text{Yes}}{\underset{\text{Yes}}{\leftrightarrow}}$ New, S:Old $\overset{\text{No}}{\underset{\text{No}}{\leftrightarrow}}$ New, W:Add, Z:Discontinued, F:Interchangeable by set, K:Q'ty Change

++ CONTINUE ++

Copyright (C) 2014 YANMAR CO., LTD. All RightsReserved.

Fig.292. ENGINE ACCESSORIES(A,K,KW,KWA)

(A)=EG326Y
(B)=EG328Y
(C)=EG330Y
(D)=EG334Y
(E)=
(F)=

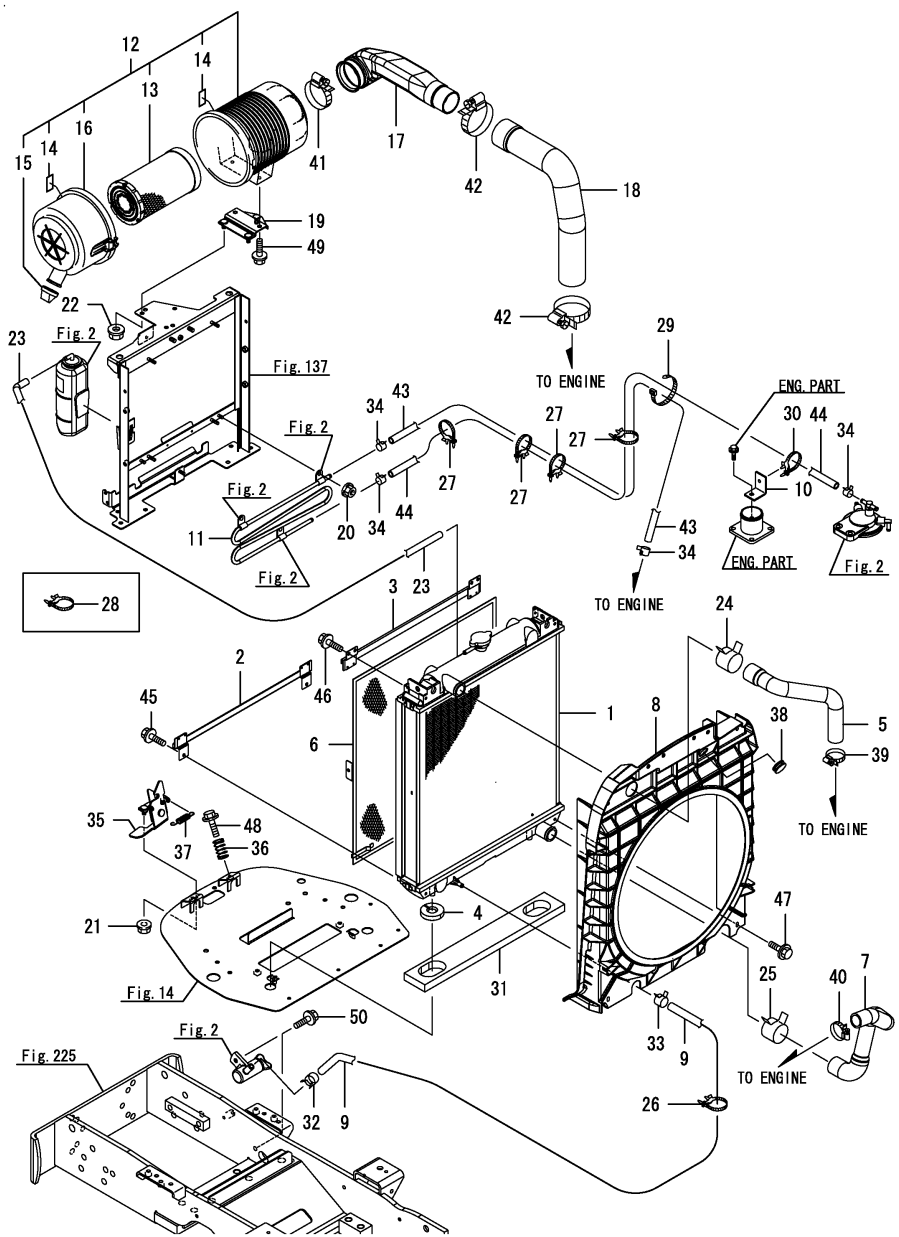

No.	Lev.	Parts No.	Description	Q'ty (A)	(B)	(C)	(D)	(E)	(F)	I	R
50	1	26106-080202	BOLT, M8X 20 PLATED			1	1				

Remarks
* Applied to the following models.
EG330A, EG330K, EG330KW, EG334A, EG334KW, EG334KWA

N:Old ←Yes/No→ New, Q:Old ←No/Yes→ New, R:Old ←Yes/Yes→ New, S:Old ←No/No→ New, W:Add, Z:Discontinued, F:Interchangeable by set, K:Q'ty Change

Copyright (C) 2014 YANMAR CO., LTD. All RightsReserved.

Fig.5. ACCEL LEVER

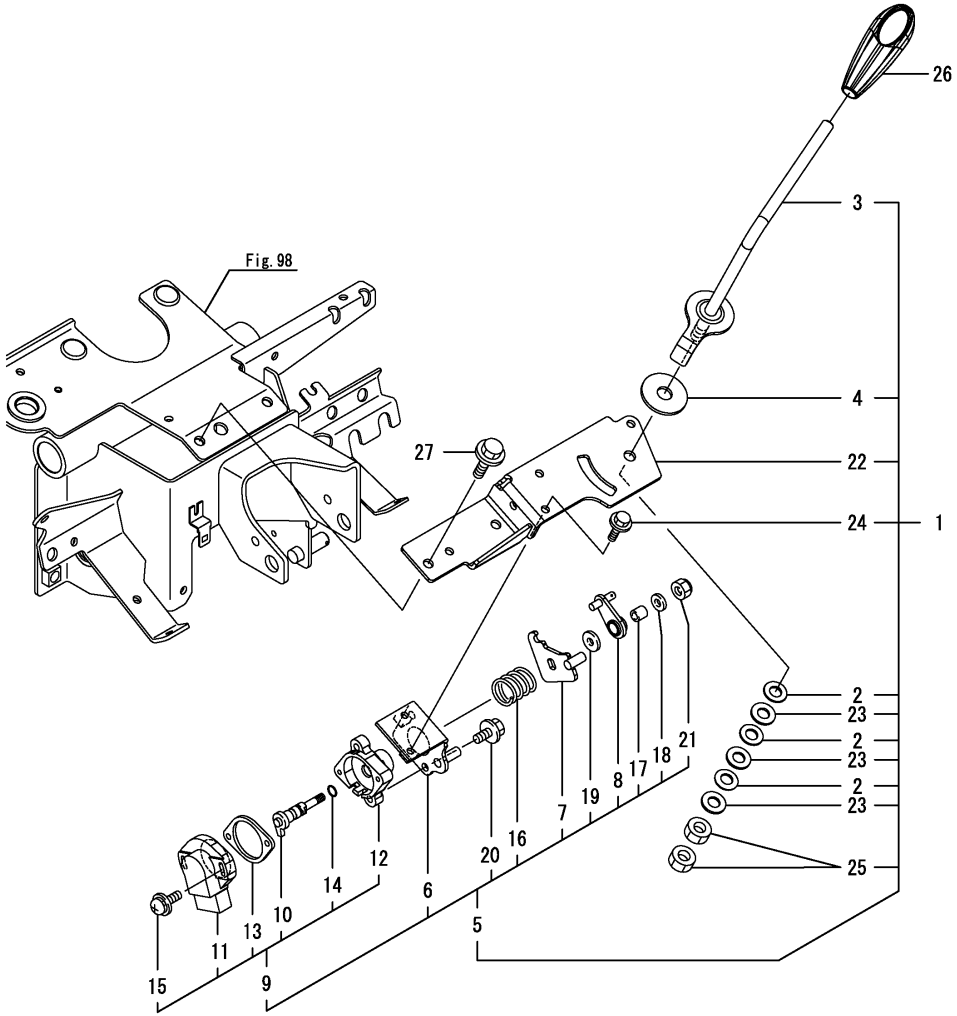

(A)=EG326Y
(B)=EG328Y
(C)=EG330Y
(D)=EG334Y
(E)=
(F)=

No.	Lev.	Parts No.	Description	Q'ty (A)	(B)	(C)	(D)	(E)	(F)	I	R
1	1	1A7180-01100	LEVER, ACCELERATOR	1	1	1	1				
2	2	194740-00160	SPRING, 10	3	3	3	3				
3	2	1A7180-01110	LEVER, ACCELERATOR	1	1	1	1				
4	2	198165-01130	PLATE, FRICTION	1	1	1	1				
5	2	1A7890-01350	SENSOR ASSY	1	1	1	1				
6	3	198094-01260	BRACKET, SENSOR	1	1	1	1				
7	3	1A7890-01360	ARM, SENSOR	1	1	1	1				
8	3	1A7890-01410	ARM ASSY, SENSOR	1	1	1	1				
9	3	1A7890-01460	SENSOR ASSY	1	1	1	1				
10	4	1A7890-01380	SHAFT ASSY, SENSOR	1	1	1	1				
11	4	185100-50070	BODY	1	1	1	1				
12	4	129054-77811	SUPPORT	1	1	1	1				
13	4	129054-77820	GASKET	1	1	1	1				
14	4	24311-000070	O-RING, 1AP7.0	1	1	1	1				
15	4	26023-040202	SCREW, M4X20	2	2	2	2				
16	3	119060-61990	SPRING, RETURN	1	1	1	1				
17	3	198129-78710	SPACER, 6-10	1	1	1	1				
18	3	22137-060000	WASHER, 6	1	1	1	1				
19	3	22157-060000	WASHER, 6	1	1	1	1				
20	3	26106-060122	BOLT, M6X 12 PLATED	2	2	2	2				
21	3	26347-060002	NUT, M6	1	1	1	1				
22	2	1A7180-02160	BRACKET, AXLE	1	1	1	1				
23	2	22137-100000	WASHER, 10	3	3	3	3				
24	2	26106-060122	BOLT, M6X 12 PLATED	2	2	2	2				
25	2	26716-100002	NUT, M10	2	2	2	2				
26	1	1A7690-01230	KNOB, LEVER	1	1	1	1				
27	1	26106-080122	BOLT, M8X 12 PLATED	2	2	2	2				

N:Old $\frac{\text{Yes}}{\text{No}}$ New, Q:Old $\frac{\text{No}}{\text{Yes}}$ New, R:Old $\frac{\text{Yes}}{\text{Yes}}$ New, S:Old $\frac{\text{No}}{\text{No}}$ New, W:Add, Z:Discontinued, F:Interchangeable by set, K:Q'ty Change

Copyright (C) 2014 YANMAR CO., LTD. All RightsReserved.

Fig.6. FOOT ACCEL

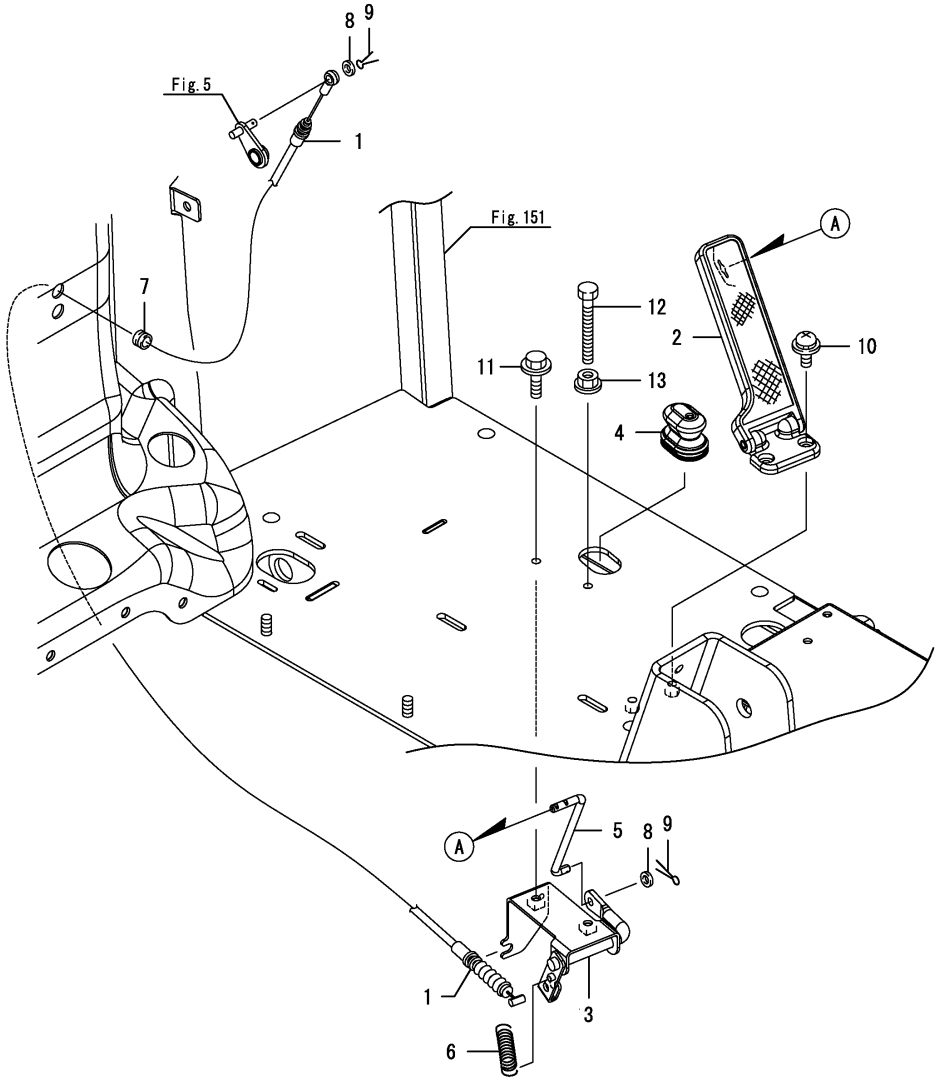

(A)=EG326Y (D)=EG334Y
(B)=EG328Y (E)=
(C)=EG330Y (F)=

No.	Lev.	Parts No.	Description	Q'ty (A)	(B)	(C)	(D)	(E)	(F)	I	R
1	1	1A7180-01150	CABLE ASSY	1	1	1	1				
2	1	1A7480-01201	PEDAL, THROTTLE	1	1	1	1				
3	1	1A7180-01300	ACCELERATOR, FOOT	1	1	1	1				
4	1	1A7180-01310	BOOT	1	1	1	1				
5	1	1A7180-01330	ROD, ACCELERATOR	1	1	1	1				
6	1	198360-55630	SPRING, RETURN	1	1	1	1				
7	1	198071-58810	GROMMET, 8	1	1	1	1				
8	1	22137-060000	WASHER, 6	2	2	2	2				
9	1	22417-160180	PIN, COTTER 1.6X18	2	2	2	2				
10	1	26023-060202	SCREW, M6X20	2	2	2	2				
11	1	26106-060122	BOLT, M6X 12 PLATED	1	1	1	1				
12	1	26116-060504	BOLT, M6X 50 PLATED	1	1	1	1				
13	1	26366-060002	NUT, M6	1	1	1	1				

N:Old $\xleftarrow[\text{No}]{\text{Yes}}$ New, Q:Old $\xleftarrow[\text{Yes}]{\text{No}}$ New, R:Old $\xleftarrow[\text{Yes}]{\text{Yes}}$ New, S:Old $\xleftarrow[\text{No}]{\text{No}}$ New, W:Add, Z:Discontinued, F:Interchangeable by set, K:Q'ty Change

Copyright (C) 2014 YANMAR CO., LTD. All RightsReserved.

Fig.7. EXHAUST PORT

(A)=EG326Y (D)=EG334Y
(B)=EG328Y (E)=
(C)=EG330Y (F)=

No.	Lev.	Parts No.	Description	Q'ty (A)	(B)	(C)	(D)	(E)	(F)	I	R
1	1	1A7180-03110	PIPE, EXHAUST	1	1	1	1				
1-1	1	1A7140-03110	PIPE, EXHAUST	1	1	1	1			N	
	(A=F090103)	(B=F080104)	(C=F070104) (D=F060104)								
1-2	1	1A7140-03111	PIPE, EXHAUST	1	1	1	1			N	
	(A=F090266)	(B=F080243)	(C=F070532) (D=F060499)								
2	1	26106-080252	BOLT, M8X 25 PLATED	2	2	2	2				
3	1	26106-100162	BOLT, M10X 16 PLATED	2	2	2	2				

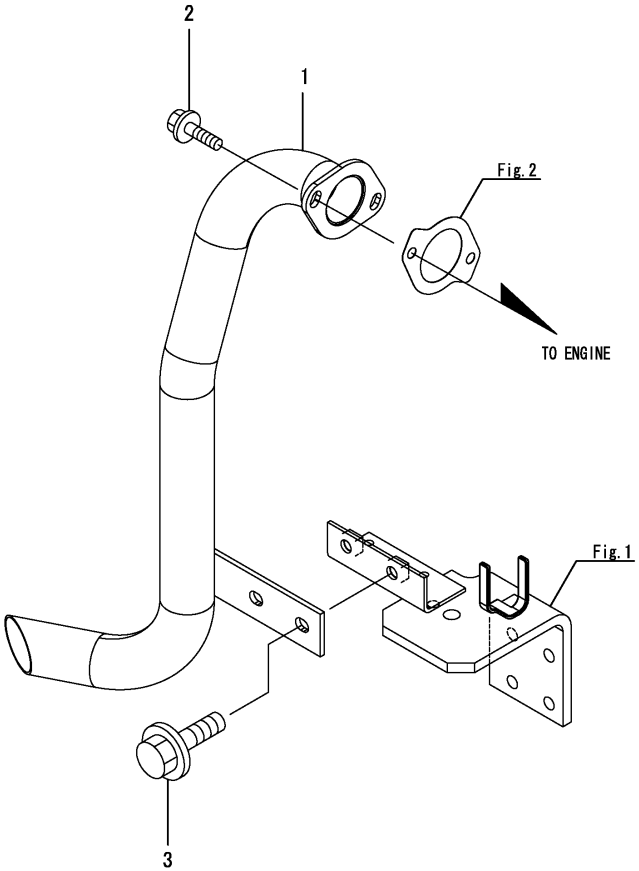

N:Old ◄Yes/No► New, Q:Old ◄No/Yes► New, R:Old ◄Yes/Yes► New, S:Old ◄No/No► New, W:Add, Z:Discontinued, F:Interchangeable by set, K:Q'ty Change

Copyright (C) 2014 YANMAR CO., LTD. All RightsReserved.

Fig.222. EXHAUST PORT(A,K,KW,KWA)

(A)=EG326Y
(B)=EG328Y
(C)=EG330Y
(D)=EG334Y
(E)=
(F)=

No.	Lev.	Parts No.	Description	Q'ty (A)	(B)	(C)	(D)	(E)	(F)	I	R
1	1	1A7160-03110	PIPE, EXHAUST			1	1				
2	1	26106-080252	BOLT, M8X 25 PLATED			2	2				
3	1	26106-100162	BOLT, M10X 16 PLATED			1	1				

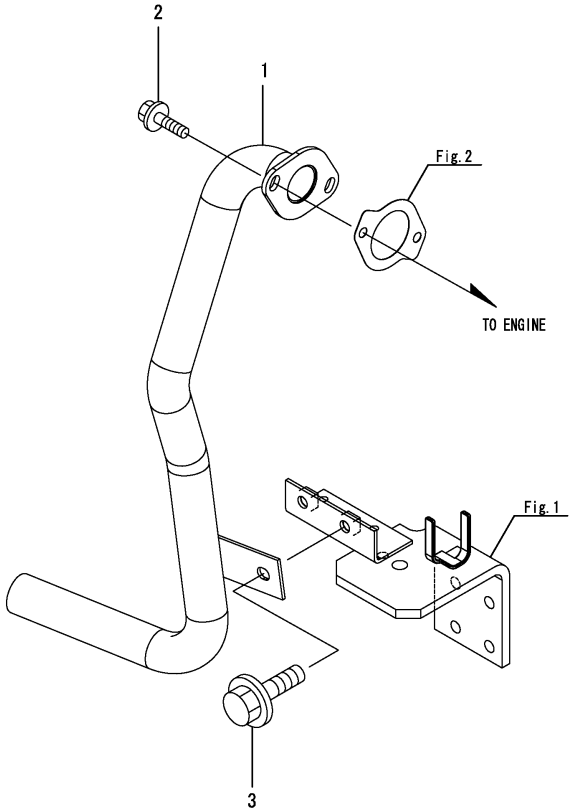

Remarks
* Applied to the following models.
EG330A, EG330K, EG330KW, EG334A, EG334KW, EG334KWA

N:Old $\overset{\text{Yes}}{\underset{\text{No}}{\leftrightarrow}}$ New, Q:Old $\overset{\text{No}}{\underset{\text{Yes}}{\leftrightarrow}}$ New, R:Old $\overset{\text{Yes}}{\underset{\text{Yes}}{\leftrightarrow}}$ New, S:Old $\overset{\text{No}}{\underset{\text{No}}{\leftrightarrow}}$ New, W:Add, Z:Discontinued, F:Interchangeable by set, K:Q'ty Change

Copyright (C) 2014 YANMAR CO., LTD. All RightsReserved.

Fig.223. EXHAUST PORT(A)(CABIN)

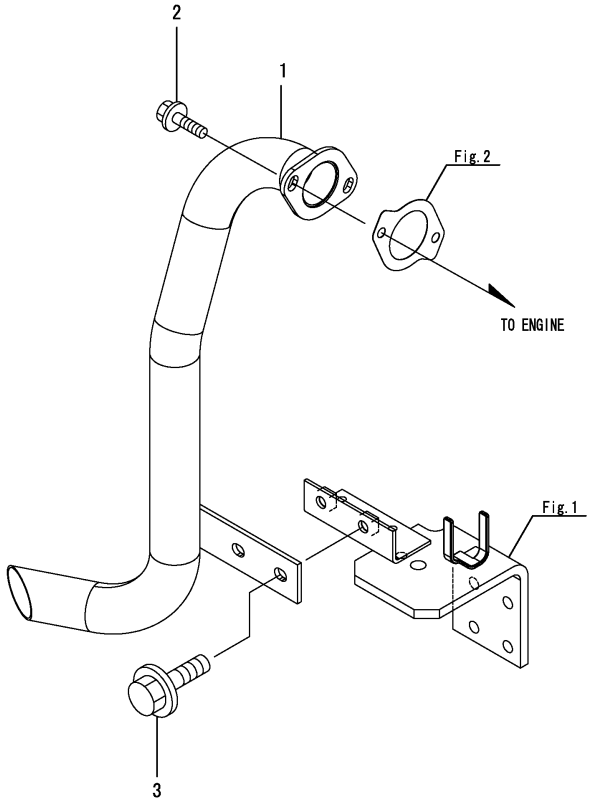

(A)=EG326Y (D)=EG334Y
(B)=EG328Y (E)=
(C)=EG330Y (F)=

No.	Lev.	Parts No.	Description	Q'ty (A)	(B)	(C)	(D)	(E)	(F)	I	R
1	1	1A7180-03110	PIPE, EXHAUST			1	1				
1-1	1	1A7180-03111	PIPE, EXHAUST (C=F070532) (D=F060499)			1	1			N	
1-2	1	1A7140-03111	PIPE, EXHAUST (C=F071704) (D=F061533)			1	1			N	
2	1	26106-080252	BOLT, M8X 25 PLATED			2	2				
3	1	26106-100162	BOLT, M10X 16 PLATED			2	2				

Remarks
* Applied to the following models.
EG330A, EG334A

N:Old $\xleftarrow[\text{No}]{\text{Yes}}$ New, Q:Old $\xleftarrow[\text{Yes}]{\text{No}}$ New, R:Old $\xleftrightarrow[\text{Yes}]{\text{Yes}}$ New, S:Old $\xleftrightarrow[\text{No}]{\text{No}}$ New, W:Add, Z:Discontinued, F:Interchangeable by set, K:Q'ty Change

Copyright (C) 2014 YANMAR CO., LTD. All RightsReserved.

Fig.8. FUEL TANK

(A)=EG326Y (D)=EG334Y
(B)=EG328Y (E)=
(C)=EG330Y (F)=

No.	Lev.	Parts No.	Description	Q'ty (A)	(B)	(C)	(D)	(E)	(F)	I	R
1	1	1A7140-04010	TANK M ASSY, FUEL	1	1	1	1				
2	2	1A7140-04090	CAP, FUEL TANK	1	1	1	1				
2-1	2	1A7140-04091	CAP, FUEL TANK	1	1	1	1			N	
	(A=F090750)	(B=F080614)	(C=F071784) (D=F061615)								
3	2	198072-04510	FILTER	1	1	1	1				
4	2	198240-04550	SCREW, M5X12	5	5	5	5				
5	2	1A7180-56600	GAUGE ASSY, FUEL	1	1	1	1				
6	2	194420-56620	GASKET	1	1	1	1				
7	2	22190-050000	WASHER, SEAL 5	5	5	5	5				
8	2	22190-080000	WASHER, SEAL 8	1	1	1	1				
9	2	26106-080162	BOLT, M8X 16 PLATED	1	1	1	1				

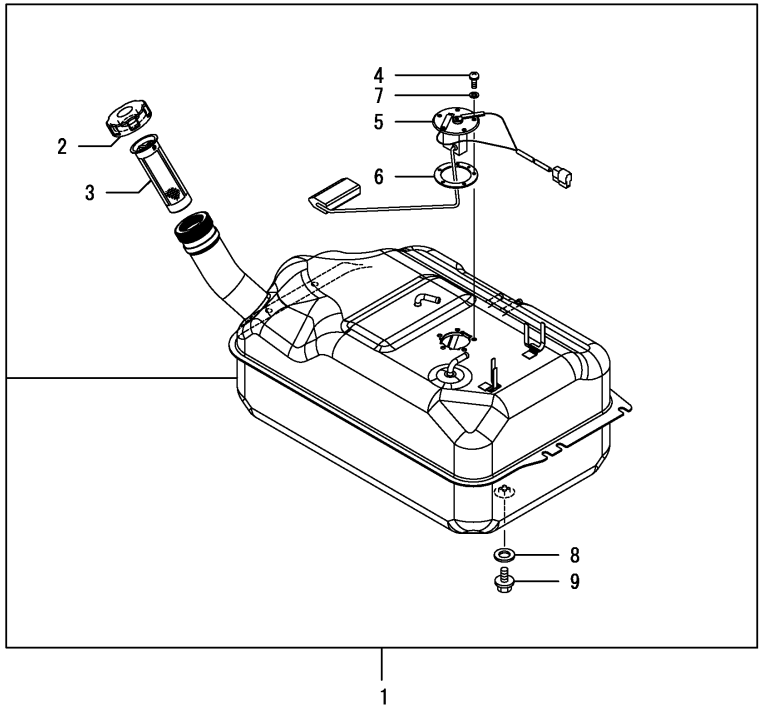

N:Old $\xleftarrow[\text{No}]{\text{Yes}}$ New, Q:Old $\xleftarrow[\text{Yes}]{\text{No}}$ New, R:Old $\xleftarrow[\text{Yes}]{\text{Yes}}$ New, S:Old $\xleftarrow[\text{No}]{\text{No}}$ New, W:Add, Z:Discontinued, F:Interchangeable by set, K:Q'ty Change

Copyright (C) 2014 YANMAR CO., LTD. All RightsReserved.

Fig.9. TANK BRACKET

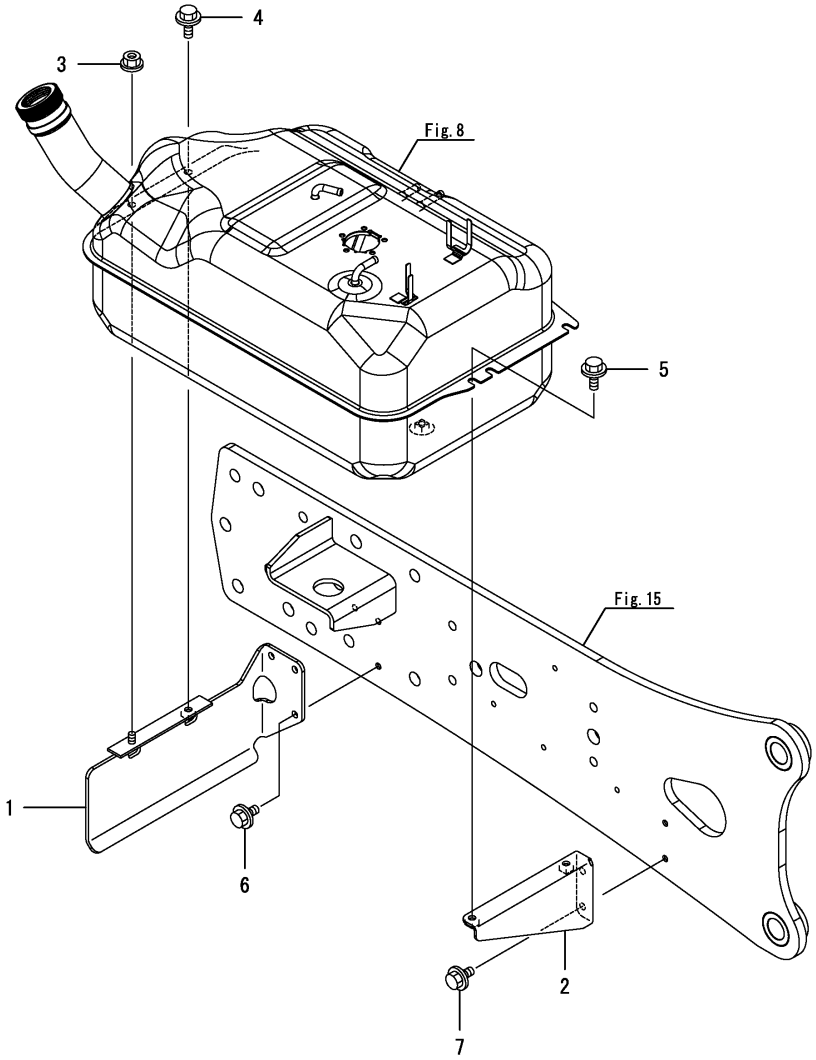

(A)=EG326Y (D)=EG334Y
(B)=EG328Y (E)=
(C)=EG330Y (F)=

No.	Lev.	Parts No.	Description	Q'ty (A)	(B)	(C)	(D)	(E)	(F)	I	R
1	1	1A7140-04200	BRACKET ASSY, TANK	1	1	1	1				
2	1	1A7140-04300	BRACKET ASSY, TANK	1	1	1	1				
3	1	194990-22140	NUT, M8	1	1	1	1				
4	1	26106-080162	BOLT, M8X 16 PLATED	1	1	1	1				
5	1	26106-080162	BOLT, M8X 16 PLATED	2	2	2	2				
6	1	26106-080202	BOLT, M8X 20 PLATED	3	3	3	3				
7	1	26106-080202	BOLT, M8X 20 PLATED	2	2	2	2				

N:Old $\xleftrightarrow[\text{No}]{\text{Yes}}$ New, Q:Old $\xleftrightarrow[\text{Yes}]{\text{No}}$ New, R:Old $\xleftrightarrow[\text{Yes}]{\text{Yes}}$ New, S:Old $\xleftrightarrow[\text{No}]{\text{No}}$ New, W:Add, Z:Discontinued, F:Interchangeable by set, K:Q'ty Change

Copyright (C) 2014 YANMAR CO., LTD. All RightsReserved.

Fig.10. FUEL PIPE

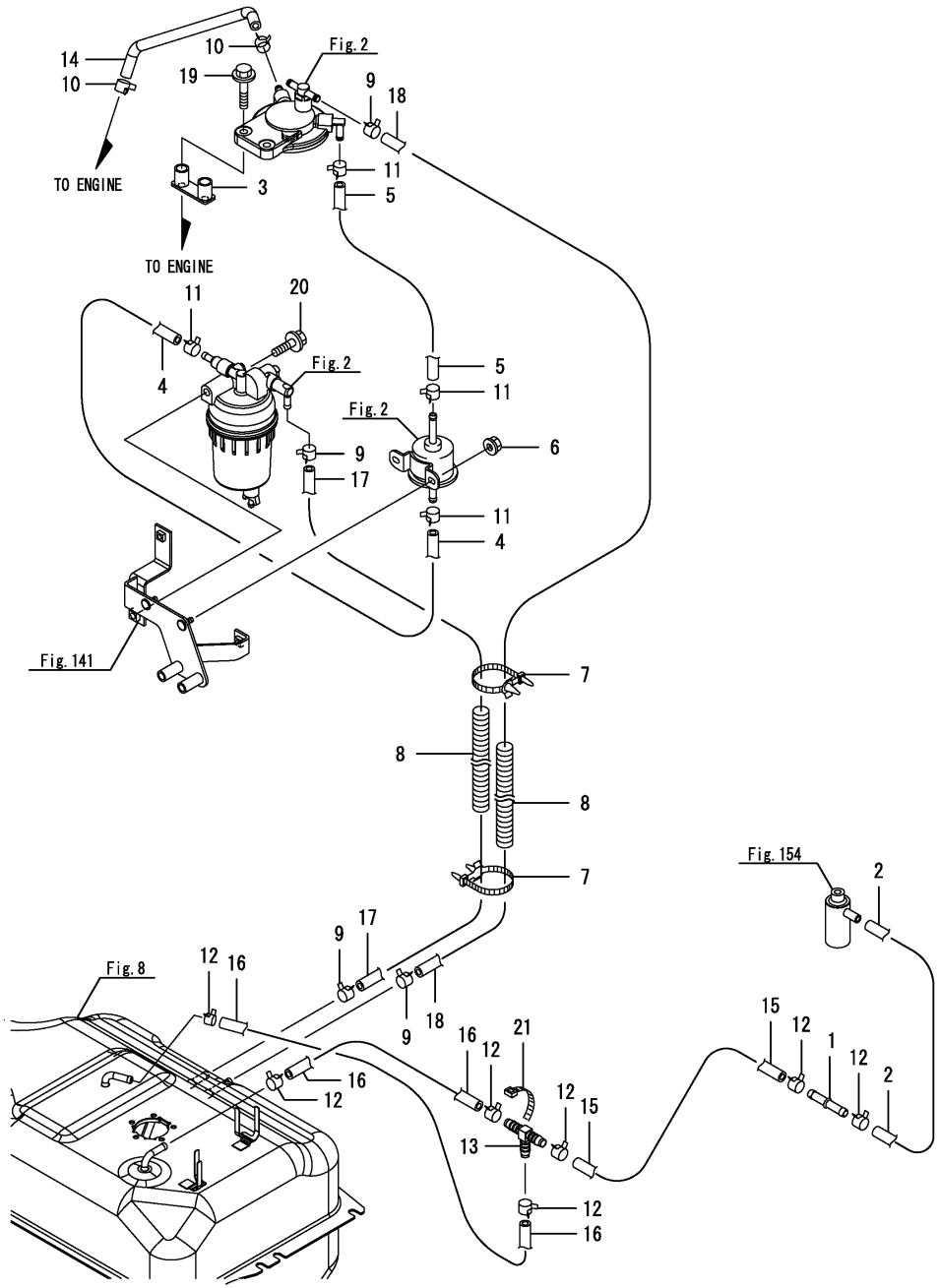

(A)=EG326Y (D)=EG334Y
(B)=EG328Y (E)=
(C)=EG330Y (F)=

No.	Lev.	Parts No.	Description	Q'ty (A)	(B)	(C)	(D)	(E)	(F)	I	R
1	1	198448-04250	JOINT	1	1	1	1				
1-1	1	198280-04470	JOINT, HOSE	1	1	1	1			N	
	(A=F090103)	(B=F080104)	(C=F070104) (D=F060104)								
1-2	1	1A7180-04850	JOINT, FO HOSE	1	1	1	1			R	
	(A=F090667)	(B=F080544)	(C=F071530) (D=F061398)								
2	1	1A7880-04270	HOSE, AIR VENT	1	1	1	1				
3	1	1A7140-04700	BRACKET ASSY, FILTER	1	1	1	1				
4	1	1A7180-04960	HOSE, BLADE	1	1	1	1				
5	1	1A7180-04970	HOSE, BLADE	1	1	1	1				
6	1	194990-22130	NUT, M6	2	2	2	2				
7	1	194680-51670	BAND, CLIP	2	2	2	2				
8	1	1A7610-52170	TUBE, 15X400	2	2	2	2				
9	1	114270-59010	CLIP, HOSE 12	4	4	4	4				
10	1	114270-59010	CLIP, HOSE 12	2	2	2	2				
11	1	114270-59010	CLIP, HOSE 12	4	4	4	4				
12	1	114270-59010	CLIP, HOSE 12	7	7	7	7				
13	1	119629-59910	JOINT, 3-WAY	1	1	1	1				
14	1	23980-730310	HOSE, 7.3X 310	1	1	1	1				
15	1	23980-730330	HOSE, 7.3X 330	1	1	1	1				
16	1	23980-730660	HOSE, 7.3X 660	2	2	2	2				
16-1	1	23980-730680	HOSE, 7.3X 680	2	2	2	2			N	
	(A=F090101)	(B=F080101)	(C=F070101) (D=F060101)								
17	1	23980-730870	HOSE, 7.3X 870	1	1	1	1				
17-1	1	23980-730890	HOSE, 7.3X 890	1	1	1	1			N	
	(A=F090101)	(B=F080101)	(C=F070101) (D=F060101)								
18	1	23980-731080	HOSE, 7.3X1080	1	1	1	1				
19	1	26106-080552	BOLT, M8X 55 PLATED	2	2	2	2				
20	1	26106-080702	BOLT, M8X 70 PLATED	1	1	1	1				
21	1	29622-250001	BAND, RF250	1	1	1	1				

N:Old $\xleftarrow[\text{No}]{\text{Yes}}$ New, Q:Old $\xleftarrow[\text{Yes}]{\text{No}}$ New, R:Old $\xleftarrow[\text{Yes}]{\text{Yes}}$ New, S:Old $\xleftarrow[\text{No}]{\text{No}}$ New, W:Add, Z:Discontinued, F:Interchangeable by set, K:Q'ty Change

Copyright (C) 2014 YANMAR CO., LTD. All RightsReserved.

Fig.11. FUEL PIPE(CABIN)

(A)=EG326Y (D)=EG334Y
(B)=EG328Y (E)=
(C)=EG330Y (F)=

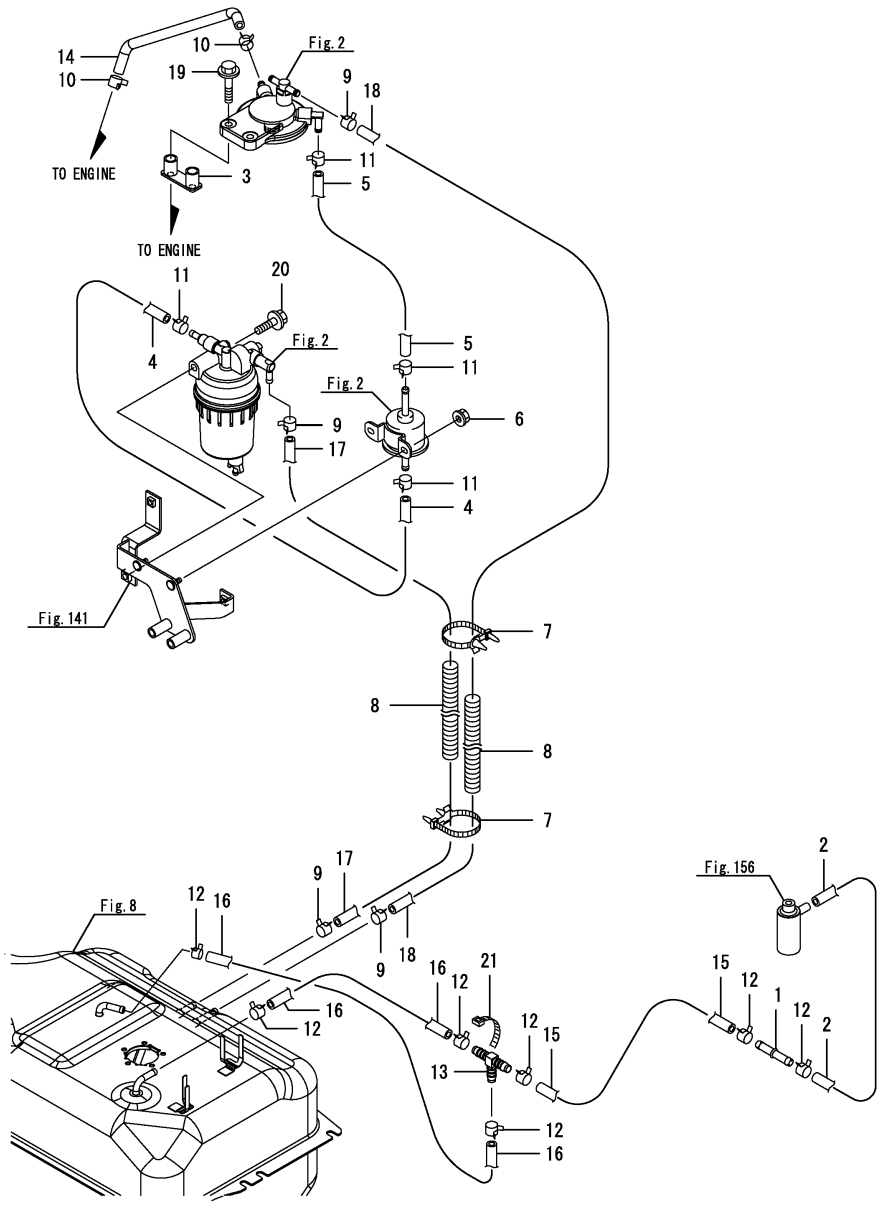

No.	Lev.	Parts No.	Description	Q'ty (A)	(B)	(C)	(D)	(E)	(F)	I	R
1	1	198448-04250	JOINT	1	1	1	1				
1-1	1	198280-04470	JOINT, HOSE	1	1	1	1			N	
	(A=F090103)	(B=F080104)	(C=F070104)	(D=F060104)							
1-2	1	1A7180-04850	JOINT, FO HOSE	1	1	1	1			R	
	(A=F090667)	(B=F080544)	(C=F071530)	(D=F061398)							
2	1	1A7880-04270	HOSE, AIR VENT	1	1	1	1				
3	1	1A7140-04700	BRACKET ASSY, FILTER	1	1	1	1				
4	1	1A7180-04960	HOSE, BLADE	1	1	1	1				
5	1	1A7180-04970	HOSE, BLADE	1	1	1	1				
6	1	194990-22130	NUT, M6	2	2	2	2				
7	1	194680-51670	BAND, CLIP	2	2	2	2				
8	1	1A7610-52170	TUBE, 15X400	2	2	2	2				
9	1	114270-59010	CLIP, HOSE 12	4	4	4	4				
10	1	114270-59010	CLIP, HOSE 12	2	2	2	2				
11	1	114270-59010	CLIP, HOSE 12	4	4	4	4				
12	1	114270-59010	CLIP, HOSE 12	7	7	7	7				
13	1	119629-59910	JOINT, 3-WAY	1	1	1	1				
14	1	23980-730310	HOSE, 7.3X 310	1	1	1	1				
15	1	23980-730440	HOSE, 7.3X 440	1	1	1	1				
15-1	1	23980-730450	HOSE, 7.3X 450	1	1	1	1			N	
	(A=F090101)	(B=F080101)	(C=F070101)	(D=F060101)							
16	1	23980-730660	HOSE, 7.3X 660	2	2	2	2				
16-1	1	23980-730680	HOSE, 7.3X 680	2	2	2	2			N	
	(A=F090101)	(B=F080101)	(C=F070101)	(D=F060101)							
17	1	23980-730870	HOSE, 7.3X 870	1	1	1	1				
17-1	1	23980-730890	HOSE, 7.3X 890	1	1	1	1			N	
	(A=F090101)	(B=F080101)	(C=F070101)	(D=F060101)							
18	1	23980-731080	HOSE, 7.3X1080	1	1	1	1				
19	1	26106-080552	BOLT, M8X 55 PLATED	2	2	2	2				
20	1	26106-080702	BOLT, M8X 70 PLATED	1	1	1	1				
21	1	29622-250001	BAND, RF250	1	1	1	1				

Remarks
* Applied to the following models.
EG326, EG328, EG330, EG330A, EG334, EG334A

N:Old ←Yes/No→ New, Q:Old ←No/Yes→ New, R:Old ←Yes/Yes→ New, S:Old ←No/No→ New, W:Add, Z:Discontinued, F:Interchangeable by set, K:Q'ty Change

Copyright (C) 2014 YANMAR CO., LTD. All RightsReserved.

Fig.224. FUEL PIPE(A,K,KW,KWA)

(A)=EG326Y
(B)=EG328Y
(C)=EG330Y
(D)=EG334Y
(E)=
(F)=

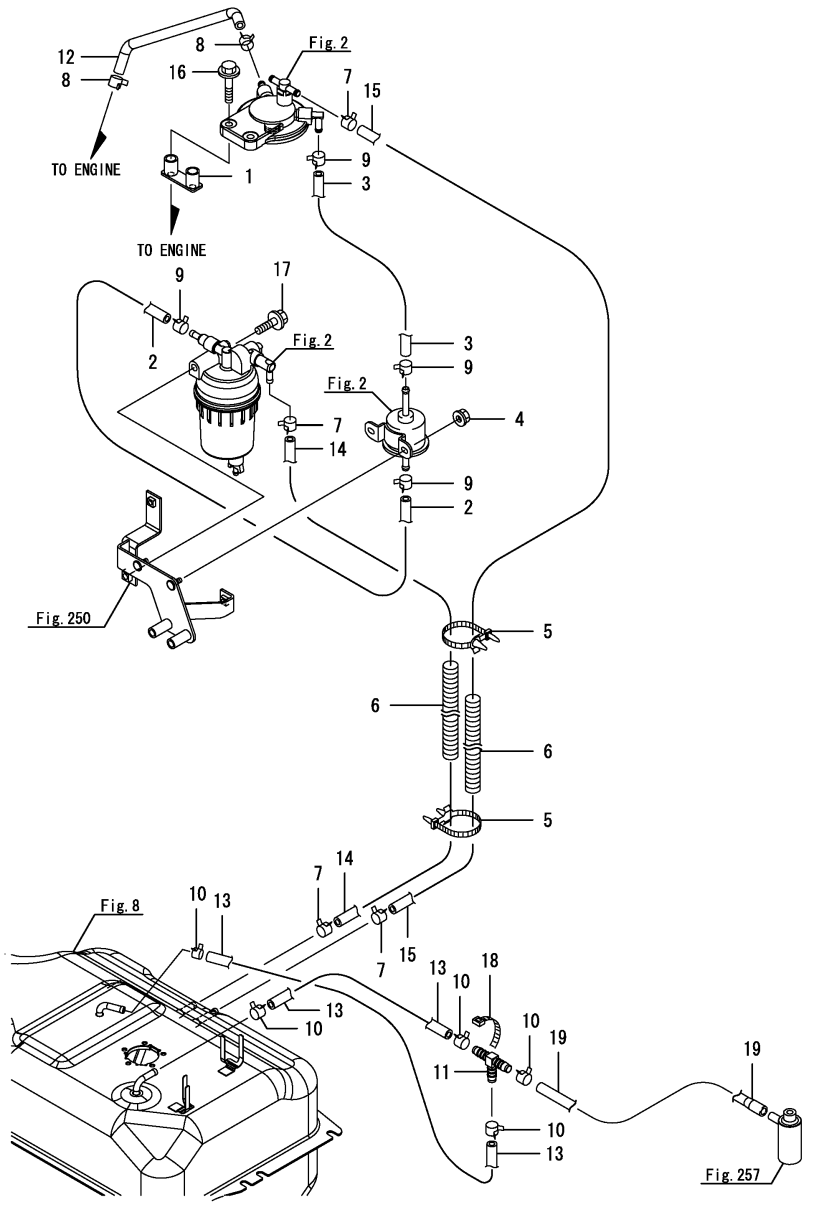

No.	Lev.	Parts No.	Description	Q'ty (A)	(B)	(C)	(D)	(E)	(F)	I	R
1	1	1A7140-04700	BRACKET ASSY, FILTER			1	1				
2	1	1A7180-04960	HOSE, BLADE			1	1				
3	1	1A7180-04970	HOSE, BLADE			1	1				
4	1	194990-22130	NUT, M6			2	2				
5	1	194680-51670	BAND, CLIP			2	2				
6	1	1A7610-52170	TUBE, 15X400			2	2				
7	1	114270-59010	CLIP, HOSE 12			4	4				
8	1	114270-59010	CLIP, HOSE 12			2	2				
9	1	114270-59010	CLIP, HOSE 12			4	4				
10	1	114270-59010	CLIP, HOSE 12			5	5				
11	1	119629-59910	JOINT, 3-WAY			1	1				
12	1	23980-730310	HOSE, 7.3X 310			1	1				
13	1	23980-730680	HOSE, 7.3X 680			2	2				
14	1	23980-730890	HOSE, 7.3X 890			1	1				
15	1	23980-731080	HOSE, 7.3X1080			1	1				
16	1	26106-080552	BOLT, M8X 55 PLATED			2	2				
17	1	26106-080702	BOLT, M8X 70 PLATED			1	1				
18	1	29622-250001	BAND, RF250			1	1				
19	1	1A7160-04810	HOSE, BREATHER			1	1				

Remarks
* Applied to the following models.
EG330A, EG330K, EG330KW, EG334A, EG334KW, EG334KWA

N:Old $\frac{\text{Yes}}{\text{No}}$ New, Q:Old $\frac{\text{No}}{\text{Yes}}$ New, R:Old $\frac{\text{Yes}}{\text{Yes}}$ New, S:Old $\frac{\text{No}}{\text{No}}$ New, W:Add, Z:Discontinued, F:Interchangeable by set, K:Q'ty Change

Copyright (C) 2014 YANMAR CO., LTD. All RightsReserved.

Fig.12. SHUTTER PLATE

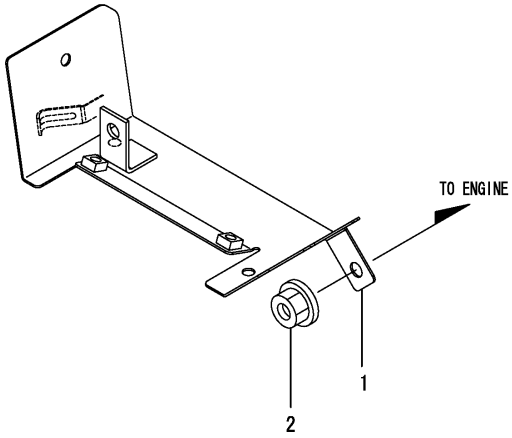

(A)=EG326Y (D)=EG334Y
(B)=EG328Y (E)=
(C)=EG330Y (F)=

No.	Lev.	Parts No.	Description	Q'ty (A)	(B)	(C)	(D)	(E)	(F)	I	R
1	1	1A7140-05510	PLATE, SHUTTER	1	1	1	1				
2	1	194990-22140	NUT, M8	2	2	2	2				

N:Old $\xleftrightarrow[\text{No}]{\text{Yes}}$ New, Q:Old $\xleftrightarrow[\text{Yes}]{\text{No}}$ New, R:Old $\xleftrightarrow[\text{Yes}]{\text{Yes}}$ New, S:Old $\xleftrightarrow[\text{No}]{\text{No}}$ New, W:Add, Z:Discontinued, F:Interchangeable by set, K:Q'ty Change

Copyright (C) 2014 YANMAR CO., LTD. All RightsReserved.

Fig.13. CHASSIS FRAME(FRONT)

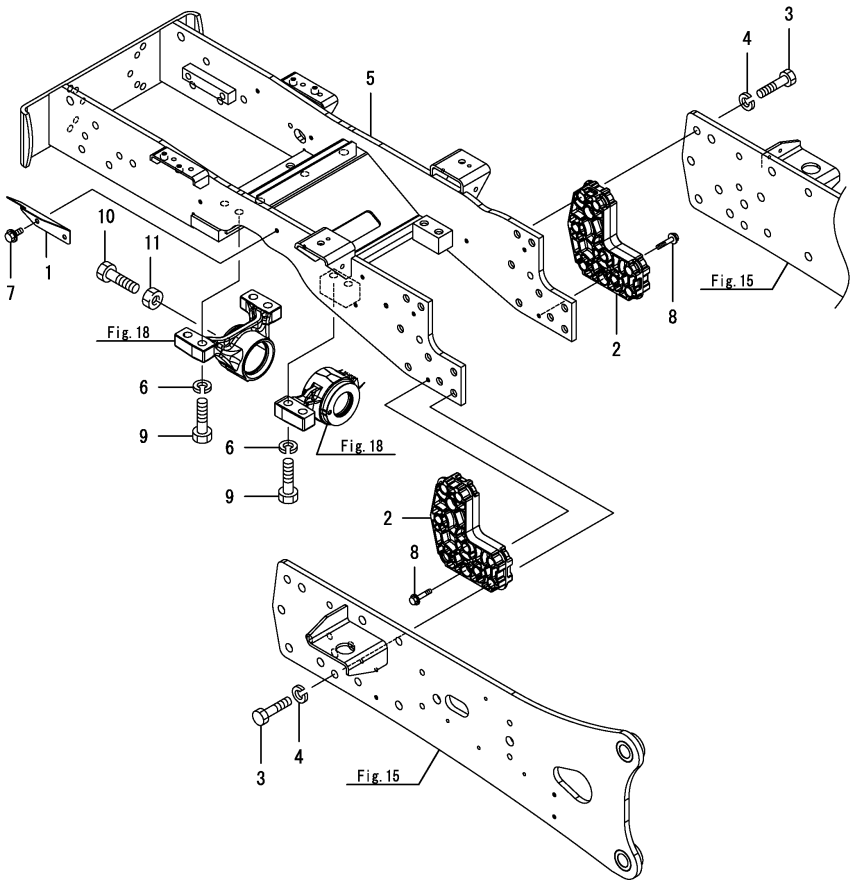

(A)=EG326Y (D)=EG334Y
(B)=EG328Y (E)=
(C)=EG330Y (F)=

No.	Lev.	Parts No.	Description	Q'ty (A)	(B)	(C)	(D)	(E)	(F)	I	R
1	1	1A7180-05600	PLATE, SHUTTER L	1	1	1	1				
1-1	1	1A7180-05601	PLATE, L SHUTTER	1	1	1	1			N	
	(A=F090103)	(B=F080104)	(C=F070104) (D=F060104)								
2	1	1A7180-10830	SPACER	2	2	2	2				
3	1	1A7180-10860	BOLT, M16X70	14	14	14	14				
4	1	1A7180-10870	WASHER, SPRING 16	14	14	14	14				
5	1	1A7140-11100	BRACKET ASSY, AXLE	1	1	1	1				
5-1	1	1A7140-11101	BRACKET ASSY, AXLE	1	1	1	1			N	
	(A=F090556)	(B=F080470)	(C=F071221) (D=F061132)								
6	1	22217-160000	WASHER, SPRING 16	8	8	8	8				
7	1	26106-080162	BOLT, M8X 16 PLATED	2	2	2	2				
8	1	26106-080402	BOLT, M8X 40 PLATED	4	4	4	4				
9	1	26116-160602	BOLT, M16X 60 PLATED	8	8	8	8				
10	1	26116-160604	BOLT, M16X 60 PLATED	1	1	1	1				
11	1	26716-160002	NUT, M16	1	1	1	1				

Remarks
* Applied to the following models.
EG326, EG328, EG330, EG334
EG330A (Cabin specification), EG334A (Cabin specification)

N:Old $\xleftarrow[\text{No}]{\text{Yes}}$ New, Q:Old $\xleftarrow[\text{Yes}]{\text{No}}$ New, R:Old $\xleftarrow[\text{Yes}]{\text{Yes}}$ New, S:Old $\xleftarrow[\text{No}]{\text{No}}$ New, W:Add, Z:Discontinued, F:Interchangeable by set, K:Q'ty Change

Copyright (C) 2014 YANMAR CO., LTD. All RightsReserved.

Fig.225. CHASSIS FRAME(FRONT)(A,K,KW,KWA)

(A)=EG326Y
(B)=EG328Y
(C)=EG330Y
(D)=EG334Y
(E)=
(F)=

No.	Lev.	Parts No.	Description	Q'ty (A)	(B)	(C)	(D)	(E)	(F)	I	R
1	1	1A7180-10830	SPACER			2	2				
3	1	1A7180-10860	BOLT, M16X70			14	14				
4	1	1A7180-10870	WASHER, SPRING 16			14	14				
5	1	1A7160-11100	BRACKET ASSY, AXLE			1	1				
5-1	1	1A7160-11101	BRACKET ASSY, AXLE (C=F071221) (D=F061132)			1	1			N	
7	1	22217-160000	WASHER, SPRING 16			8	8				
8	1	26106-080402	BOLT, M8X 40 PLATED			4	4				
9	1	26116-160602	BOLT, M16X 60 PLATED			8	8				
10	1	26116-160604	BOLT, M16X 60 PLATED			1	1				
11	1	26716-160002	NUT, M16			1	1				

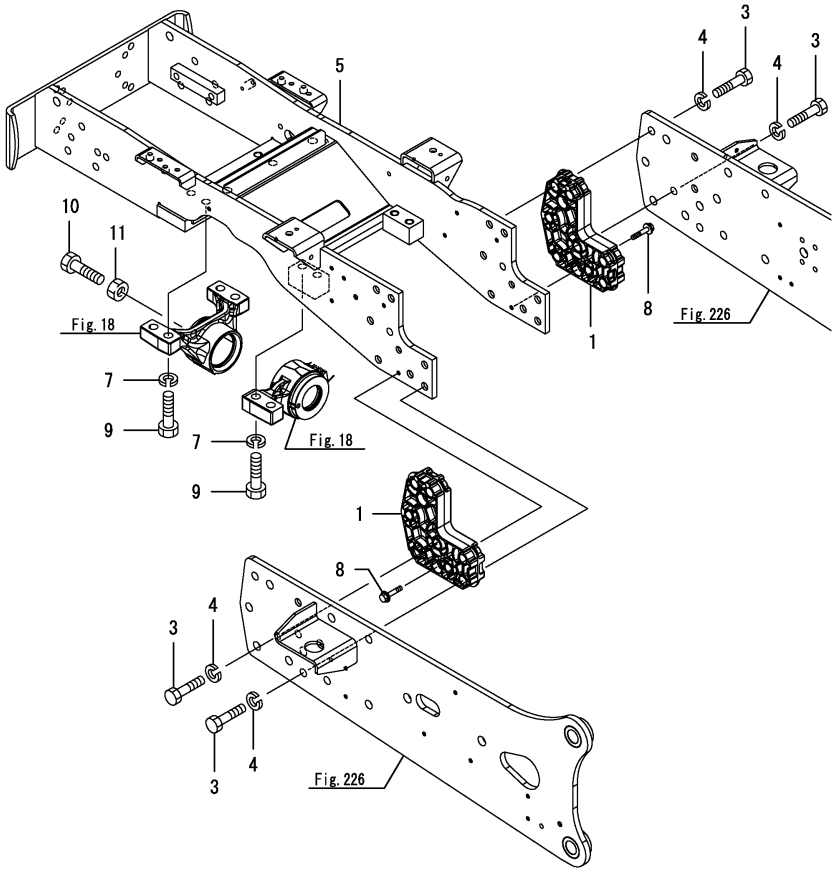

Remarks
* Applied to the following models.
EG330A(Rops specification), EG330K, EG330KW, EG334A(Rops specification), EG334KW, EG334KWA

N:Old ◄Yes/No► New, Q:Old ◄No/Yes► New, R:Old ◄Yes/Yes► New, S:Old ◄No/No► New, W:Add, Z:Discontinued, F:Interchangeable by set, K:Q'ty Change

Copyright (C) 2014 YANMAR CO., LTD. All RightsReserved.

Fig.14. RADIATOR SUPPORT

(A)=EG326Y (D)=EG334Y
(B)=EG328Y (E)=
(C)=EG330Y (F)=

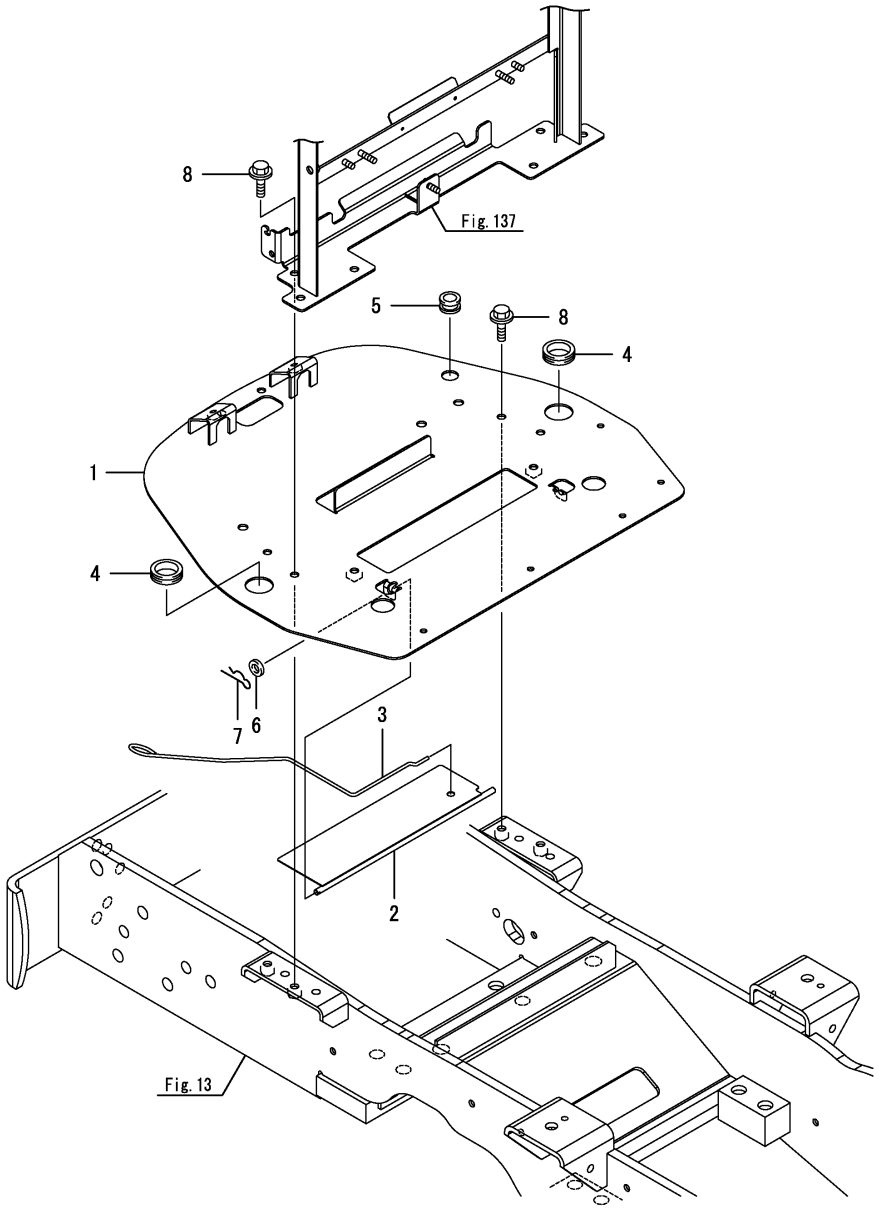

No.	Lev.	Parts No.	Description	Q'ty (A)	(B)	(C)	(D)	(E)	(F)	I	R
1	1	1A7180-01601	BRACKET ASSY	1	1	1	1				
1-1	1	1A7180-01602	BRACKET ASSY, RAD.	1	1	1	1			N	
	(A=F090204)	(B=F080194)	(C=F070272) (D=F060261)								
2	1	1A7180-01700	PLATE, SHUTTER FRONT	1	1	1	1				
3	1	1A7180-01750	ARM, SHUTTER	1	1	1	1				
4	1	194155-05250	GROMMET, 25	2	2	2	2				
5	1	198200-61490	GROMMET, 8	1	1	1	1				
6	1	22137-060000	WASHER, 6	1	1	1	1				
7	1	22372-060000	PIN, SNAP 6	1	1	1	1				
8	1	26106-080162	BOLT, M8X 16 PLATED	4	4	4	4				

N:Old $\xleftarrow[\text{No}]{\text{Yes}}$ New, Q:Old $\xleftarrow[\text{Yes}]{\text{No}}$ New, R:Old $\xleftarrow[\text{Yes}]{\text{Yes}}$ New, S:Old $\xleftarrow[\text{No}]{\text{No}}$ New, W:Add, Z:Discontinued, F:Interchangeable by set, K:Q'ty Change

Copyright (C) 2014 YANMAR CO., LTD. All RightsReserved.

Fig.15. CHASSIS FRAME(REAR)

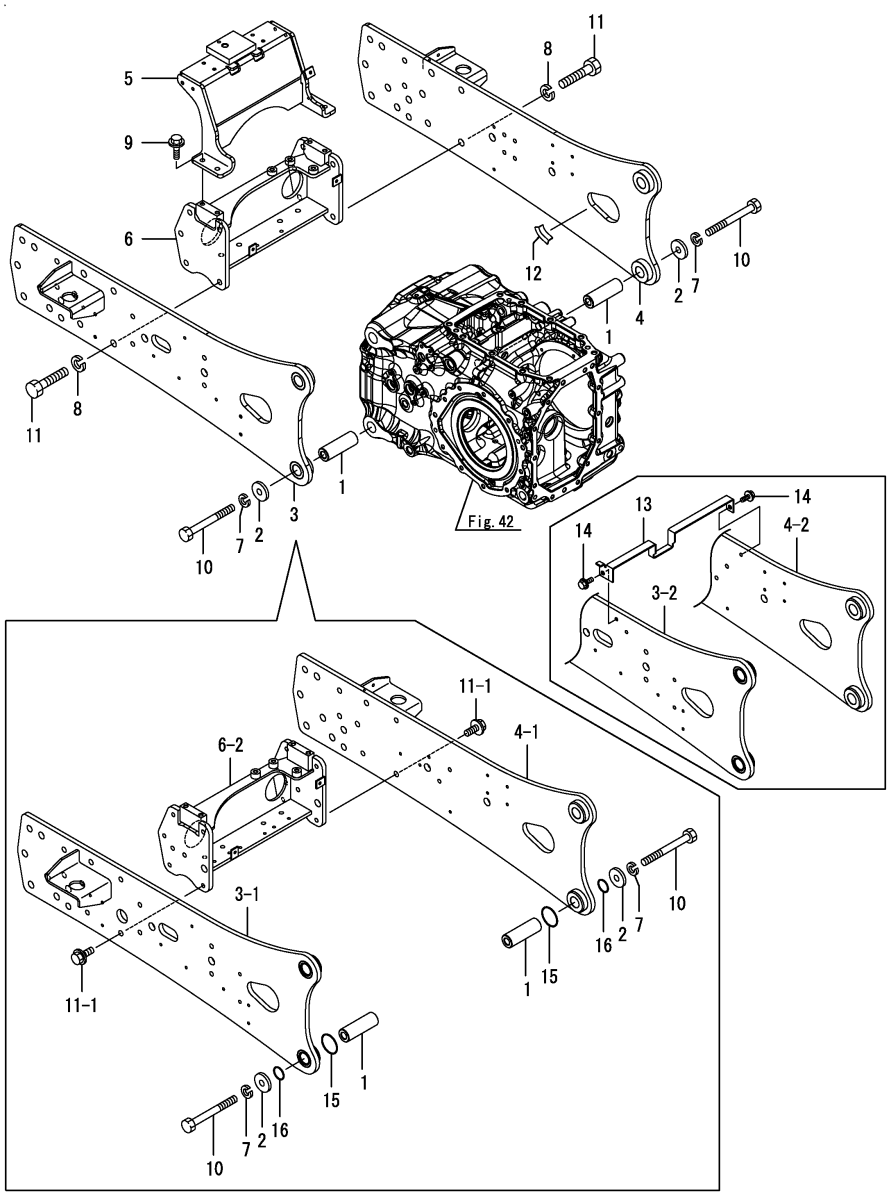

(A)=EG326Y (D)=EG334Y
(B)=EG328Y (E)=
(C)=EG330Y (F)=

No.	Lev.	Parts No.	Description	Q'ty (A)	(B)	(C)	(D)	(E)	(F)	I	R
1	1	1A7180-10410	COLLAR	4	4	4	4				
2	1	1A7180-10460	COLLAR, 40X13X6	4	4	4	4				
3	1	1A7180-10702	FRAME ASSY, CHASSIS	1	1	1	1				
3-1	1	1A7185-10700	FRAME ASSY, REAR L	1	1	1	1			S	
	(A=F090556)	(B=F080470)	(C=F071221) (D=F061132)								
3-2	1	1A7185-10701	FRAME ASSY, REAR L	1	1	1	1			N	
	(A=F100083)	(B=F200066)	(C=F300240) (D=F400238)								
4	1	1A7180-10802	FRAME ASSY, CHASSIS	1	1	1	1				
4-1	1	1A7185-10800	FRAME ASSY, REAR R	1	1	1	1			S	
	(A=F090556)	(B=F080470)	(C=F071221) (D=F061132)								
4-2	1	1A7185-10801	FRAME ASSY, REAR R	1	1	1	1			N	
	(A=F100083)	(B=F200066)	(C=F300240) (D=F400238)								
5	1	1A7140-11430	FRAME ASSY, BRIDGE	1	1	1	1				
6	1	1A7180-11802	FRAME ASSY, BRIDGE	1	1	1	1				
6-1	1	1A7180-11803	FRAME ASSY, BRIDGE			1	1			N	
			(C=F070272) (D=F060261)								
6-2	1	1A7185-11800	FRAME ASSY, BRIDGE	1	1	1	1			S	
	(A=F090556)	(B=F080470)	(C=F071221) (D=F061132)								
7	1	22217-120000	WASHER, SPRING 12	4	4	4	4				
8	1	22217-160000	WASHER, SPRING 16	10	10	10	10			Z	
	(A=F090556)	(B=F080470)	(C=F071221) (D=F061132)								
9	1	26106-100252	BOLT, M10X 25 PLATED	4	4	4	4				
10	1	26116-121102	BOLT, M12X110 PLATED	4	4	4	4				
11	1	26116-160402	BOLT, M16X 40 PLATED	10	10	10	10				
11-1	1	26106-120252	BOLT, M12X 25 PLATED	10	10	10	10			S	
	(A=F090556)	(B=F080470)	(C=F071221) (D=F061132)								
12	1	198093-84810	SEAL, FENDER	1	1	1	1			W	
	(A=F090186)	(B=F080179)	(C=F070345) (D=F060356)								
13	1	1A7180-25870	PLATE, GUIDE	1	1	1	1			W	
	(A=F100083)	(B=F200066)	(C=F300240) (D=F400238)								
14	1	26106-080162	BOLT, M8X 16 PLATED	2	2	2	2			W	
	(A=F100083)	(B=F200066)	(C=F300240) (D=F400238)								
15	1	24311-000500	O-RING, 1AP50.0	4	4	4	4			W	
	(A=F090556)	(B=F080470)	(C=F071221) (D=F061132)								
16	1	24351-240280	O-RING, 1A24028	4	4	4	4			W	
	(A=F090556)	(B=F080470)	(C=F071221) (D=F061132)								

Remarks
* Applied to the following models.
EG326, EG328, EG330, EG334
EG330A (Cabin specification), EG334A (Cabin specification)

N:Old $\xleftrightarrow[\text{No}]{\text{Yes}}$ New, Q:Old $\xleftrightarrow[\text{Yes}]{\text{No}}$ New, R:Old $\xleftrightarrow[\text{Yes}]{\text{Yes}}$ New, S:Old $\xleftrightarrow[\text{No}]{\text{No}}$ New, W:Add, Z:Discontinued, F:Interchangeable by set, K:Q'ty Change

Copyright (C) 2014 YANMAR CO., LTD. All RightsReserved.

Fig.226. CHASSIS FRAME(REAR)(A,K,KW,KWA)

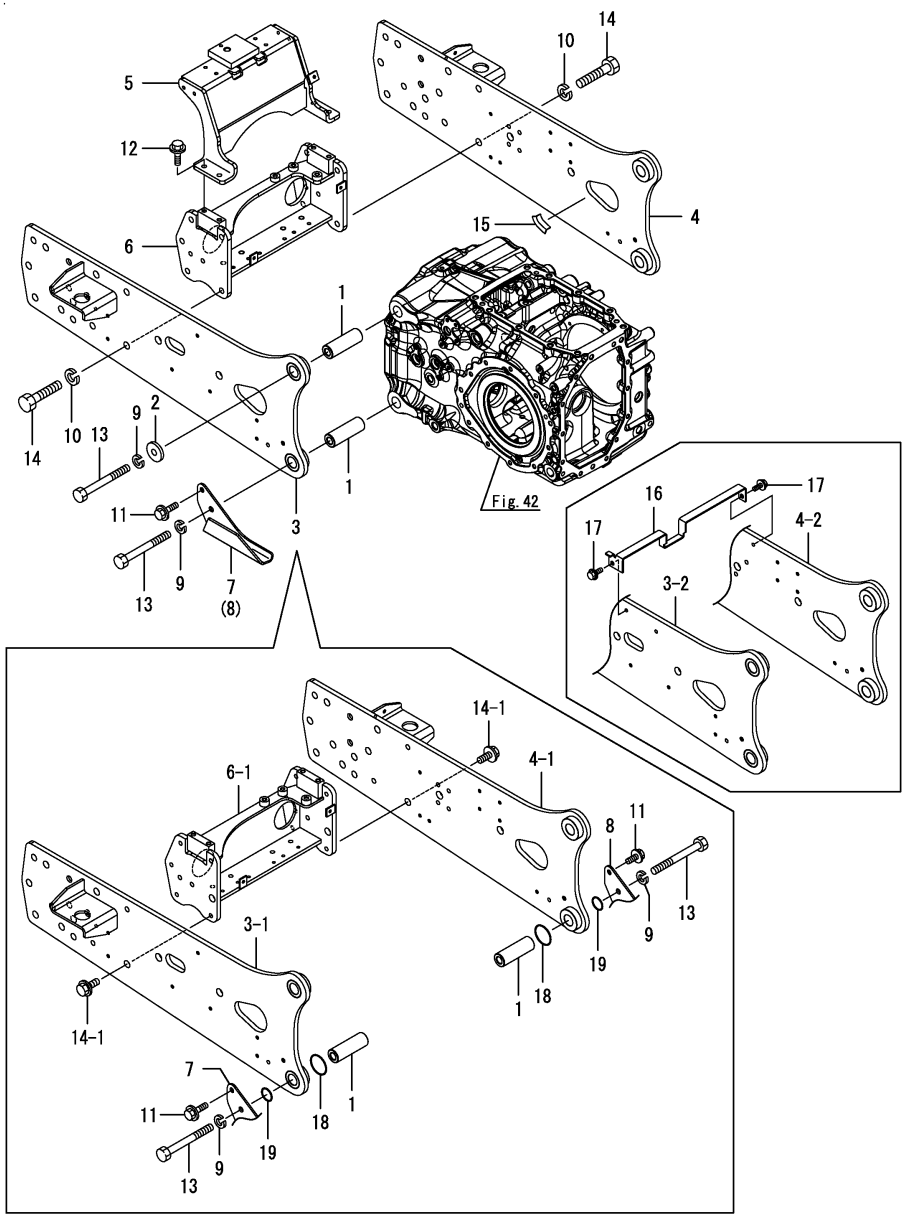

(A)=EG326Y (B)=EG328Y (C)=EG330Y (D)=EG334Y (E)= (F)=

No.	Lev.	Parts No.	Description	Q'ty (A)	(B)	(C)	(D)	(E)	(F)	I	R
1	1	1A7180-10410	COLLAR			4	4				
2	1	1A7180-10460	COLLAR, 40X13X6			2	2				
3	1	1A7160-10700	FRAME ASSY, REAR L			1	1				
3-1	1	1A7160-10701	FRAME ASSY, REAR L (C=F071221) (D=F061132)			1	1			S	
3-2	1	1A7160-10702	FRAME ASSY, REAR L (C=F300240) (D=F400238)			1	1			N	
4	1	1A7160-10800	FRAME ASSY, REAR R			1	1				
4-1	1	1A7160-10801	FRAME ASSY, REAR R (C=F071221) (D=F061132)			1	1			S	
4-2	1	1A7160-10802	FRAME ASSY, REAR R (C=F300240) (D=F400238)			1	1			N	
5	1	1A7140-11430	FRAME ASSY, BRIDGE			1	1				
6	1	1A7180-11803	FRAME ASSY, BRIDGE			1	1				
6-1	1	1A7185-11800	FRAME ASSY, BRIDGE (C=F071221) (D=F061132)			1	1			S	
7	1	1A7160-48830	GUARD, B L			1	1				
8	1	1A7160-48840	GUARD, B R			1	1				
9	1	22217-120000	WASHER, SPRING 12			4	4				
10	1	22217-160000	WASHER, SPRING 16 (C=F071221) (D=F061132)			10	10			Z	
11	1	26106-100202	BOLT, M10X 20 PLATED			2	2				
12	1	26106-100252	BOLT, M10X 25 PLATED			4	4				
13	1	26116-121102	BOLT, M12X110 PLATED			4	4				
14	1	26116-160402	BOLT, M16X 40 PLATED			10	10				
14-1	1	26106-120252	BOLT, M12X 25 PLATED (C=F071221) (D=F061132)			10	10			N	
15	1	198093-84810	SEAL, FENDER (C=F070345) (D=F060356)			1	1			W	
16	1	1A7180-25870	PLATE, GUIDE (C=F300240) (D=F400238)			1	1			W	
17	1	26106-080162	BOLT, M8X 16 PLATED (C=F300240) (D=F400238)			2	2			W	
18	1	24311-000500	O-RING, 1AP50.0 (C=F071221) (D=F061132)			4	4			W	
19	1	24351-240280	O-RING, 1A24028 (C=F071221) (D=F061132)			4	4			W	

Remarks
* Applied to the following models.
EG330A(Rops specification), EG330K, EG330KW, EG334A(Rops specification), EG334KW, EG334KWA

N:Old $\xleftrightarrow[\text{No}]{\text{Yes}}$ New, Q:Old $\xleftrightarrow[\text{Yes}]{\text{No}}$ New, R:Old $\xleftrightarrow[\text{Yes}]{\text{Yes}}$ New, S:Old $\xleftrightarrow[\text{No}]{\text{No}}$ New, W:Add, Z:Discontinued, F:Interchangeable by set, K:Q'ty Change

Copyright (C) 2014 YANMAR CO., LTD. All RightsReserved.

Fig.16. FRONT WEIGHT(30K)

(A)=EG326Y
(B)=EG328Y
(C)=EG330Y
(D)=EG334Y
(E)=
(F)=

No.	Lev.	Parts No.	Description	Q'ty (A)	(B)	(C)	(D)	(E)	(F)	I	R
1	1	1A7280-81110	WEIGHT, FRONT 30KG	1	1	1	1				
2	1	26106-120502	BOLT, M12X 50 PLATED	4	4	4	4				

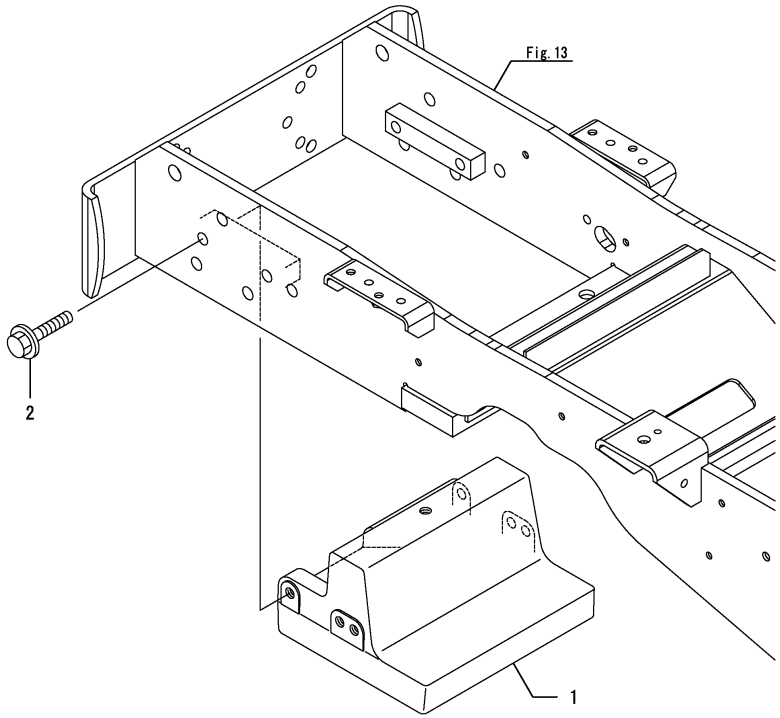

Remarks
* Applied to the following models.
EG330A, EG330K, EG330KW, EG334A, EG334KW, EG334KWA
(Rops specification) EG326, EG328
(Cabin specification) EG330, EG330L, EG330S, EG334, EG334L, EG334S

N:Old $\xleftrightarrow[\text{No}]{\text{Yes}}$ New, Q:Old $\xleftrightarrow[\text{Yes}]{\text{No}}$ New, R:Old $\xleftrightarrow[\text{Yes}]{\text{Yes}}$ New, S:Old $\xleftrightarrow[\text{No}]{\text{No}}$ New, W:Add, Z:Discontinued, F:Interchangeable by set, K:Q'ty Change

Copyright (C) 2014 YANMAR CO., LTD. All RightsReserved.

Fig.17. FRONT WEIGHT(50K)

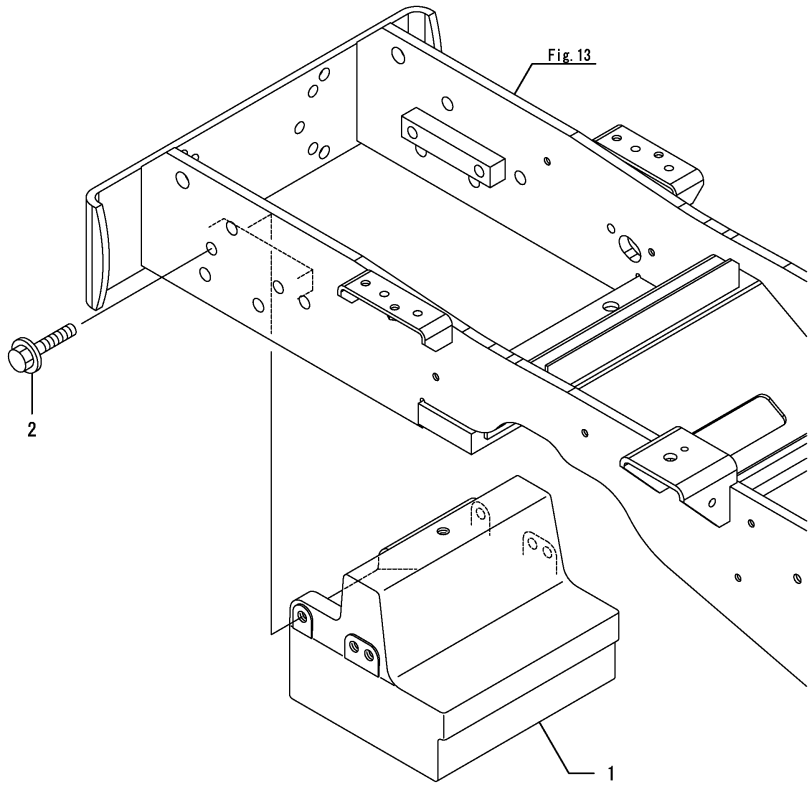

(A)=EG326Y (D)=EG334Y
(B)=EG328Y (E)=
(C)=EG330Y (F)=

No.	Lev.	Parts No.	Description	Q'ty (A)	(B)	(C)	(D)	(E)	(F)	I	R
1	1	1A7290-81110	WEIGHT, FRONT 50KG			1	1				
2	1	26106-120502	BOLT, M12X 50 PLATED			4	4				

Remarks
* Applied to the following models.
(Rops specification) EG330, EG330L, EG334S, EG334, EG334L, EG334S

N:Old $\xleftrightarrow[\text{No}]{\text{Yes}}$ New, Q:Old $\xleftrightarrow[\text{Yes}]{\text{No}}$ New, R:Old $\xleftrightarrow[\text{Yes}]{\text{Yes}}$ New, S:Old $\xleftrightarrow[\text{No}]{\text{No}}$ New, W:Add, Z:Discontinued, F:Interchangeable by set, K:Q'ty Change

Copyright (C) 2014 YANMAR CO., LTD. All RightsReserved.

Fig.18. FRONT SUPPORT

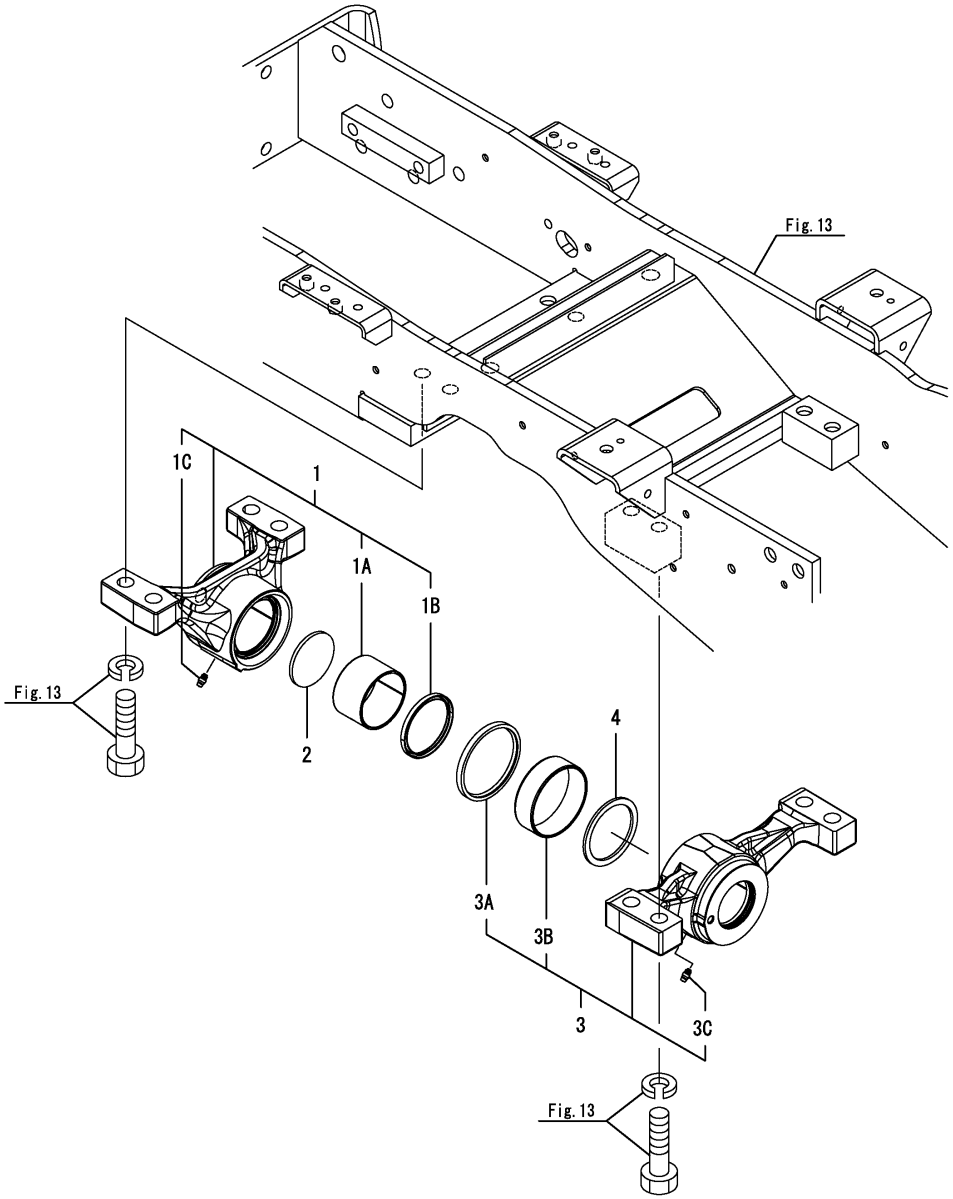

(A)=EG326Y (D)=EG334Y
(B)=EG328Y (E)=
(C)=EG330Y (F)=

No.	Lev.	Parts No.	Description	Q'ty (A)	(B)	(C)	(D)	(E)	(F)	I	R
1	1	1A7180-11600	SUPPORT ASSY, AXLE F	1	1	1	1				
1A	2	1A7180-11620	BUSH, 60X65X40	1	1	1	1			W	
	(A=F100008)	(B=F200001)	(C=F300001) (D=F400004)								
1B	2	1A7180-11630	SEAL, VB607005	1	1	1	1			W	
	(A=F100008)	(B=F200001)	(C=F300001) (D=F400004)								
1C	2	24761-010000	NIPPLE, GREASE M6F	1	1	1	1			W	
	(A=F100008)	(B=F200001)	(C=F300001) (D=F400004)								
2	1	1A7180-11650	WASHER, 60X4	1	1	1	1				
3	1	1A7180-11700	SUPPORT ASSY, AXLE R	1	1	1	1				
3A	2	194181-11560	SEAL, OIL VB75856.5	1	1	1	1			W	
	(A=F100008)	(B=F200001)	(C=F300001) (D=F400004)								
3B	2	1A7180-11720	BUSH, 75X80X40	1	1	1	1			W	
	(A=F100008)	(B=F200001)	(C=F300001) (D=F400004)								
3C	2	24761-010000	NIPPLE, GREASE M6F	1	1	1	1			W	
	(A=F100008)	(B=F200001)	(C=F300001) (D=F400004)								
4	1	198283-13480	WASHER, 62X75X3	1	1	1	1				

N:Old $\xleftarrow[\text{No}]{\text{Yes}}$ New, Q:Old $\xleftarrow[\text{Yes}]{\text{No}}$ New, R:Old $\xleftarrow[\text{Yes}]{\text{Yes}}$ New, S:Old $\xleftarrow[\text{No}]{\text{No}}$ New, W:Add, Z:Discontinued, F:Interchangeable by set, K:Q'ty Change

Copyright (C) 2014 YANMAR CO., LTD. All RightsReserved.

Fig.19. TIE ROD

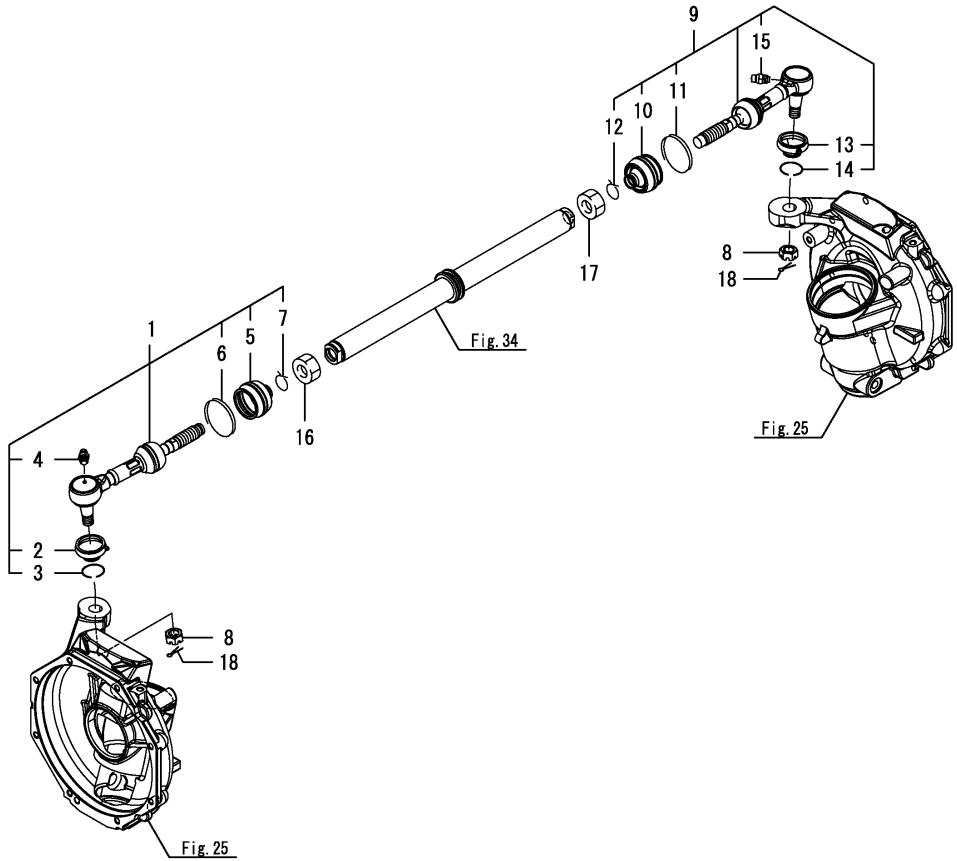

(A)=EG326Y (D)=EG334Y
(B)=EG328Y (E)=
(C)=EG330Y (F)=

No.	Lev.	Parts No.	Description	Q'ty (A)	(B)	(C)	(D)	(E)	(F)	I	R
1	1	1A7140-12310	TIE-ROD ASSY, L	1	1	1	1				
2	2	194450-12552	COVER, DUST	1	1	1	1				
3	2	194450-12562	RING, SETTING	1	1	1	1				
4	2	24761-060000	NIPPLE, GREASE MT6X1	1	1	1	1				
5	2	198072-12440	COVER, DUCT	1	1	1	1				
6	2	198071-12451	RING SET	1	1	1	1				
7	2	198071-12460	CLIP	1	1	1	1				
8	1	194180-12471	NUT, CASTLE M16	2	2	2	2				
9	1	1A7140-12610	TIE-ROD ASSY, R	1	1	1	1				
10	2	198072-12440	COVER, DUCT	1	1	1	1				
11	2	198071-12451	RING SET	1	1	1	1				
12	2	198071-12460	CLIP	1	1	1	1				
13	2	194450-12552	COVER, DUST	1	1	1	1				
14	2	194450-12562	RING, SETTING	1	1	1	1				
15	2	24761-060000	NIPPLE, GREASE MT6X1	1	1	1	1				
16	1	1A7180-12710	NUT, M20	1	1	1	1				
17	1	1A7180-12720	NUT, M20 L	1	1	1	1				
18	1	22417-400400	PIN, COTTER 4.0X40	2	2	2	2				

N:Old $\overset{\text{Yes}}{\underset{\text{No}}{\leftrightarrows}}$ New, Q:Old $\overset{\text{No}}{\underset{\text{Yes}}{\leftrightarrows}}$ New, R:Old $\overset{\text{Yes}}{\underset{\text{Yes}}{\leftrightarrows}}$ New, S:Old $\overset{\text{No}}{\underset{\text{No}}{\leftrightarrows}}$ New, W:Add, Z:Discontinued, F:Interchangeable by set, K:Q'ty Change

Copyright (C) 2014 YANMAR CO., LTD. All RightsReserved.

Fig.20. RING GEAR

(A)=EG326Y (D)=EG334Y
(B)=EG328Y (E)=
(C)=EG330Y (F)=

No.	Lev.	Parts No.	Description	Q'ty (A)	(B)	(C)	(D)	(E)	(F)	I	R
1	1	1A7180-13101	GEAR ASSY, RING	1	1	1	1				
2	1	1A7180-13150	COLLAR, 52.5X60.5X16	1	1	1	1				
3	1	1A7180-13380	COLLAR, 58X62X4.8	1	1	1	1				
4	1	1A7180-13390	COLLAR, 58X62X4.9	1	1	1	1				
5	1	1A7180-13400	COLLAR, 58X62X5.0	2	2	2	2				
6	1	1A7180-13410	COLLAR, 58X62X5.1	1	1	1	1				
7	1	1A7180-13420	COLLAR, 58X62X5.2	1	1	1	1				
8	1	198251-13670	COLLAR, SEAL	1	1	1	1				
9	1	24141-320070	BEARING, 32007	2	2	2	2				
10	1	24341-000315	O-RING, 1AS31.5	1	1	1	1				

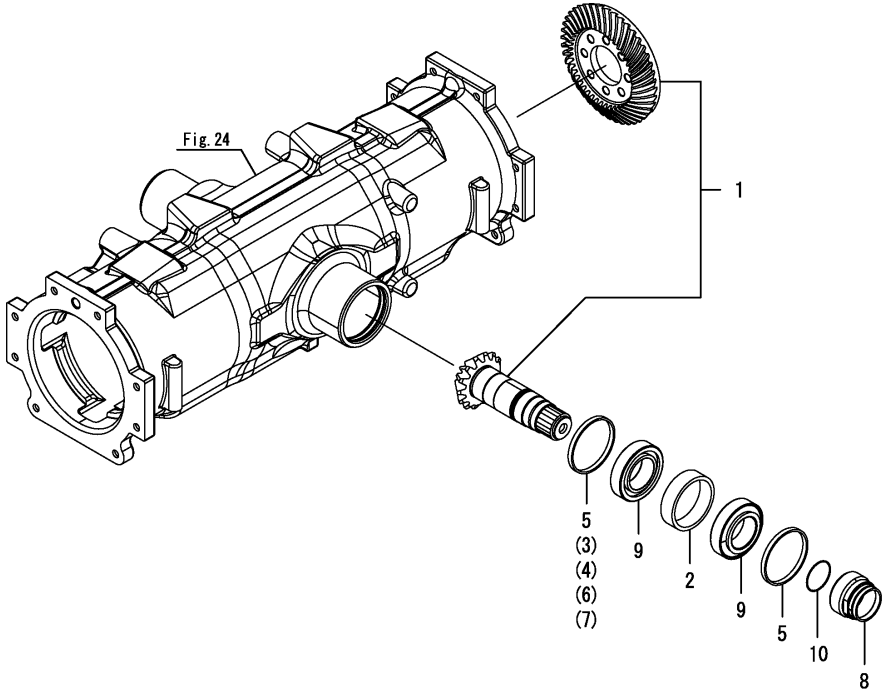

N:Old $\xleftrightarrow[\text{No}]{\text{Yes}}$ New, Q:Old $\xleftrightarrow[\text{Yes}]{\text{No}}$ New, R:Old $\xleftrightarrow[\text{Yes}]{\text{Yes}}$ New, S:Old $\xleftrightarrow[\text{No}]{\text{No}}$ New, W:Add, Z:Discontinued, F:Interchangeable by set, K:Q'ty Change

Copyright (C) 2014 YANMAR CO., LTD. All RightsReserved.

Fig.21. DIFFERENTIAL GEAR

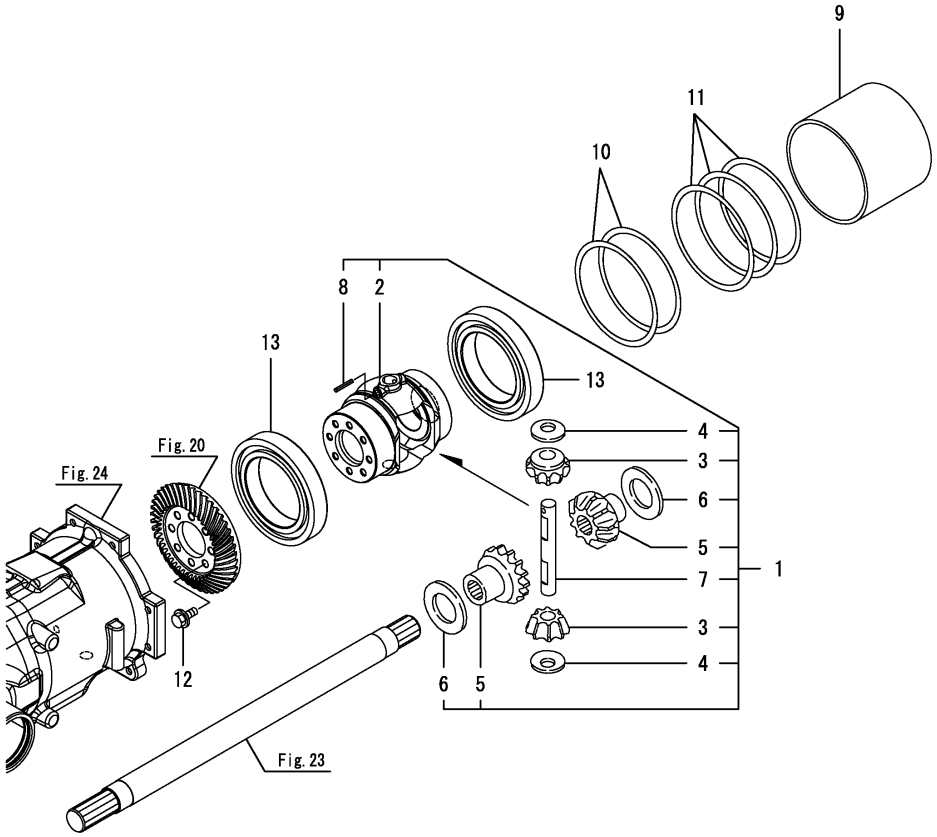

(A)=EG326Y (D)=EG334Y
(B)=EG328Y (E)=
(C)=EG330Y (F)=

No.	Lev.	Parts No.	Description	Q'ty (A)	(B)	(C)	(D)	(E)	(F)	I	R
1	1	1A7180-13201	HOUSING ASSY	1	1	1	1				
2	2	1A7180-13211	CASE, DIFFERENTIAL	1	1	1	1				
3	2	194321-13230	PINION, DIFFERENTIAL	2	2	2	2				
4	2	194465-13240	LINER, DIFFERENTIAL	2	2	2	2				
5	2	194321-13250	GEAR, DIFFERENTIAL	2	2	2	2				
6	2	194465-13260	WASHER, DIFFERENTIAL	2	2	2	2				
7	2	194321-13270	SHAFT, DIFFERENTIAL	1	1	1	1				
8	2	22351-060040	PIN, SPRING 6.0X40	1	1	1	1				
9	1	1A7180-13250	COLLAR	1	1	1	1				
10	1	1A7180-13260	SHIM, DIFFERENTIAL A	2	2	2	2				
11	1	1A7180-13270	SHIM, DIFFERENTIAL B	3	3	3	3				
12	1	198165-21490	BOLT, M8X20	8	8	8	8				
13	1	24101-060174	BEARING, BALL 6017	2	2	2	2				

N:Old $\xleftrightarrow[\text{No}]{\text{Yes}}$ New, Q:Old $\xleftrightarrow[\text{Yes}]{\text{No}}$ New, R:Old $\xleftrightarrow[\text{Yes}]{\text{Yes}}$ New, S:Old $\xleftrightarrow[\text{No}]{\text{No}}$ New, W:Add, Z:Discontinued, F:Interchangeable by set, K:Q'ty Change

Copyright (C) 2014 YANMAR CO., LTD. All RightsReserved.

Fig.22. PROPELLER SHAFT

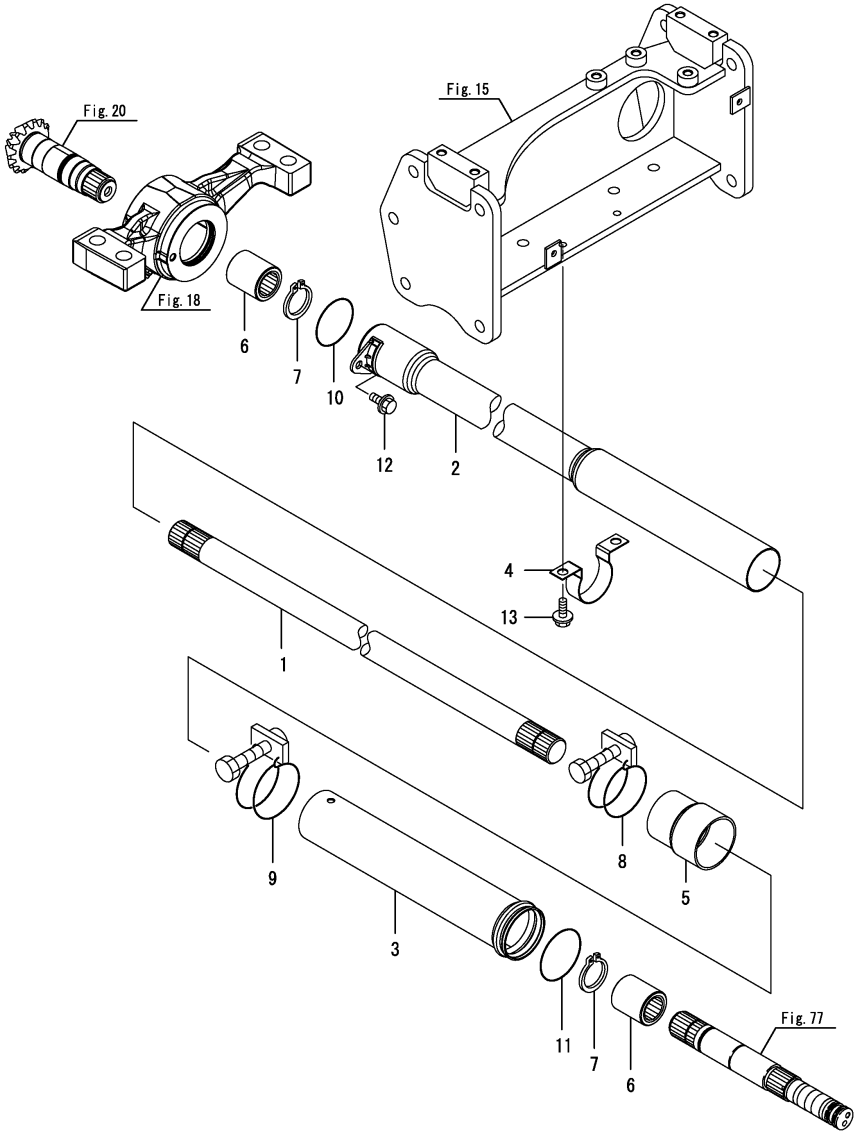

(A)=EG326Y (B)=EG328Y (C)=EG330Y (D)=EG334Y (E)= (F)=

No.	Lev.	Parts No.	Description	Q'ty (A)	(B)	(C)	(D)	(E)	(F)	I	R
1	1	1A7140-13300	SHAFT, PROPELLER	1	1	1	1				
2	1	1A7140-14610	COVER, SHAFT FRONT	1	1	1	1				
3	1	1A7180-14620	COVER, SHAFT REAR	1	1	1	1				
3-1	1	1A7180-14621	COVER, SHAFT REAR	1	1	1	1				R
	(A=F100212)	(B=F200185)	(C=F300779) (D=F400972)								
4	1	1A7180-14630	STAY, SHAFT COVER F	1	1	1	1				
5	1	198241-14650	BOOT, SHAFT COVER	1	1	1	1				
6	1	194640-26130	COUPLING, PTO	2	2	2	2				
7	1	22242-000300	RING, 30	2	2	2	2				
8	1	23010-060000	CLAMP, 60	1	1	1	1				
9	1	23010-065000	CLAMP, 65	1	1	1	1				
10	1	24321-000500	O-RING, 1AG50.0	1	1	1	1				
11	1	24321-000550	O-RING, 1AG55.0	1	1	1	1				
12	1	26106-080122	BOLT, M8X 12 PLATED	1	1	1	1				
13	1	26106-080122	BOLT, M8X 12 PLATED	2	2	2	2				

Remarks
* Applied to the following models.
EG326, EG328, EG330, EG334
EG330A (Cabin specification), EG334A (Cabin specification)

N:Old $\xleftrightarrow[\text{No}]{\text{Yes}}$ New, Q:Old $\xleftrightarrow[\text{Yes}]{\text{No}}$ New, R:Old $\xleftrightarrow[\text{Yes}]{\text{Yes}}$ New, S:Old $\xleftrightarrow[\text{No}]{\text{No}}$ New, W:Add, Z:Discontinued, F:Interchangeable by set, K:Q'ty Change

Copyright (C) 2014 YANMAR CO., LTD. All RightsReserved.

Fig.227. PROPELLER SHAFT(A,K,KW,KWA)

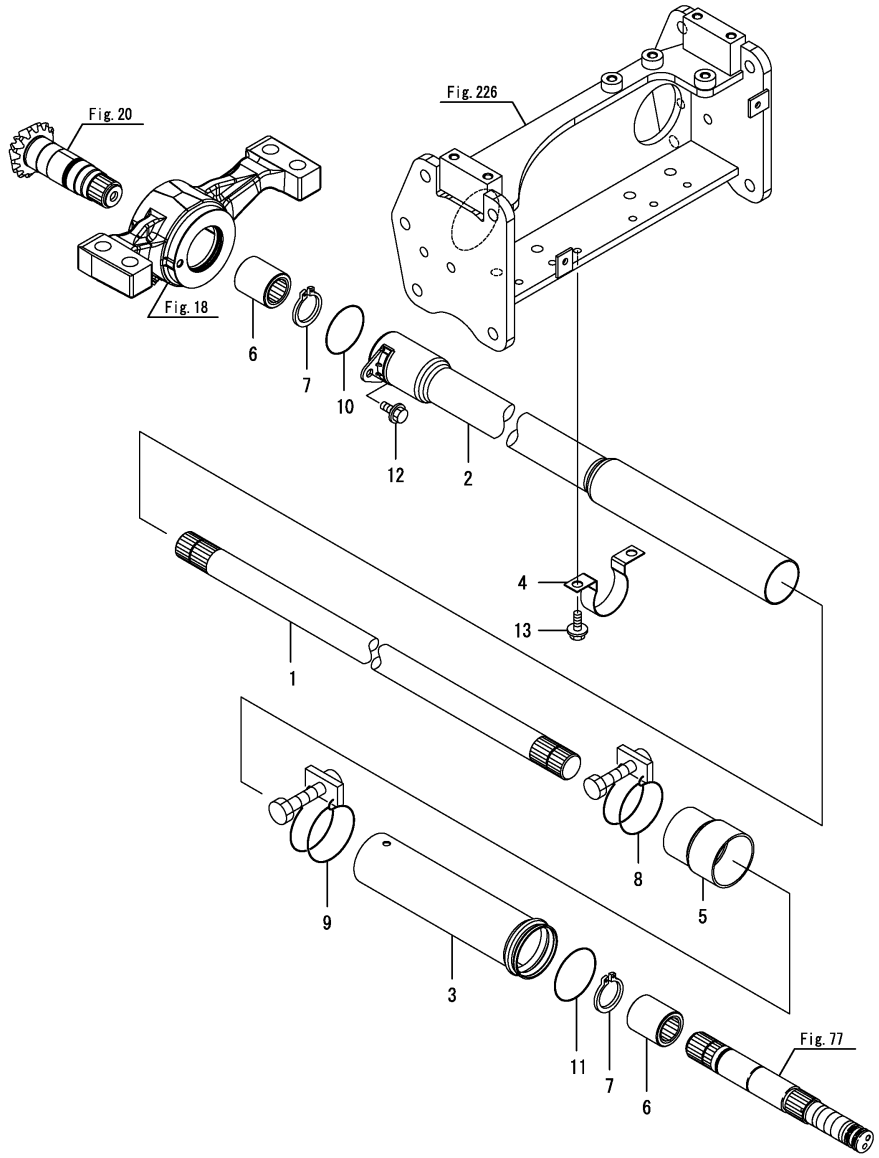

(A)=EG326Y (D)=EG334Y
(B)=EG328Y (E)=
(C)=EG330Y (F)=

No.	Lev.	Parts No.	Description	Q'ty (A)	(B)	(C)	(D)	(E)	(F)	I	R
1	1	1A7160-13300	SHAFT, PROPELLER			1	1				
2	1	1A7160-14610	COVER, SHAFT FRONT			1	1				
3	1	1A7160-14620	COVER, SHAFT REAR			1	1				
4	1	1A7180-14630	STAY, SHAFT COVER F			1	1				
5	1	198241-14650	BOOT, SHAFT COVER			1	1				
6	1	194640-26130	COUPLING, PTO			2	2				
7	1	22242-000300	RING, 30			2	2				
8	1	23010-060000	CLAMP, 60			1	1				
9	1	23010-065000	CLAMP, 65			1	1				
10	1	24321-000500	O-RING, 1AG50.0			1	1				
11	1	24321-000550	O-RING, 1AG55.0			1	1				
12	1	26106-080122	BOLT, M8X 12 PLATED			1	1				
13	1	26106-080122	BOLT, M8X 12 PLATED			2	2				

Remarks
* Applied to the following models.
EG330A(Rops specification), EG330K, EG330KW, EG334A(Rops specification), EG334KW, EG334KWA

N:Old $\frac{\text{Yes}}{\text{No}}$ New, Q:Old $\frac{\text{No}}{\text{Yes}}$ New, R:Old $\frac{\text{Yes}}{\text{Yes}}$ New, S:Old $\frac{\text{No}}{\text{No}}$ New, W:Add, Z:Discontinued, F:Interchangeable by set, K:Q'ty Change

Copyright (C) 2014 YANMAR CO., LTD. All RightsReserved.

Fig.23. FRONT SHAFT(1)

(A)=EG326Y (D)=EG334Y
(B)=EG328Y (E)=
(C)=EG330Y (F)=

No.	Lev.	Parts No.	Description	Q'ty (A)	(B)	(C)	(D)	(E)	(F)	I	R
1	1	1A7140-13520	PINION, SHAFT Z=12	2	2	2	2				
2	1	1A7140-13560	SHAFT, FRONT 1ST L	1	1	1	1				
3	1	1A7140-13570	SHAFT, FRONT 1ST R	1	1	1	1				
4	1	24101-062094	BEARING, BALL 6209	2	2	2	2				

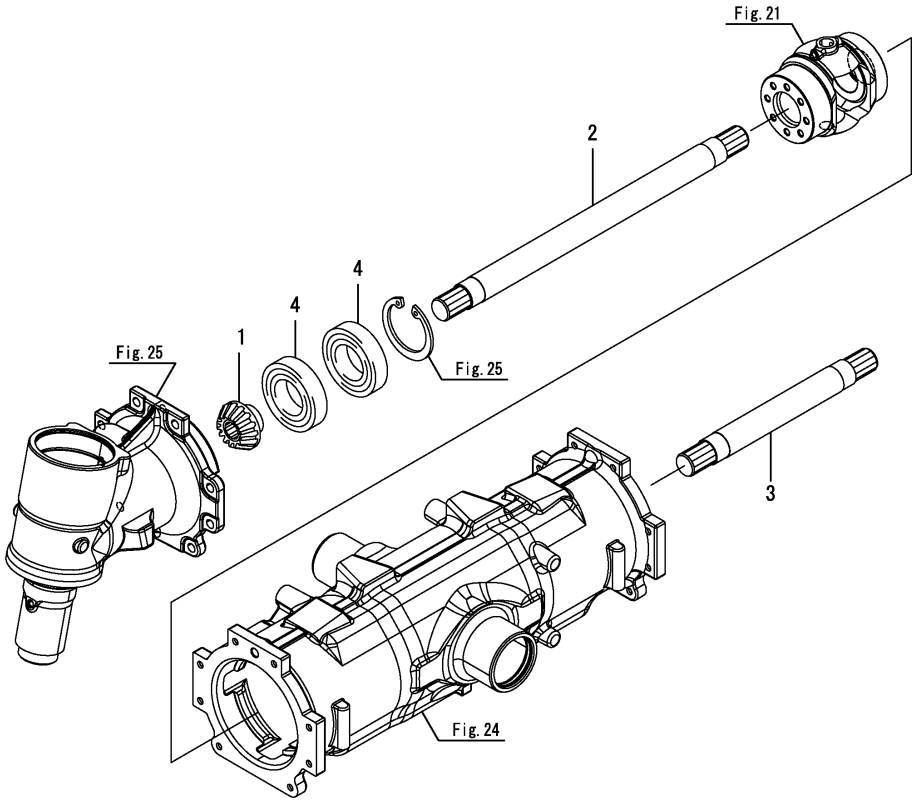

N:Old $\xleftrightarrow[\text{No}]{\text{Yes}}$ New, Q:Old $\xleftrightarrow[\text{Yes}]{\text{No}}$ New, R:Old $\xleftrightarrow[\text{Yes}]{\text{Yes}}$ New, S:Old $\xleftrightarrow[\text{No}]{\text{No}}$ New, W:Add, Z:Discontinued, F:Interchangeable by set, K:Q'ty Change

Copyright (C) 2014 YANMAR CO., LTD. All RightsReserved.

Fig.24. FRONT AXLE CASE

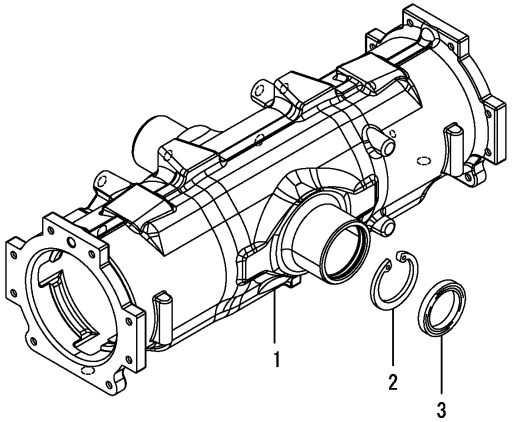

(A)=EG326Y (D)=EG334Y
(B)=EG328Y (E)=
(C)=EG330Y (F)=

No.	Lev.	Parts No.	Description	Q'ty (A)	(B)	(C)	(D)	(E)	(F)	I	R
1	1	1A7180-13610	HOUSING, FRONT AXLE	1	1	1	1				
2	1	22252-000620	RING, 62	1	1	1	1				
3	1	24421-456209	SEAL, OIL TC456209	1	1	1	1				

N:Old ◄Yes/No► New, Q:Old ◄No/Yes► New, R:Old ◄Yes/Yes► New, S:Old ◄No/No► New, W:Add, Z:Discontinued, F:Interchangeable by set, K:Q'ty Change

Copyright (C) 2014 YANMAR CO., LTD. All RightsReserved.

Fig.25. FRONT GEAR CASE

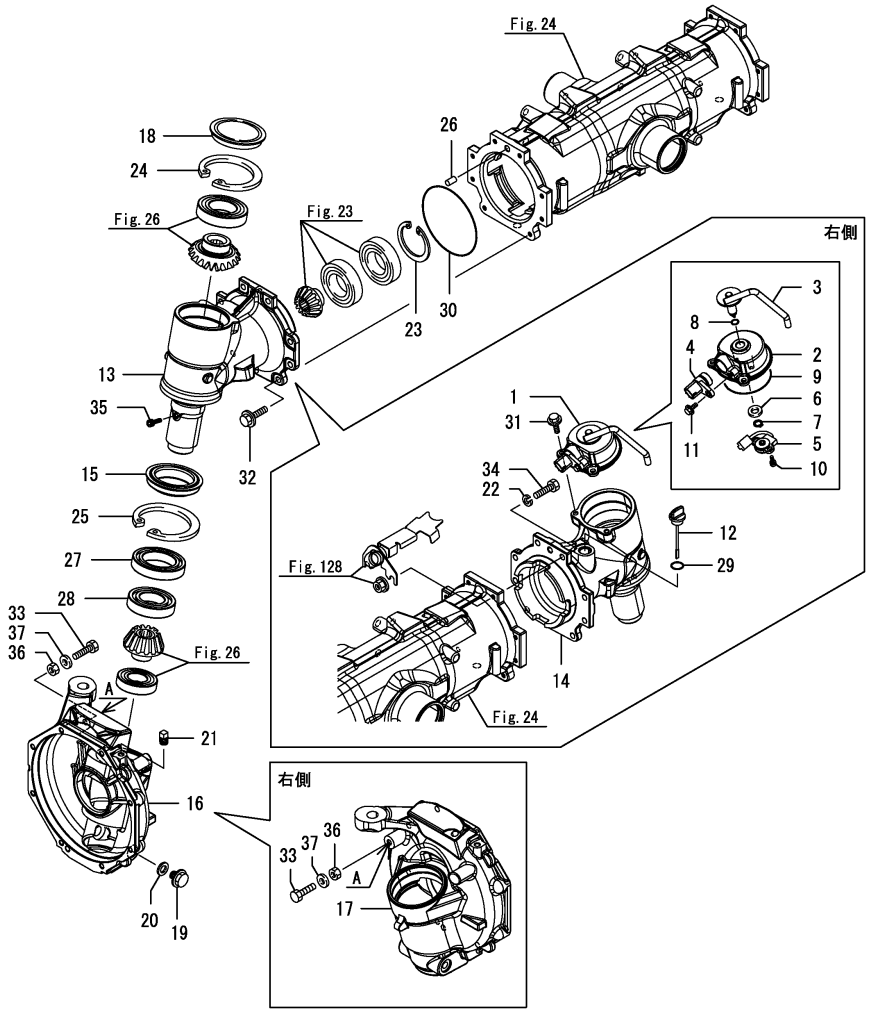

(A)=EG326Y (D)=EG334Y
(B)=EG328Y (E)=
(C)=EG330Y (F)=

No.	Lev.	Parts No.	Description	Q'ty (A)	(B)	(C)	(D)	(E)	(F)	I	R
1	1	1A7140-13620	SENSOR, STEERING	1	1	1	1				
2	2	1A7180-13630	COVER, GEAR CASE	1	1	1	1				
3	2	1A7140-13640	ARM, SENSOR	1	1	1	1				
4	2	1A7180-52050	CONNECTOR, ADAPTER	1	1	1	1				
5	2	1A7180-52500	SENSOR, POTENTIO	1	1	1	1				
6	2	22117-120000	WASHER, 12	1	1	1	1				
7	2	22242-000120	RING, 12	1	1	1	1				
8	2	24311-000110	O-RING, 1AP11.0	1	1	1	1				
9	2	24321-000850	O-RING, 1AG85.0	1	1	1	1				
10	2	26022-050162	SCREW, M5X16	2	2	2	2				
11	2	26106-060162	BOLT, M6X 16 PLATED	1	1	1	1				
12	1	194066-13640	PLUG, 20	1	1	1	1				
13	1	1A7140-13710	HOUSING, FRONT GEAR	1	1	1	1				
14	1	1A7140-13720	HOUSING, FRONT GEAR	1	1	1	1				
15	1	198072-13760	SEAL, QLF709521.5	2	2	2	2				
16	1	1A7140-13770	BOX, GEAR	1	1	1	1				
16-1	1	1A7140-13771	GEARBOX, FRONT L	1	1	1	1			F	1
	(A=F100008)	(B=F200001)	(C=F300001)	(D=F400004)							
17	1	1A7140-13780	BOX, GEAR	1	1	1	1				
17-1	1	1A7140-13781	GEARBOX, FRONT R	1	1	1	1			F	2
	(A=F100008)	(B=F200001)	(C=F300001)	(D=F400004)							
18	1	1C7100-15100	PLUG, BORE 90	1	1	1	1				
19	1	1C6900-23120	BOLT, DRAIN M14X10	2	2	2	2				
20	1	1C6900-23150	WASHER, PLUG	2	2	2	2				
21	1	194151-36670	PLUG, PF02	2	2	2	2				
22	1	22217-100000	WASHER, SPRING 10	2	2	2	2				
23	1	22252-000850	RING, 85	2	2	2	2				
24	1	22252-000900	RING, 90	2	2	2	2				
25	1	22252-000950	RING, 95	2	2	2	2				
26	1	22312-100180	PIN, PARALLEL M10X18	2	2	2	2				
27	1	24101-060124	BEARING, BALL 6012	2	2	2	2				
28	1	24101-062094	BEARING, BALL 6209	2	2	2	2				
29	1	24311-000180	O-RING, 1AP18.0	1	1	1	1				
30	1	24321-001300	O-RING, 1AG130.0	2	2	2	2				
31	1	26106-080162	BOLT, M8X 16 PLATED	2	2	2	2				
32	1	26106-100302	BOLT, M10X 30 PLATED	14	14	14	14				
33	1	26116-100252	BOLT, M10X 25 PLATED	2	2	2	2				
33-1	1	26116-100354	BOLT, M10X 35 PLATED	2	2	2	2			N	
	(A=F090849)	(B=F080705)	(C=F072078)	(D=F061928)							
34	1	26116-100404	BOLT, M10X 40 PLATED	2	2	2	2				
35	1	26450-080122	BOLT, M8X 12	2	2	2	2				
36	1	26756-100002	NUT, LOCK M10	2	2	2	2				
36-1	1	26716-100002	NUT, M10	2	2	2	2			S	
	(A=F100008)	(B=F200001)	(C=F300001)	(D=F400004)							
37	1	22137-100000	WASHER, 10	2	2	2	2			W	
	(A=F090506)	(B=F080409)	(C=F071110)	(D=F061025)							
37-1	1	22137-100000	WASHER, 10	2	2	2	2			Z	
	(A=F090849)	(B=F080705)	(C=F072078)	(D=F061928)							

Remarks
(1)No.16 & 36 is interchangeable with a set of No.16-1 & 36-1.
(2)No.17 & 36 is interchangeable with a set of No.17-1 & 36-1.
A hole depth=No16 & 17 : 19mm, 16-1 & 17-1 : 17mm.

N:Old $\xleftarrow[\text{No}]{\text{Yes}}$ New, Q:Old $\xleftarrow[\text{Yes}]{\text{No}}$ New, R:Old $\xleftarrow[\text{Yes}]{\text{Yes}}$ New, S:Old $\xleftarrow[\text{No}]{\text{No}}$ New, W:Add, Z:Discontinued, F:Interchangeable by set, K:Q'ty Change

Copyright (C) 2014 YANMAR CO., LTD. All RightsReserved.

Fig.26. FRONT SHAFT(2)

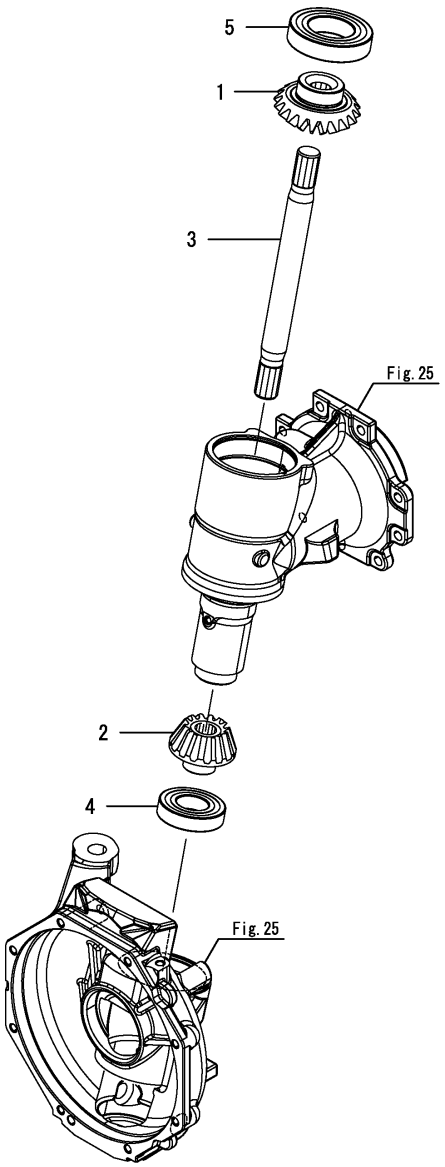

(A)=EG326Y (D)=EG334Y
(B)=EG328Y (E)=
(C)=EG330Y (F)=

No.	Lev.	Parts No.	Description	Q'ty (A)	(B)	(C)	(D)	(E)	(F)	I	R
1	1	1A7180-13820	GEAR, FRONT SHAFT 15	2	2	2	2				
2	1	1A7180-13830	PINION, FINAL Z=11	2	2	2	2				
3	1	1A7140-13870	SHAFT, FRONT 2ND	2	2	2	2				
4	1	1A7180-13880	BEARING, TM207UR	2	2	2	2				
5	1	24104-062104	BEARING, BALL 6210UU	2	2	2	2				

N:Old $\xleftrightarrow[\text{No}]{\text{Yes}}$ New, Q:Old $\xleftrightarrow[\text{Yes}]{\text{No}}$ New, R:Old $\xleftrightarrow[\text{Yes}]{\text{Yes}}$ New, S:Old $\xleftrightarrow[\text{No}]{\text{No}}$ New, W:Add, Z:Discontinued, F:Interchangeable by set, K:Q'ty Change

Copyright (C) 2014 YANMAR CO., LTD. All RightsReserved.

Fig.27. FRONT SPINDLE

(A)=EG326Y
(B)=EG328Y
(C)=EG330Y
(D)=EG334Y
(E)=
(F)=

No.	Lev.	Parts No.	Description	Q'ty (A)	(B)	(C)	(D)	(E)	(F)	I	R
1	1	1A7180-13790	CASE, FRONT BEARING	2	2	2	2				
2	1	1A7180-13840	GEAR, FINAL 49	2	2	2	2				
3	1	1A7180-14110	SPINDLE, FRONT	2	2	2	2				
4	1	198200-14210	RING, HALF	4	4	4	4				
5	1	198475-32660	SEAL, QLNY527514.5	2	2	2	2				
6	1	24101-062084	BEARING, BALL 6208	2	2	2	2				
7	1	24101-062094	BEARING, BALL 6209	2	2	2	2				
8	1	24321-002300	O-RING, 1AG230.0	2	2	2	2				
9	1	26106-100302	BOLT, M10X 30 PLATED	16	16	16	16				

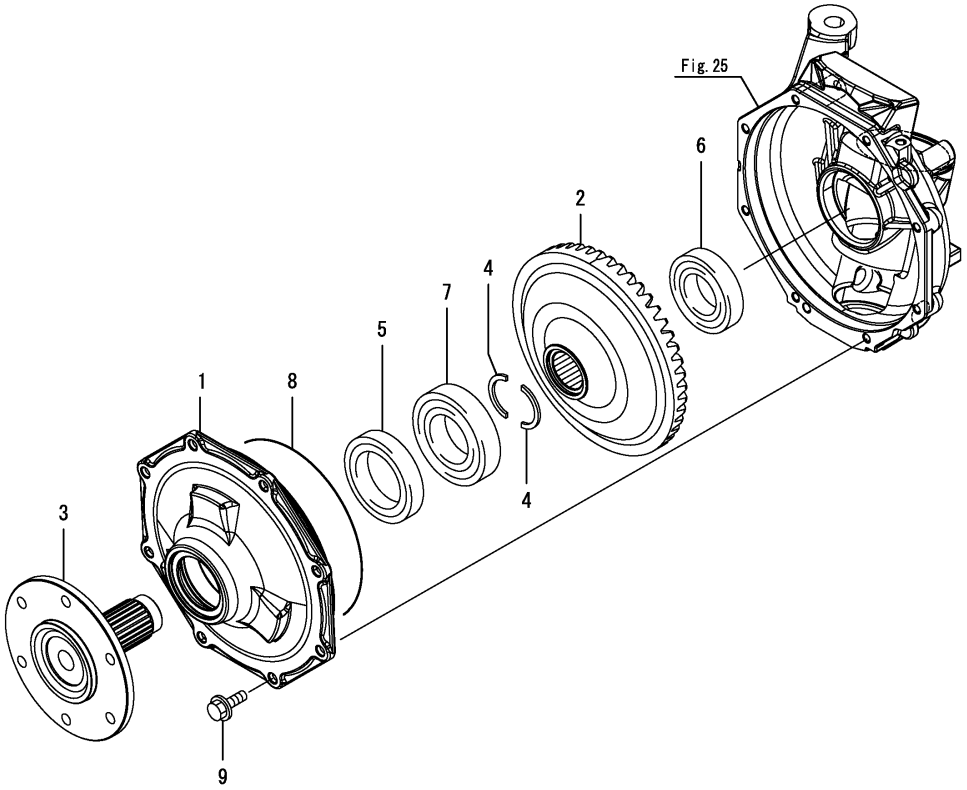

N:Old $\frac{\text{Yes}}{\text{No}}$ New, Q:Old $\frac{\text{No}}{\text{Yes}}$ New, R:Old $\frac{\text{Yes}}{\text{Yes}}$ New, S:Old $\frac{\text{No}}{\text{No}}$ New, W:Add, Z:Discontinued, F:Interchangeable by set, K:Q'ty Change

Copyright (C) 2014 YANMAR CO., LTD. All RightsReserved.

Fig.28. FRONT WHEEL TIRE

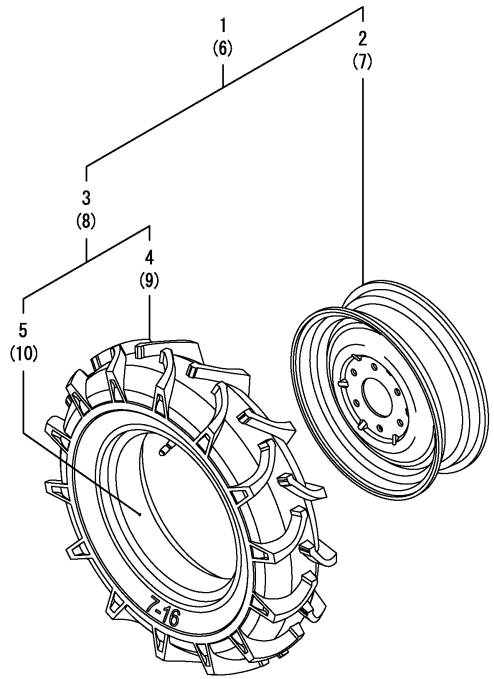

(A)=EG326Y (B)=EG328Y (C)=EG330Y (D)=EG334Y (E)= (F)=

No.	Lev.	Parts No.	Description	Q'ty (A)	(B)	(C)	(D)	(E)	(F)	I	R
1	1	198133-14750	TIRE KIT, FRONT L	1	1	1	1				
1-1	1	1A7140-14700	TIRE KIT, 7-16 L	1	1	1	1				R
	(A=F090641)	(B=F080533)	(C=F071518) (D=F061384)								
2	2	194279-14700	WHEEL	1	1	1	1				
2-1	2	1A7140-14760	WHEEL ASSY, 5JA X 16	1	1	1	1				R
	(A=F090641)	(B=F080533)	(C=F071518) (D=F061384)								
3	2	198133-14760	TIRE ASSY, 7-16-4	1	1	1	1				
4	3	198133-14770	TIRE, 7-16 4 AR-2	1	1	1	1				
5	3	198133-14780	TUBE, 7-16	1	1	1	1				
6	1	198133-14850	TIRE KIT, FRONT R	1	1	1	1				
6-1	1	1A7140-14800	TIRE KIT, 7-16 R	1	1	1	1				R
	(A=F090641)	(B=F080533)	(C=F071518) (D=F061384)								
7	2	194279-14700	WHEEL	1	1	1	1				
7-1	2	1A7140-14760	WHEEL ASSY, 5JA X 16	1	1	1	1				R
	(A=F090641)	(B=F080533)	(C=F071518) (D=F061384)								
8	2	198133-14760	TIRE ASSY, 7-16-4	1	1	1	1				
9	3	198133-14770	TIRE, 7-16 4 AR-2	1	1	1	1				
10	3	198133-14780	TUBE, 7-16	1	1	1	1				

Remarks
* Applied to the following models.
EG326, EG328, EG330KW, EG334KW

N:Old $\xleftrightarrow[\text{No}]{\text{Yes}}$ New, Q:Old $\xleftrightarrow[\text{Yes}]{\text{No}}$ New, R:Old $\xleftrightarrow[\text{Yes}]{\text{Yes}}$ New, S:Old $\xleftrightarrow[\text{No}]{\text{No}}$ New, W:Add, Z:Discontinued, F:Interchangeable by set, K:Q'ty Change

Copyright (C) 2014 YANMAR CO., LTD. All RightsReserved.

Fig.29. FRONT WHEEL TIRE

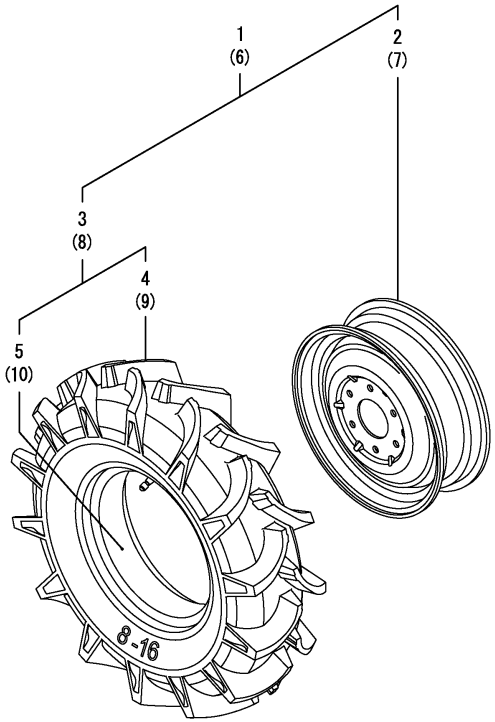

(A)=EG326Y (B)=EG328Y (C)=EG330Y (D)=EG334Y (E)= (F)=

No.	Lev.	Parts No.	Description	Q'ty (A)	(B)	(C)	(D)	(E)	(F)	I	R
1	1	1A7160-14700	TIRE, FRONT 8-16 L			1	1				
2	2	198366-14700	WHEEL ASSY,5JAX16WDC			1	1				
2-1	2	198366-14701	WHEEL ASSY, 5JAX16			1	1			R	
			(C=F072009) (D=F061827)								
3	2	198137-14710	TIRE ASSY, 8-18-4			1	1				
4	3	198137-14720	TIRE, 8-16 4 AR-2			1	1				
5	3	198137-14730	TUBE, 8-16			1	1				
6	1	1A7160-14800	TIRE, FRONT 8-16 R			1	1				
7	2	198366-14700	WHEEL ASSY,5JAX16WDC			1	1				
7-1	2	198366-14701	WHEEL ASSY, 5JAX16			1	1			R	
			(C=F072009) (D=F061827)								
8	2	198137-14710	TIRE ASSY, 8-18-4			1	1				
9	3	198137-14720	TIRE, 8-16 4 AR-2			1	1				
10	3	198137-14730	TUBE, 8-16			1	1				

Remarks
* Applied to the following models.
EG330, EG330S, EG334, EG334S

N:Old $\xleftrightarrow[\text{No}]{\text{Yes}}$ New, Q:Old $\xleftrightarrow[\text{Yes}]{\text{No}}$ New, R:Old $\xleftrightarrow[\text{Yes}]{\text{Yes}}$ New, S:Old $\xleftrightarrow[\text{No}]{\text{No}}$ New, W:Add, Z:Discontinued, F:Interchangeable by set, K:Q'ty Change

Copyright (C) 2014 YANMAR CO., LTD. All RightsReserved.

Fig.228. FRONT WHEEL TIRE(K)

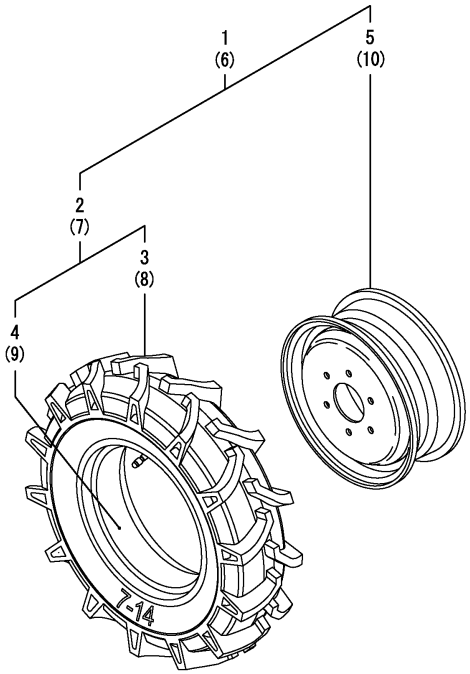

(A)=EG326Y
(B)=EG328Y
(C)=EG330Y
(D)=EG334Y
(E)=
(F)=

No.	Lev.	Parts No.	Description	Q'ty (A)	(B)	(C)	(D)	(E)	(F)	I	R
1	1	198073-14750	TIRE KIT, FRONT L			1					
2	2	194171-14800	TIRE, FRONT			1					
3	3	194171-14810	TIRE, 7-14 4 FSLM			1					
4	3	194171-14820	TUBE, 7-14			1					
5	2	198071-14810	WHEEL, 5JAX14WDC			1					
6	1	198073-14850	TIRE KIT, FRONT R			1					
7	2	194171-14800	TIRE, FRONT			1					
8	3	194171-14810	TIRE, 7-14 4 FSLM			1					
9	3	194171-14820	TUBE, 7-14			1					
10	2	198071-14810	WHEEL, 5JAX14WDC			1					

Remarks
* Applied to the following models.
EG330K

N:Old $\xleftrightarrow[\text{No}]{\text{Yes}}$ New, Q:Old $\xleftrightarrow[\text{Yes}]{\text{No}}$ New, R:Old $\xleftrightarrow[\text{Yes}]{\text{Yes}}$ New, S:Old $\xleftrightarrow[\text{No}]{\text{No}}$ New, W:Add, Z:Discontinued, F:Interchangeable by set, K:Q'ty Change

Copyright (C) 2014 YANMAR CO., LTD. All RightsReserved.

Fig.229. FRONT WHEEL TIRE(A)

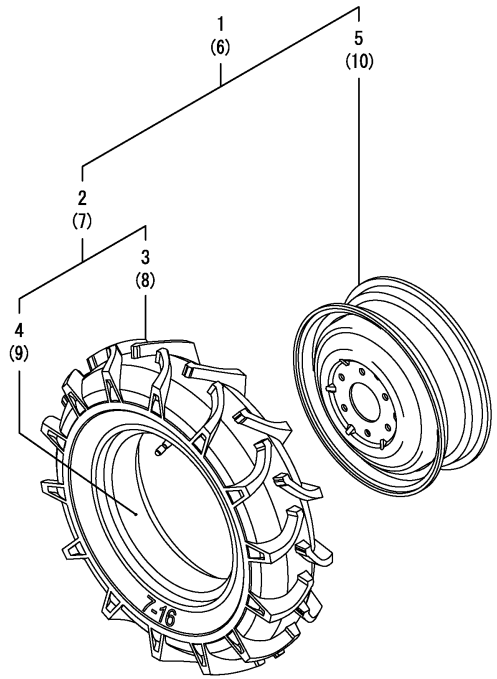

(A)=EG326Y (D)=EG334Y
(B)=EG328Y (E)=
(C)=EG330Y (F)=

No.	Lev.	Parts No.	Description	Q'ty (A)	(B)	(C)	(D)	(E)	(F)	I	R
1	1	1A7160-14750	TIRE&WHEEL UNIT,L.H.			1	1				
2	2	198133-14760	TIRE ASSY, 7-16-4			1	1				
3	3	198133-14770	TIRE, 7-16 4 AR-2			1	1				
4	3	198133-14780	TUBE, 7-16			1	1				
5	2	1A7160-14760	WHEEL ASSY, 5JAX16			1	1				
5-1	2	1A7160-14761	WHEEL ASSY, 5JAX16 (C=F072009) (D=F061827)			1	1			R	
6	1	1A7160-14850	TIRE&WHEEL UNIT,R.H.			1	1				
7	2	198133-14760	TIRE ASSY, 7-16-4			1	1				
8	3	198133-14770	TIRE, 7-16 4 AR-2			1	1				
9	3	198133-14780	TUBE, 7-16			1	1				
10	2	1A7160-14760	WHEEL ASSY, 5JAX16			1	1				
10-1	2	1A7160-14761	WHEEL ASSY, 5JAX16 (C=F072009) (D=F061827)			1	1			R	

Remarks
* Applied to the following models.
EG330A, EG334A

N:Old $\xleftrightarrow[\text{No}]{\text{Yes}}$ New, Q:Old $\xleftrightarrow[\text{Yes}]{\text{No}}$ New, R:Old $\xleftrightarrow[\text{Yes}]{\text{Yes}}$ New, S:Old $\xleftrightarrow[\text{No}]{\text{No}}$ New, W:Add, Z:Discontinued, F:Interchangeable by set, K:Q'ty Change

Copyright (C) 2014 YANMAR CO., LTD. All RightsReserved.

Fig.276. FRONT WHEEL TIRE

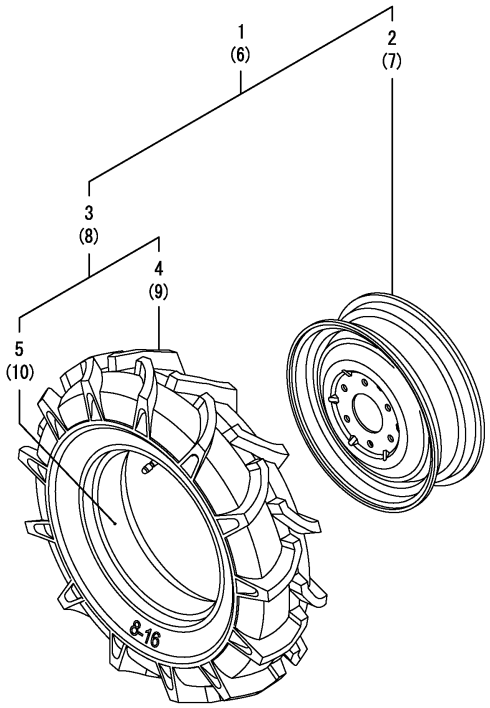

(A)=EG326Y (B)=EG328Y (C)=EG330Y (D)=EG334Y (E)= (F)=

No.	Lev.	Parts No.	Description	Q'ty (A)	(B)	(C)	(D)	(E)	(F)	I	R
1	1	1A7160-14710	TIRE&WHEEL UNIT,L.H.			1	1				
2	2	198366-14700	WHEEL ASSY,5JAX16WDC			1	1				
2-1	2	198366-14701	WHEEL ASSY, 5JAX16			1	1			R	
			(C=F072009) (D=F061827)								
3	2	194328-14810	TIRE ASSY, FRONT			1	1				
4	3	194328-14820	TIRE, 8-16 4 FSLM			1	1				
5	3	194328-14830	TUBE			1	1				
6	1	1A7160-14810	TIRE&WHEEL UNIT,R.H.			1	1				
7	2	198366-14700	WHEEL ASSY,5JAX16WDC			1	1				
7-1	2	198366-14701	WHEEL ASSY, 5JAX16			1	1			R	
			(C=F072009) (D=F061827)								
8	2	194328-14810	TIRE ASSY, FRONT			1	1				
9	3	194328-14820	TIRE, 8-16 4 FSLM			1	1				
10	3	194328-14830	TUBE			1	1				

Remarks
* Applied to the following models.
EG330L, EG334L, EG334SL

N:Old $\overset{\text{Yes}}{\underset{\text{No}}{\leftrightarrow}}$ New, Q:Old $\overset{\text{No}}{\underset{\text{Yes}}{\leftrightarrow}}$ New, R:Old $\overset{\text{Yes}}{\underset{\text{Yes}}{\leftrightarrow}}$ New, S:Old $\overset{\text{No}}{\underset{\text{No}}{\leftrightarrow}}$ New, W:Add, Z:Discontinued, F:Interchangeable by set, K:Q'ty Change

Copyright (C) 2014 YANMAR CO., LTD. All RightsReserved.

Fig.281. FRONT WHEEL TIRE

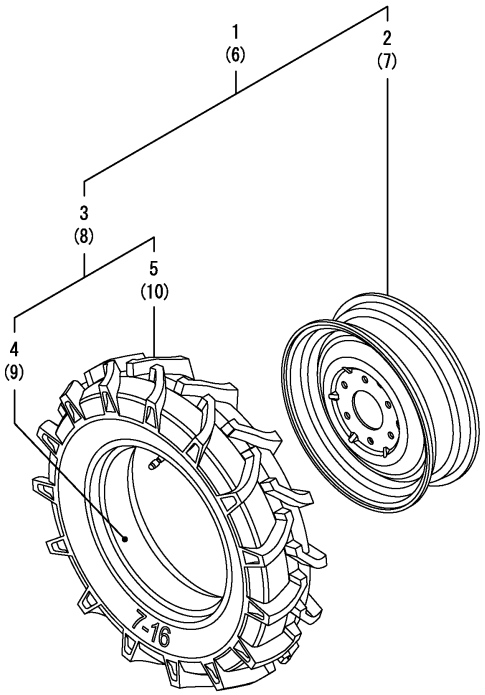

(A)=EG326Y (B)=EG328Y (C)=EG330Y (D)=EG334Y (E)= (F)=

No.	Lev.	Parts No.	Description	Q'ty (A)	(B)	(C)	(D)	(E)	(F)	I	R
1	1	794416-14700-1	TIRE KIT, FRONT L				1				
1-1	1	1A7170-14700	TIRE KIT, 7-16 L (D=F061384)				1				R
2	2	194279-14700-1	WHEEL ASSY,5JAX16WDC				1				
2-1	2	1A7140-14760	WHEEL ASSY, 5JA X 16 (D=F061384)				1				R
3	2	194321-14850	TIRE ASSY, FRONT				1				
4	3	194321-14820	TUBE				1				
5	3	194321-14860	TIRE, 7-16 4 FSLM				1				
6	1	794416-14800-1	TIRE KIT, FRONT R				1				
6-1	1	1A7170-14800	TIRE KIT, 7-16 R (D=F061384)				1				R
7	2	194279-14700-1	WHEEL ASSY,5JAX16WDC				1				
7-1	2	1A7140-14760	WHEEL ASSY, 5JA X 16 (D=F061384)				1				R
8	2	194321-14850	TIRE ASSY, FRONT				1				
9	3	194321-14820	TUBE				1				
10	3	194321-14860	TIRE, 7-16 4 FSLM				1				

Remarks
* Applied to the following models.
EG334KWA

N:Old $\xleftrightarrow[\text{No}]{\text{Yes}}$ New, Q:Old $\xleftrightarrow[\text{Yes}]{\text{No}}$ New, R:Old $\xleftrightarrow[\text{Yes}]{\text{Yes}}$ New, S:Old $\xleftrightarrow[\text{No}]{\text{No}}$ New, W:Add, Z:Discontinued, F:Interchangeable by set, K:Q'ty Change

Copyright (C) 2014 YANMAR CO., LTD. All RightsReserved.

Fig.30. HUB BOLT

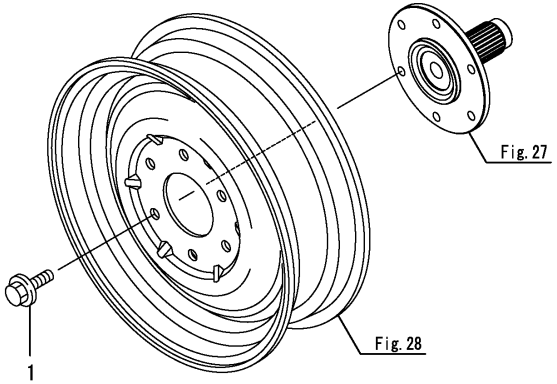

(A)=EG326Y (B)=EG328Y (C)=EG330Y (D)=EG334Y (E)= (F)=

No.	Lev.	Parts No.	Description	Q'ty (A)	(B)	(C)	(D)	(E)	(F)	I	R
1	1	198133-34130	BOLT, M14X30	12	12	12	12				

N:Old $\xleftarrow[\text{No}]{\text{Yes}}$ New, Q:Old $\xleftarrow[\text{Yes}]{\text{No}}$ New, R:Old $\xleftarrow[\text{Yes}]{\text{Yes}}$ New, S:Old $\xleftarrow[\text{No}]{\text{No}}$ New, W:Add, Z:Discontinued, F:Interchangeable by set, K:Q'ty Change

Copyright (C) 2014 YANMAR CO., LTD. All RightsReserved.

Fig.31. STEERING COLUMN

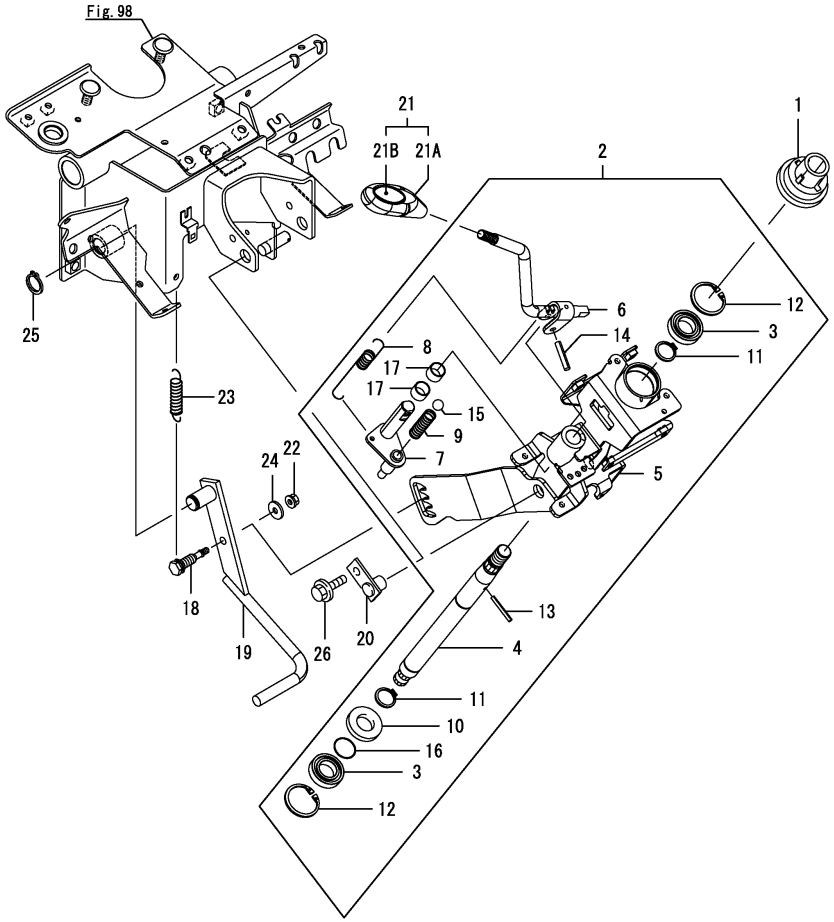

(A)=EG326Y (B)=EG328Y (C)=EG330Y (D)=EG334Y (E)= (F)=

No.	Lev.	Parts No.	Description	Q'ty (A)	(B)	(C)	(D)	(E)	(F)	I	R
1	1	1A7180-15410	CAM, CANCEL	1	1	1	1				
2	1	1A7180-15501	COLUMN, STEERING	1	1	1	1				
2-1	1	1A7180-15502	COLUMN ASSY,STEERING	1	1	1	1			N	
	(A=F100156)	(B=F200141)	(C=F300575) (D=F400655)								
3	2	198146-15240	BEARING, 6904LLU	2	2	2	2				
4	2	1A7180-15321	SHAFT, STEERING	1	1	1	1				
5	2	1A7180-15601	COLUMN ASSY,STEERING	1	1	1	1				
5-1	2	1A7180-15602	COLUMN ASSY,STEERING	1	1	1	1			N	
	(A=F100156)	(B=F200141)	(C=F300575) (D=F400655)								
6	2	1A7180-18110	LEVER, REVERSER	1	1	1	1				
7	2	1A7180-18210	SHAFT, REVERSER	1	1	1	1				
8	2	1A7180-18250	SPRING, RETURN	1	1	1	1				
9	2	1A7610-18380	SPRING, 23	1	1	1	1				
10	2	22117-200000	WASHER, 20	1	1	1	1				
11	2	22242-000200	RING, 20	2	2	2	2				
12	2	22252-000370	RING, 37	2	2	2	2				
13	2	22351-040032	PIN, SPRING 4.0X32	1	1	1	1				
14	2	22351-060032	PIN, SPRING 6.0X32	1	1	1	1				
15	2	24190-110001	BALL, STEEL 11/32	1	1	1	1				
16	2	24315-000200	O-RING, 1BP20.0	1	1	1	1				
17	2	24550-015120	BUSH, 15X12	2	2	2	2				
18	1	1A7180-15710	PIN, TILT LOCK	1	1	1	1				
19	1	1A7180-15750	PEDAL ASSY, TILT	1	1	1	1				
20	1	198072-15810	PIN ASSY, TILT	2	2	2	2				
21	1	198200-18350	KNOB, LEVER	1	1	1	1				
21A	2	198273-18360	KNOB, ORANGE	1	1	1	1				
21B	2	198200-18370	LABEL,	1	1	1	1				
22	1	194990-22130	NUT, M6	1	1	1	1				
23	1	198290-37510	SPRING, RETURN	1	1	1	1				
24	1	22157-060000	WASHER, 6	1	1	1	1				
25	1	22242-000170	RING, 17	1	1	1	1				
26	1	26106-080122	BOLT, M8X 12 PLATED	2	2	2	2				

Remarks
* Applied to the following models.
EG326, EG328, EG330, EG334
EG330A (Cabin specification), EG334A (Cabin specification)

N:Old $\xleftarrow[\text{No}]{\text{Yes}}$ New, Q:Old $\xleftarrow[\text{Yes}]{\text{No}}$ New, R:Old $\xleftarrow[\text{Yes}]{\text{Yes}}$ New, S:Old $\xleftarrow[\text{No}]{\text{No}}$ New, W:Add, Z:Discontinued, F:Interchangeable by set, K:Q'ty Change

Copyright (C) 2014 YANMAR CO., LTD. All RightsReserved.

Fig.230. STEERING COLUMN(A,K,KW,KWA)

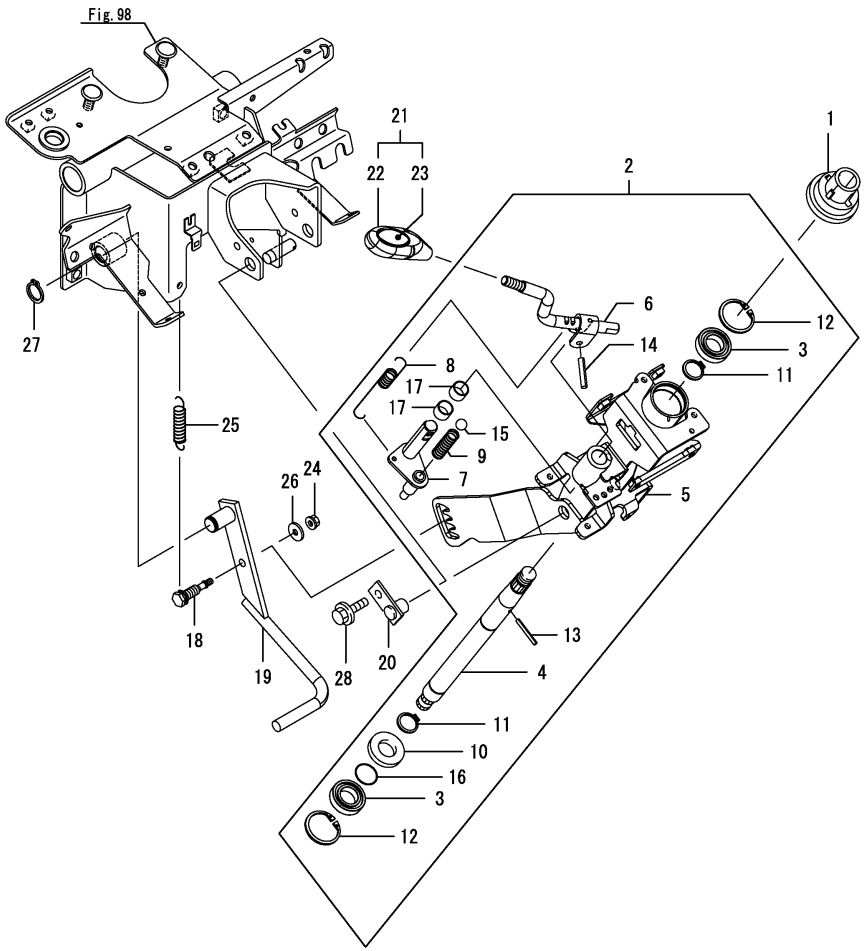

(A)=EG326Y (D)=EG334Y
(B)=EG328Y (E)=
(C)=EG330Y (F)=

No.	Lev.	Parts No.	Description	Q'ty (A)	(B)	(C)	(D)	(E)	(F)	I	R
1	1	1A7180-15410	CAM, CANCEL			1	1				
2	1	1A7160-15500	COLUMN UNIT,			1	1				
2-1	1	1A7160-15501	COLUMN UNIT,			1	1			N	
			(C=F300575) (D=F400655)								
3	2	198146-15240	BEARING, 6904LLU			2	2				
4	2	1A7160-15320	SHAFT, STEERING			1	1				
5	2	1A7180-15601	COLUMN ASSY,STEERING			1	1				
5-1	2	1A7180-15602	COLUMN ASSY,STEERING			1	1			N	
			(C=F300575) (D=F400655)								
6	2	1A7160-18110	LEVER, REVERSER			1	1				
7	2	1A7180-18210	SHAFT, REVERSER			1	1				
8	2	1A7180-18250	SPRING, RETURN			1	1				
9	2	1A7610-18380	SPRING, 23			1	1				
10	2	22117-200000	WASHER, 20			1	1				
11	2	22242-000200	RING, 20			2	2				
12	2	22252-000370	RING, 37			2	2				
13	2	22351-040032	PIN, SPRING 4.0X32			1	1				
14	2	22351-060032	PIN, SPRING 6.0X32			1	1				
15	2	24190-110001	BALL, STEEL 11/32			1	1				
16	2	24315-000200	O-RING, 1BP20.0			1	1				
17	2	24550-015120	BUSH, 15X12			2	2				
18	1	1A7180-15710	PIN, TILT LOCK			1	1				
19	1	1A7180-15750	PEDAL ASSY, TILT			1	1				
20	1	198072-15810	PIN ASSY, TILT			2	2				
21	1	198200-18350	KNOB, LEVER			1	1				
22	2	198273-18360	KNOB, ORANGE			1	1				
23	2	198200-18370	LABEL,			1	1				
24	1	194990-22130	NUT, M6			1	1				
25	1	198290-37510	SPRING, RETURN			1	1				
26	1	22157-060000	WASHER, 6			1	1				
27	1	22242-000170	RING, 17			1	1				
28	1	26106-080122	BOLT, M8X 12 PLATED			2	2				

Remarks
* Applied to the following models.
EG330A(Rops specification), EG330K, EG330KW, EG334A(Rops specification), EG334KW, EG334KWA

N:Old $\overset{\text{Yes}}{\underset{\text{No}}{\leftrightarrow}}$ New, Q:Old $\overset{\text{No}}{\underset{\text{Yes}}{\leftrightarrow}}$ New, R:Old $\overset{\text{Yes}}{\underset{\text{Yes}}{\leftrightarrow}}$ New, S:Old $\overset{\text{No}}{\underset{\text{No}}{\leftrightarrow}}$ New, W:Add, Z:Discontinued, F:Interchangeable by set, K:Q'ty Change

Copyright (C) 2014 YANMAR CO., LTD. All RightsReserved.

Fig.32. STEERING SHAFT

(A)=EG326Y
(B)=EG328Y
(C)=EG330Y
(D)=EG334Y
(E)=
(F)=

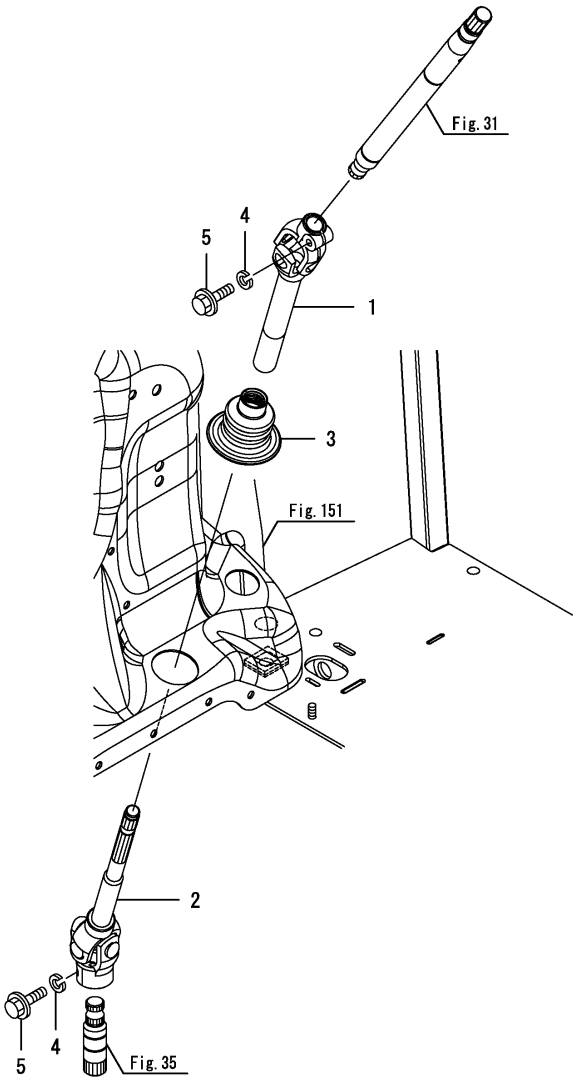

No.	Lev.	Parts No.	Description	Q'ty (A)	(B)	(C)	(D)	(E)	(F)	I	R
1	1	1A7180-15350	SHAFT ASSY, JOINT A	1	1	1	1				
2	1	1A7710-15540	SHAFT ASSY, JOINT B	1	1	1	1				
3	1	1A7180-15690	BOOT, SHAFT	1	1	1	1				
4	1	22217-080000	WASHER, SPRING 8	2	2	2	2				
5	1	26106-080302	BOLT, M8X 30 PLATED	2	2	2	2				

N:Old $\overset{\text{Yes}}{\underset{\text{No}}{\leftrightarrow}}$ New, Q:Old $\overset{\text{No}}{\underset{\text{Yes}}{\leftrightarrow}}$ New, R:Old $\overset{\text{Yes}}{\underset{\text{Yes}}{\leftrightarrow}}$ New, S:Old $\overset{\text{No}}{\underset{\text{No}}{\leftrightarrow}}$ New, W:Add, Z:Discontinued, F:Interchangeable by set, K:Q'ty Change

Copyright (C) 2014 YANMAR CO., LTD. All RightsReserved.

Fig.33. STEERING WHEEL

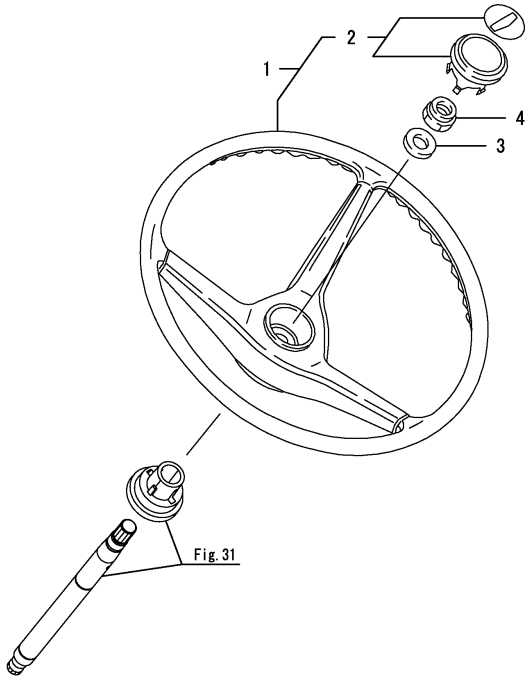

Remarks
* Applied to the following models.
EG326, EG328, EG330, EG334
EG330A (Cabin specification), EG334A (Cabin specification)

(A)=EG326Y (D)=EG334Y
(B)=EG328Y (E)=
(C)=EG330Y (F)=

No.	Lev.	Parts No.	Description	Q'ty (A)	(B)	(C)	(D)	(E)	(F)	I	R
1	1	198448-15700	WHEEL ASSY, STEERING	1	1	1	1				
2	2	198071-15720	CAP ASSY	1	1	1	1				
3	1	22137-160000	WASHER, 16	1	1	1	1				
4	1	26356-160002	NUT, M16	1	1	1	1				

N:Old $\xleftrightarrow[\text{No}]{\text{Yes}}$ New, Q:Old $\xleftrightarrow[\text{Yes}]{\text{No}}$ New, R:Old $\xleftrightarrow[\text{Yes}]{\text{Yes}}$ New, S:Old $\xleftrightarrow[\text{No}]{\text{No}}$ New, W:Add, Z:Discontinued, F:Interchangeable by set, K:Q'ty Change

Copyright (C) 2014 YANMAR CO., LTD. All RightsReserved.

Fig.231. STEERING WHEEL(A,K,KW,KWA)

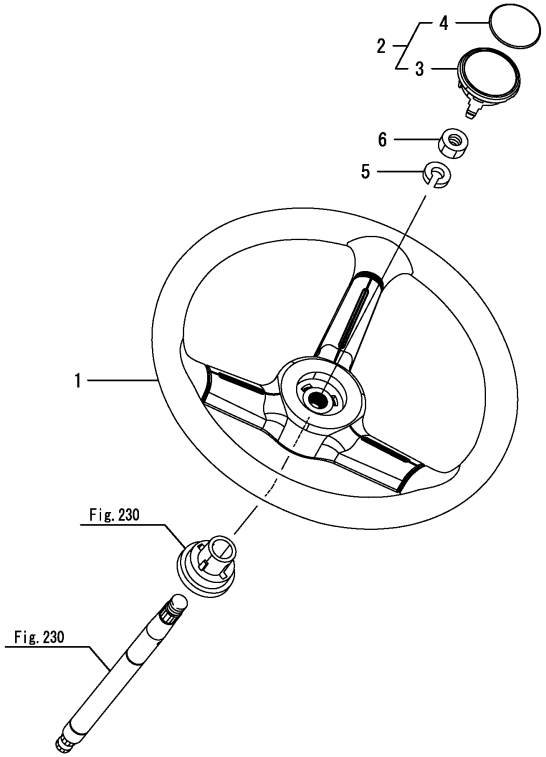

(A)=EG326Y (D)=EG334Y
(B)=EG328Y (E)=
(C)=EG330Y (F)=

No.	Lev.	Parts No.	Description	Q'ty (A)	(B)	(C)	(D)	(E)	(F)	I	R
1	1	1C7121-42000	WHEEL, STEERING			1	1				
2	1	1C7121-42050	CAP, STEERING WHEEL			1	1				
3	2	198220-15770	CAP, WHEEL			1	1				
4	2	198164-15780	MARK,STEERING			1	1				
5	1	22217-160000	WASHER, SPRING 16			1	1				
6	1	26776-160002	NUT, LOCK M16			1	1				

Remarks
* Applied to the following models.
EG330A(Rops specification), EG330K, EG330KW, EG334A(Rops specification), EG334KW, EG334KWA

N:Old $\xleftrightarrow[\text{No}]{\text{Yes}}$ New, Q:Old $\xleftrightarrow[\text{Yes}]{\text{No}}$ New, R:Old $\xleftrightarrow[\text{Yes}]{\text{Yes}}$ New, S:Old $\xleftrightarrow[\text{No}]{\text{No}}$ New, W:Add, Z:Discontinued, F:Interchangeable by set, K:Q'ty Change

Copyright (C) 2014 YANMAR CO., LTD. All RightsReserved.

Fig.34. P.S.T. CYLINDER

(A)=EG326Y
(B)=EG328Y
(C)=EG330Y
(D)=EG334Y
(E)=
(F)=

No.	Lev.	Parts No.	Description	Q'ty (A)	(B)	(C)	(D)	(E)	(F)	I	R
1	1	198220-11520	BOLT, M12X38	2	2	2	2				
2	1	198240-11640	BOLT, M12X46	2	2	2	2				
3	1	1A7140-17100	CYLINDER ASSY	1	1	1	1				
4	2	1A7140-17260	BUSH, 35X39X15	2	2	2	2				
5	2	1A7140-17310	CAP, CYLINDER L	1	1	1	1				
6	2	1A7140-17320	CAP, CYLINDER R	1	1	1	1				
7	2	1A7140-17330	GASKET, 35	2	2	2	2				
8	2	1A7180-17350	TUBE, CYLINDER	1	1	1	1				
9	2	1A7140-17400	ROD ASSY, CYLINDER	1	1	1	1				
10	3	22242-000350	RING, 35	2	2	2	2				
11	2	1A7140-17430	SCRAPER, 35	2	2	2	2				
12	2	198072-17440	O-RING, 55.0	2	2	2	2				
13	2	198071-17481	RING, BACK UP 50	2	2	2	2				
14	2	1A7900-17840	ELBOW, 105	2	2	2	2				
15	2	172157-72710	PACKING 50,HSD	1	1	1	1				
16	2	22312-100200	PIN, PARALLEL M10X20	2	2	2	2				

N:Old $\xleftrightarrow[\text{No}]{\text{Yes}}$ New, Q:Old $\xleftrightarrow[\text{Yes}]{\text{No}}$ New, R:Old $\xleftrightarrow[\text{Yes}]{\text{Yes}}$ New, S:Old $\xleftrightarrow[\text{No}]{\text{No}}$ New, W:Add, Z:Discontinued, F:Interchangeable by set, K:Q'ty Change

Copyright (C) 2014 YANMAR CO., LTD. All RightsReserved.

Fig.35. P.S.T. VALVE

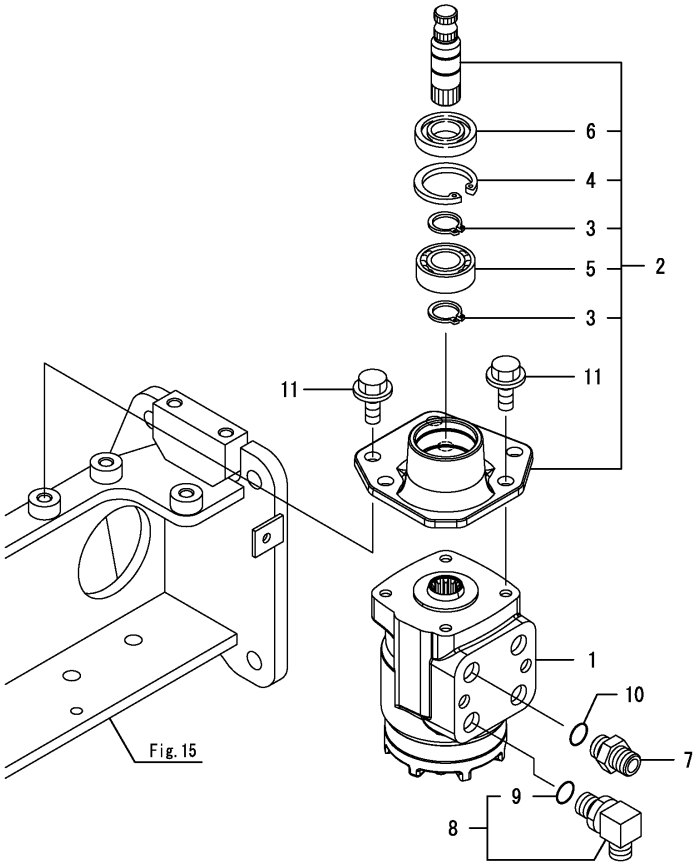

(A)=EG326Y (D)=EG334Y
(B)=EG328Y (E)=
(C)=EG330Y (F)=

No.	Lev.	Parts No.	Description	Q'ty (A)	(B)	(C)	(D)	(E)	(F)	I	R
1	1	1A7180-17500	VALVE ASSY, STEERING	1	1	1	1				
2	1	1A7180-17601	BRACKET ASSY, VALVE	1	1	1	1				
2-1	1	1A7180-17602	BRACKET ASSY, VALVE	1	1	1	1			N	
	(A=F100008)	(B=F200001)	(C=F300001) (D=F400004)								
3	2	22242-000200	RING, 20	2	2	2	2				
4	2	22252-000420	RING, 42	1	1	1	1				
5	2	24104-060040	BEARING, 6004UUC3	1	1	1	1				
6	2	24430-204206	SEAL, OIL VC204206	1	1	1	1				
7	1	172730-75141	ADAPTER	1	1	1	1				
8	1	172142-76181	JOINT ASSY	1	1	1	1				
9	2	24315-000140	O-RING, 1BP14.0	1	1	1	1				
10	1	24311-000140	O-RING, 1AP14.0	1	1	1	1				
11	1	26106-100202	BOLT, M10X 20 PLATED	6	6	6	6				

N:Old $\overset{\text{Yes}}{\underset{\text{No}}{\leftrightarrows}}$ New, Q:Old $\overset{\text{No}}{\underset{\text{Yes}}{\leftrightarrows}}$ New, R:Old $\overset{\text{Yes}}{\underset{\text{Yes}}{\leftrightarrows}}$ New, S:Old $\overset{\text{No}}{\underset{\text{No}}{\leftrightarrows}}$ New, W:Add, Z:Discontinued, F:Interchangeable by set, K:Q'ty Change

Copyright (C) 2014 YANMAR CO., LTD. All RightsReserved.

Fig.36. P.S.T. HOSE

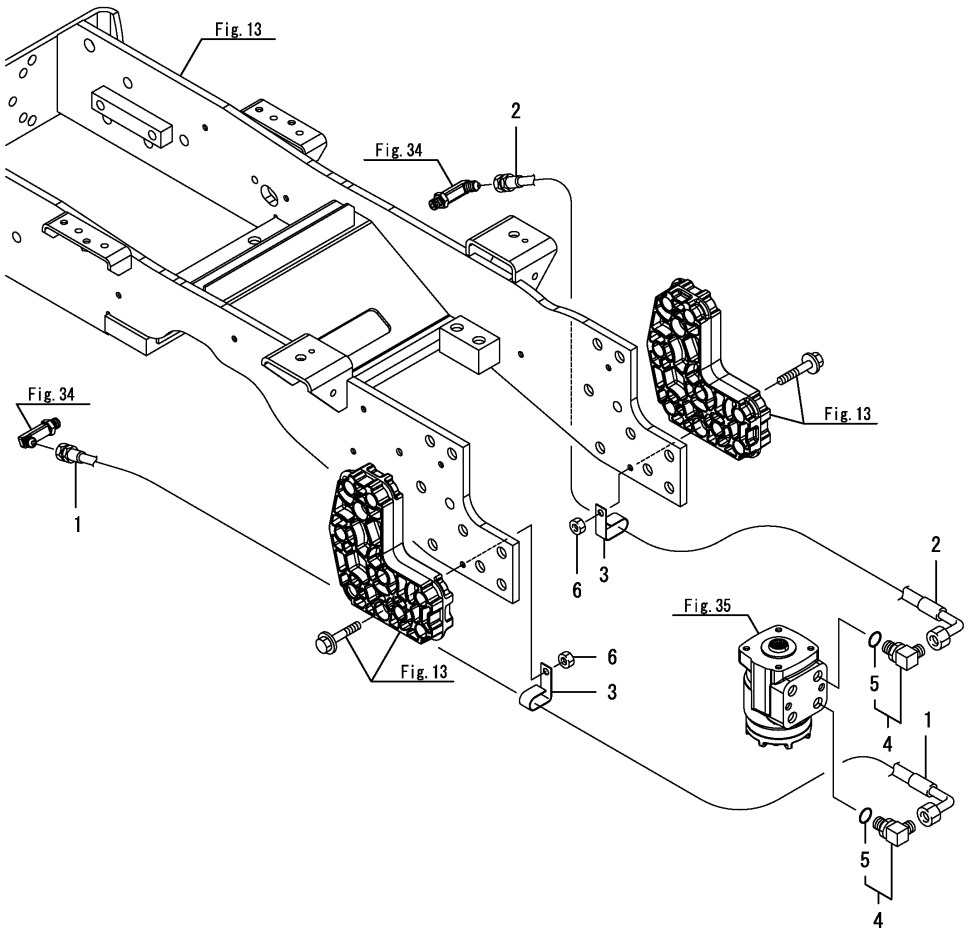

(A)=EG326Y (D)=EG334Y
(B)=EG328Y (E)=
(C)=EG330Y (F)=

No.	Lev.	Parts No.	Description	Q'ty (A)	(B)	(C)	(D)	(E)	(F)	I	R
1	1	1A7140-17850	HOSE, STEERING	1	1	1	1				
1-1	1	1A7210-17860	HOSE, STEERING	1	1	1	1			N	
	(A=F090405)	(B=F080327)	(C=F070825) (D=F060757)								
2	1	1A7140-17860	HOSE, STEERING	1	1	1	1				
3	1	198082-17880	CLAMP, HOSE	2	2	2	2				
4	1	172141-76920	CONNECTOR ASSY	2	2	2	2				
5	2	24315-000140	O-RING, 1BP14.0	2	2	2	2				
6	1	26716-080002	NUT, M8	2	2	2	2				

N:Old $\frac{\text{Yes}}{\text{No}}$ New, Q:Old $\frac{\text{No}}{\text{Yes}}$ New, R:Old $\frac{\text{Yes}}{\text{Yes}}$ New, S:Old $\frac{\text{No}}{\text{No}}$ New, W:Add, Z:Discontinued, F:Interchangeable by set, K:Q'ty Change

Copyright (C) 2014 YANMAR CO., LTD. All RightsReserved.

Fig.280. WEIGHT LOCK PIN(KWA)

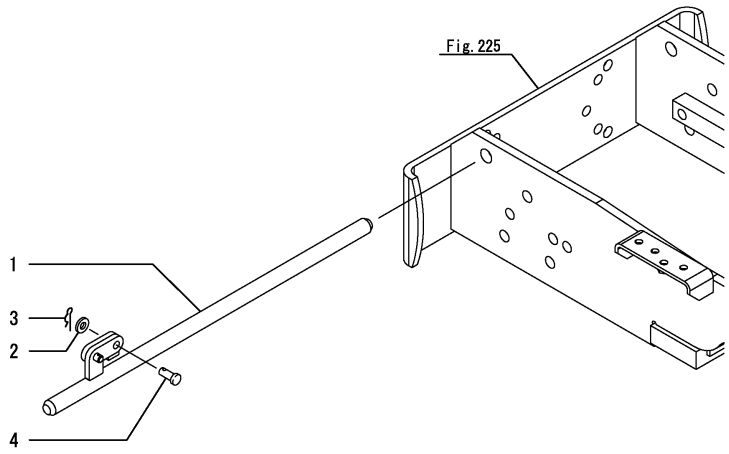

(A)=EG326Y (D)=EG334Y
(B)=EG328Y (E)=
(C)=EG330Y (F)=

No.	Lev.	Parts No.	Description	Q'ty (A)	(B)	(C)	(D)	(E)	(F)	I	R
1	1	1A7180-11050	PIN ASSY, LOCK				1				
2	1	22137-080000	WASHER, 8				1				
3	1	22372-080000	PIN, SNAP 8				1				
4	1	22487-080160	PIN, H 8X 16				1				

Remarks
* Applied to the following models.
EG334KWA

N:Old $\xleftrightarrow[\text{No}]{\text{Yes}}$ New, Q:Old $\xleftrightarrow[\text{Yes}]{\text{No}}$ New, R:Old $\xleftrightarrow[\text{Yes}]{\text{Yes}}$ New, S:Old $\xleftrightarrow[\text{No}]{\text{No}}$ New, W:Add, Z:Discontinued, F:Interchangeable by set, K:Q'ty Change

Copyright (C) 2014 YANMAR CO., LTD. All RightsReserved.

Fig.37. DRIVE SHAFT

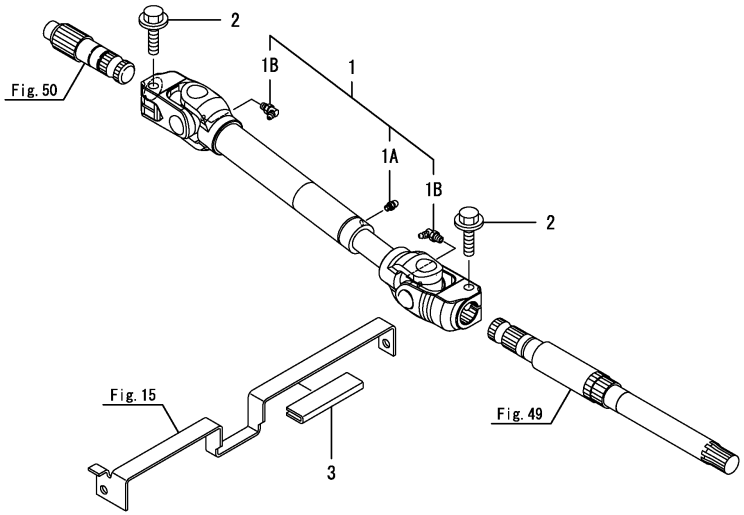

(A)=EG326Y (D)=EG334Y
(B)=EG328Y (E)=
(C)=EG330Y (F)=

No.	Lev.	Parts No.	Description	Q'ty (A)	(B)	(C)	(D)	(E)	(F)	I	R
1	1	1A7180-21140	SHAFT, DRIVE	1	1	1	1				
1-1	1	1A7180-21141	SHAFT, DRIVE	1	1	1	1			N	
	(A=F100001)	(B=F200001)	(C=F300001) (D=F400001)								
1-2	1	1A7180-21142	SHAFT, DRIVE	1	1	1	1			N	
	(A=F100123)	(B=F200109)	(C=F300428) (D=F400472)								
1A	2	1A7180-21260	NIPPLE, M6F X0.75	1	1	1	1				
1B	2	24761-040000	NIPPLE, GREASE B	2	2	2	2				
2	1	26106-100402	BOLT, M10X 40 PLATED	2	2	2	2				
3	1	198230-61560	GUIDE, HOSE	1	1	1	1			W	
	(A=F100083)	(B=F200066)	(C=F300240) (D=F400238)								

Remarks
* Applied to the following models.
EG326, EG328, EG330, EG334
EG330A (Cabin specification), EG334A (Cabin specification)

N:Old $\overset{\text{Yes}}{\underset{\text{No}}{\leftrightarrows}}$ New, Q:Old $\overset{\text{No}}{\underset{\text{Yes}}{\leftrightarrows}}$ New, R:Old $\overset{\text{Yes}}{\underset{\text{Yes}}{\leftrightarrows}}$ New, S:Old $\overset{\text{No}}{\underset{\text{No}}{\leftrightarrows}}$ New, W:Add, Z:Discontinued, F:Interchangeable by set, K:Q'ty Change

Copyright (C) 2014 YANMAR CO., LTD. All RightsReserved.

Fig.232. DRIVE SHAFT(A,K,KW,KWA)

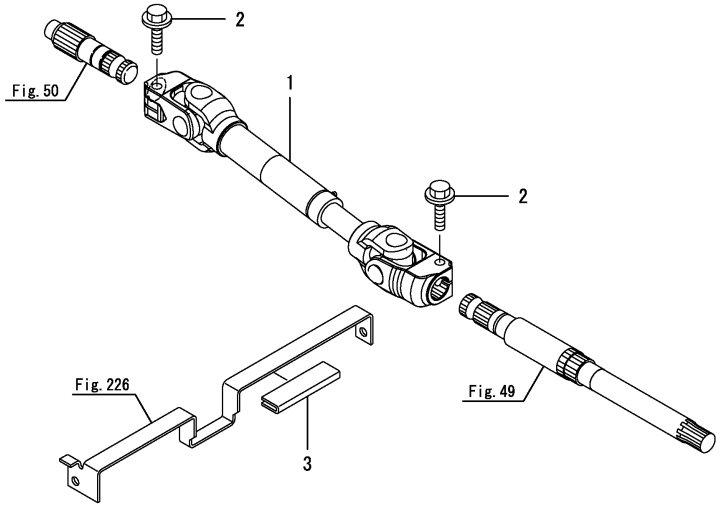

(A)=EG326Y (B)=EG328Y (C)=EG330Y (D)=EG334Y (E)= (F)=

No.	Lev.	Parts No.	Description	Q'ty (A)	(B)	(C)	(D)	(E)	(F)	I	R
1	1	1A7160-21140	SHAFT, DRIVE			1	1				
1-1	1	1A7160-21141	SHAFT, DRIVE (C=F300034) (D=F400016)			1	1			N	
1-2	1	1A7160-21142	SHAFT, DRIVE (C=F300428) (D=F400472)			1	1			N	
2	1	26106-100402	BOLT, M10X 40 PLATED			2	2				
3	1	198230-61560	GUIDE, HOSE (C=F300240) (D=F400238)			1	1			W	

Remarks
* Applied to the following models.
EG330A(Rops specification), EG330K, EG330KW, EG334A(Rops specification), EG334KW, EG334KWA

N:Old ◄Yes/No► New, Q:Old ◄No/Yes► New, R:Old ◄Yes/Yes► New, S:Old ◄No/No► New, W:Add, Z:Discontinued, F:Interchangeable by set, K:Q'ty Change

Copyright (C) 2014 YANMAR CO., LTD. All RightsReserved.

Fig.38. DAMPER DISC

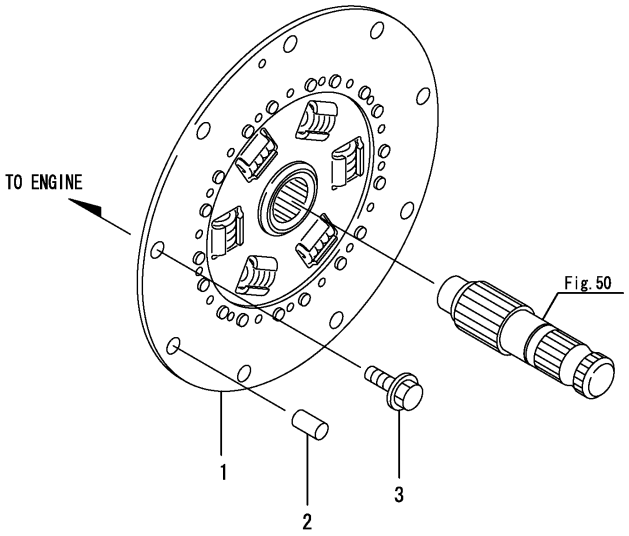

(A)=EG326Y (D)=EG334Y
(B)=EG328Y (E)=
(C)=EG330Y (F)=

No.	Lev.	Parts No.	Description	Q'ty (A)	(B)	(C)	(D)	(E)	(F)	I	R
1	1	198479-22350	DISK, DAMPER	1	1	1	1				
2	1	22312-100180	PIN, PARALLEL M10X18	3	3	3	3				
3	1	26106-080252	BOLT, M8X 25 PLATED	6	6	6	6				

N:Old $\xleftarrow[\text{No}]{\text{Yes}}$ New, Q:Old $\xleftarrow[\text{Yes}]{\text{No}}$ New, R:Old $\xleftarrow[\text{Yes}]{\text{Yes}}$ New, S:Old $\xleftarrow[\text{No}]{\text{No}}$ New, W:Add, Z:Discontinued, F:Interchangeable by set, K:Q'ty Change

Copyright (C) 2014 YANMAR CO., LTD. All RightsReserved.

Fig.39. FLYWHEEL HOUSING

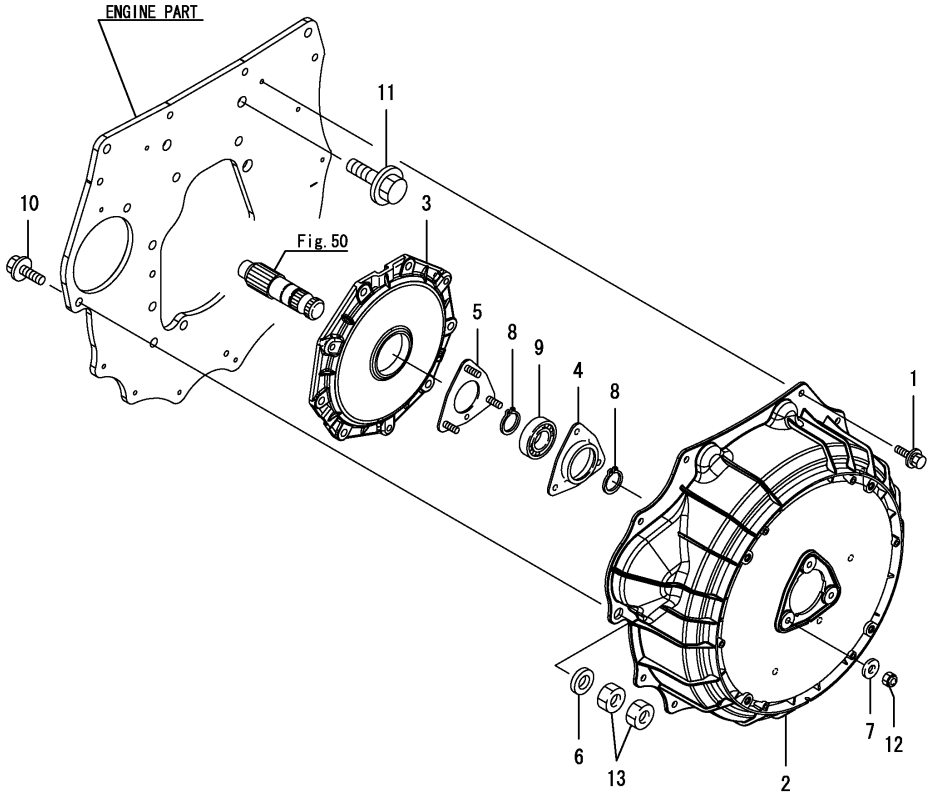

(A)=EG326Y (D)=EG334Y
(B)=EG328Y (E)=
(C)=EG330Y (F)=

No.	Lev.	Parts No.	Description	Q'ty (A)	(B)	(C)	(D)	(E)	(F)	I	R
1	1	26106-060162	BOLT, M6X 16 PLATED	11	11	11	11				
1-1	1	194420-05210	BOLT, M6X16	11	11	11	11			N	
	(A=F090101)	(B=F080101)	(C=F070101) (D=F060101)								
2	1	1A7180-21112	COVER, FLYWHEEL	1	1	1	1				
3	1	1A7180-21130	FLANGE	1	1	1	1				
4	1	1A7180-21150	HOLDER, BB A	1	1	1	1				
5	1	1A7180-21161	HOLDER ASSY, BB B	1	1	1	1				
6	1	22137-120000	WASHER, 12	1	1	1	1				
7	1	22157-060000	WASHER, 6	3	3	3	3				
8	1	22242-000250	RING, 25	2	2	2	2				
9	1	24104-060054	BEARING, BALL 6005UU	1	1	1	1				
10	1	26106-080122	BOLT, M8X 12 PLATED	1	1	1	1				
11	1	26106-120252	BOLT, M12X 25 PLATED	2	2	2	2				
12	1	26346-060002	NUT, M6	3	3	3	3				
13	1	26717-120002	NUT, M12	2	2	2	2				

N:Old $\xleftarrow[\text{No}]{\text{Yes}}$ New, Q:Old $\xleftarrow[\text{Yes}]{\text{No}}$ New, R:Old $\xleftarrow[\text{Yes}]{\text{Yes}}$ New, S:Old $\xleftarrow[\text{No}]{\text{No}}$ New, W:Add, Z:Discontinued, F:Interchangeable by set, K:Q'ty Change

Copyright (C) 2014 YANMAR CO., LTD. All RightsReserved.

Fig.40. FLYWHEEL HOUSING(CABIN)

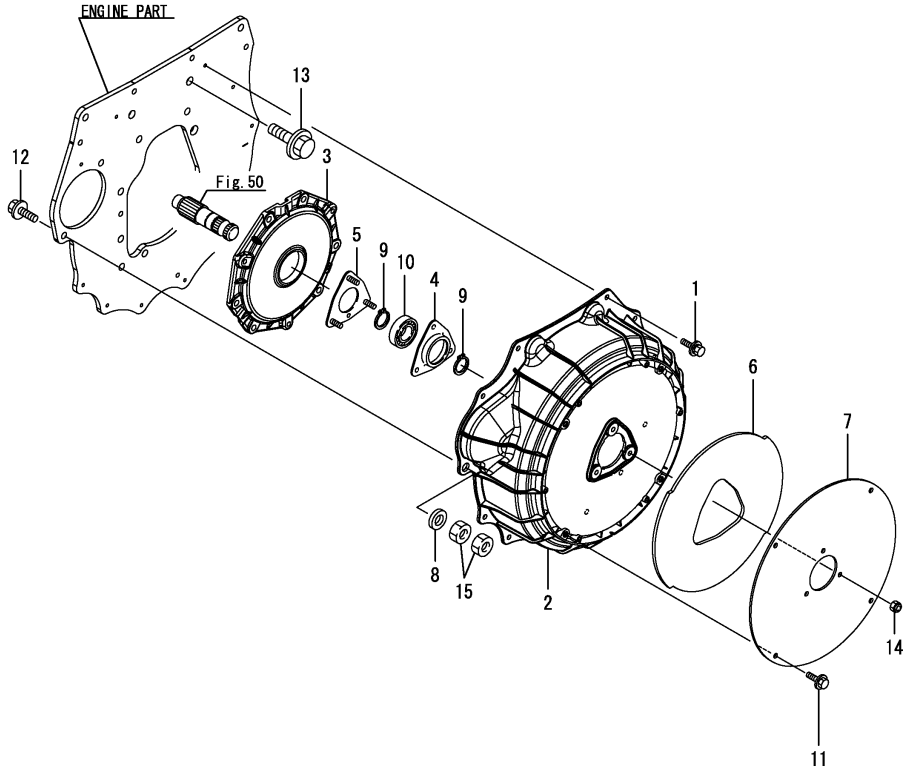

(A)=EG326Y (D)=EG334Y
(B)=EG328Y (E)=
(C)=EG330Y (F)=

No.	Lev.	Parts No.	Description	Q'ty (A)	(B)	(C)	(D)	(E)	(F)	I	R
1	1	26106-060162	BOLT, M6X 16 PLATED	11	11	11	11				
1-1	1	194420-05210	BOLT, M6X16	11	11	11	11			N	
	(A=F090101)	(B=F080101)	(C=F070101) (D=F060101)								
2	1	1A7180-21112	COVER, FLYWHEEL	1	1	1	1				
3	1	1A7180-21130	FLANGE	1	1	1	1				
4	1	1A7180-21150	HOLDER, BB A	1	1	1	1				
5	1	1A7180-21161	HOLDER ASSY, BB B	1	1	1	1				
6	1	1A7210-21301	MATERIAL, DAMPING	1	1	1	1				
7	1	1A7210-21311	PLATE	1	1	1	1				
8	1	22137-120000	WASHER, 12	1	1	1	1				
9	1	22242-000250	RING, 25	2	2	2	2				
10	1	24104-060054	BEARING, BALL 6005UU	1	1	1	1				
11	1	26106-060122	BOLT, M6X 12 PLATED	4	4	4	4				
12	1	26106-080122	BOLT, M8X 12 PLATED	1	1	1	1				
13	1	26106-120252	BOLT, M12X 25 PLATED	2	2	2	2				
14	1	26346-060002	NUT, M6	3	3	3	3				
15	1	26717-120002	NUT, M12	2	2	2	2				

Remarks
Refer to Fig.39 for this figure for abolition.

N:Old $\frac{\text{Yes}}{\text{No}}$ New, Q:Old $\frac{\text{No}}{\text{Yes}}$ New, R:Old $\frac{\text{Yes}}{\text{Yes}}$ New, S:Old $\frac{\text{No}}{\text{No}}$ New, W:Add, Z:Discontinued, F:Interchangeable by set, K:Q'ty Change

Copyright (C) 2014 YANMAR CO., LTD. All RightsReserved.

Fig.41. FRONT COVER

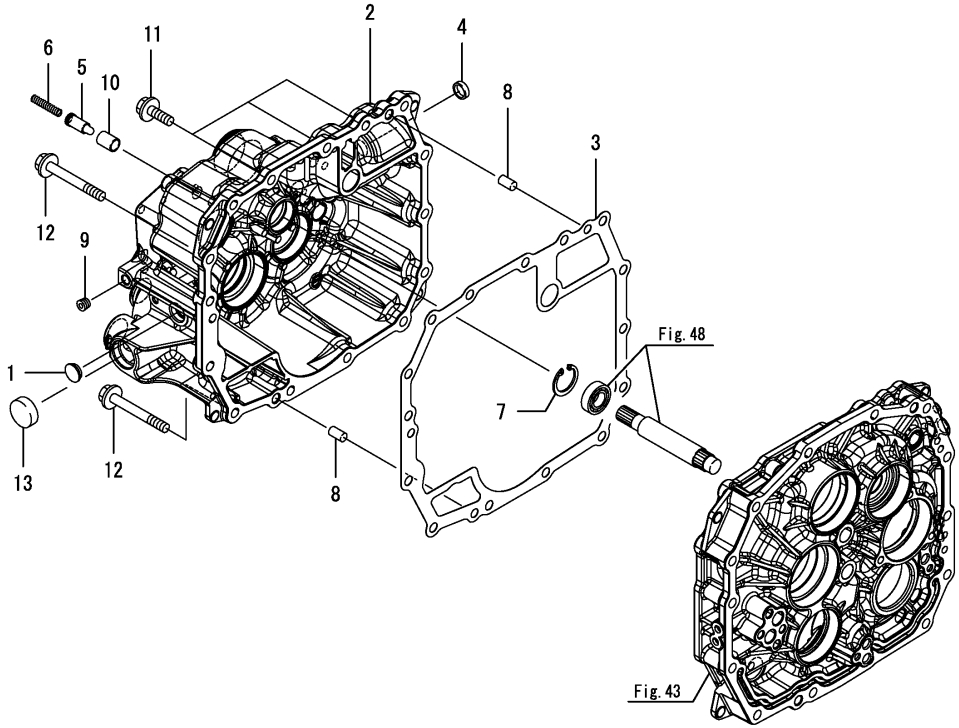

(A)=EG326Y (D)=EG334Y
(B)=EG328Y (E)=
(C)=EG330Y (F)=

No.	Lev.	Parts No.	Description	Q'ty (A)	(B)	(C)	(D)	(E)	(F)	I	R
1	1	1A7450-24170	PLUG, BORE 17	1	1	1	1				
2	1	1A7180-24200	COVER, I-HMT FRONT	1	1	1	1				
3	1	1A7180-24230	GASKET, FRONT COVER	1	1	1	1				
4	1	198282-24330	PLUG, BORE 19	1	1	1	1				
5	1	1A7180-26270	PIN, ANCHOR	1	1	1	1				
6	1	198212-26330	SPRING, ANCHOR PIN	1	1	1	1				
7	1	22252-000350	RING, 35	1	1	1	1				
8	1	22312-100180	PIN, PARALLEL M10X18	2	2	2	2				
9	1	23871-010000	PLUG, R01	1	1	1	1				
10	1	24550-012200	BUSH, 12X20	1	1	1	1				
11	1	26106-100302	BOLT, M10X 30 PLATED	3	3	3	3				
12	1	26106-100802	BOLT, M10X 80 PLATED	12	12	12	12				
13	1	27260-320000	PLUG, 32	1	1	1	1				

N:Old $\frac{\text{Yes}}{\text{No}}$ New, Q:Old $\frac{\text{No}}{\text{Yes}}$ New, R:Old $\frac{\text{Yes}}{\text{Yes}}$ New, S:Old $\frac{\text{No}}{\text{No}}$ New, W:Add, Z:Discontinued, F:Interchangeable by set, K:Q'ty Change

Copyright (C) 2014 YANMAR CO., LTD. All RightsReserved.

Fig.42. TRANSMISSION CASE

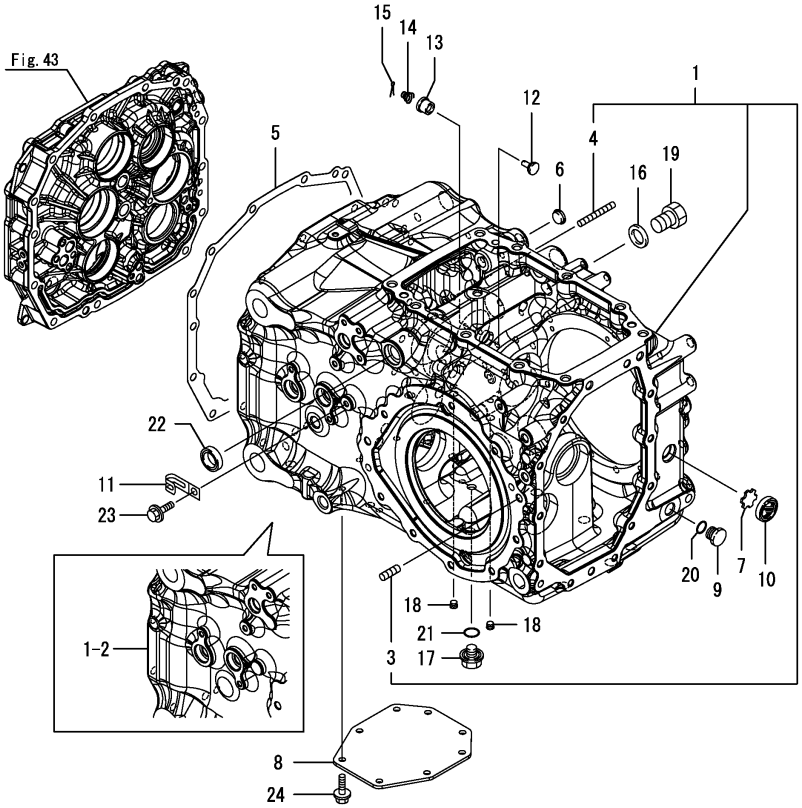

(A)=EG326Y (B)=EG328Y (C)=EG330Y (D)=EG334Y (E)= (F)=

No.	Lev.	Parts No.	Description	Q'ty (A)	(B)	(C)	(D)	(E)	(F)	I	R
1	1	1A7140-24100	HOUSING ASSY	1	1	1	1				
1-1	1	1A7140-24101	HOUSING ASSY, TMNS.	1	1	1	1			F	1
	(A=F090265)	(B=F080242)	(C=F070531)	(D=F060498)							
1-2	1	1A7140-24102	HOUSING ASSY, T/M	1	1	1	1			S	
	(A=F100008)	(B=F200001)	(C=F300001)	(D=F400004)							
3	2	26216-100302	STUD, M10X 30	1	1	1	1				
4	2	26226-080652	STUD, M8X 65	1	1	1	1				
5	1	1A7180-24170	GASKET, MISSION CASE	1	1	1	1				
6	1	1A7450-24170	PLUG, BORE 17	1	1	1	1				
7	1	198071-24350	PLATE, WINDOW	1	1	1	1				
8	1	1A7180-24590	COVER, BOTTOM	1	1	1	1				
9	1	192167-24600	PLUG	1	1	1	1				
10	1	1A1040-28470	WINDOW, OIL CHECK 25	1	1	1	1				
11	1	194440-51620	CLAMP	1	1	1	1			Z	
	(A=F100008)	(B=F200001)	(C=F300001)	(D=F400004)							
12	1	1E6190-55660	VALVE, RELIEF	1	1	1	1				
13	1	1E6190-55710	SEAT, 2ND RELIEF	1	1	1	1				
14	1	1E6480-56410	VALVE,2ND RELIEF	1	1	1	1				
15	1	22417-200100	COTTER PIN 2.0X10	1	1	1	1				
16	1	23414-210000	GASKET, 21X1.0	1	1	1	1			Z	
	(A=F100008)	(B=F200001)	(C=F300001)	(D=F400004)							
17	1	23491-140002	PLUG, 14	1	1	1	1				
18	1	23871-010000	PLUG, R01	2	2	2	2				
19	1	23897-040002	PLUG, G1/2	1	1	1	1			Z	
	(A=F100008)	(B=F200001)	(C=F300001)	(D=F400004)							
20	1	24311-000140	O-RING, 1AP14.0	1	1	1	1				
21	1	24311-000160	O-RING, 1AP16.0	1	1	1	1				
22	1	24421-203007	SEAL, OIL TC203007	2	2	2	2				
23	1	26106-080162	BOLT, M8X 16 PLATED	1	1	1	1			Z	
	(A=F100008)	(B=F200001)	(C=F300001)	(D=F400004)							
24	1	26106-080162	BOLT, M8X 16 PLATED	8	8	8	8				

Remarks
(1)No.1-1 & Fig.125 No.2-2 interchangeable by set.

N:Old $\overset{\text{Yes}}{\underset{\text{No}}{\leftrightarrows}}$ New, Q:Old $\overset{\text{No}}{\underset{\text{Yes}}{\leftrightarrows}}$ New, R:Old $\overset{\text{Yes}}{\underset{\text{Yes}}{\leftrightarrows}}$ New, S:Old $\overset{\text{No}}{\underset{\text{No}}{\leftrightarrows}}$ New, W:Add, Z:Discontinued, F:Interchangeable by set, K:Q'ty Change

Copyright (C) 2014 YANMAR CO., LTD. All RightsReserved.

Fig.43. CENTER PLATE

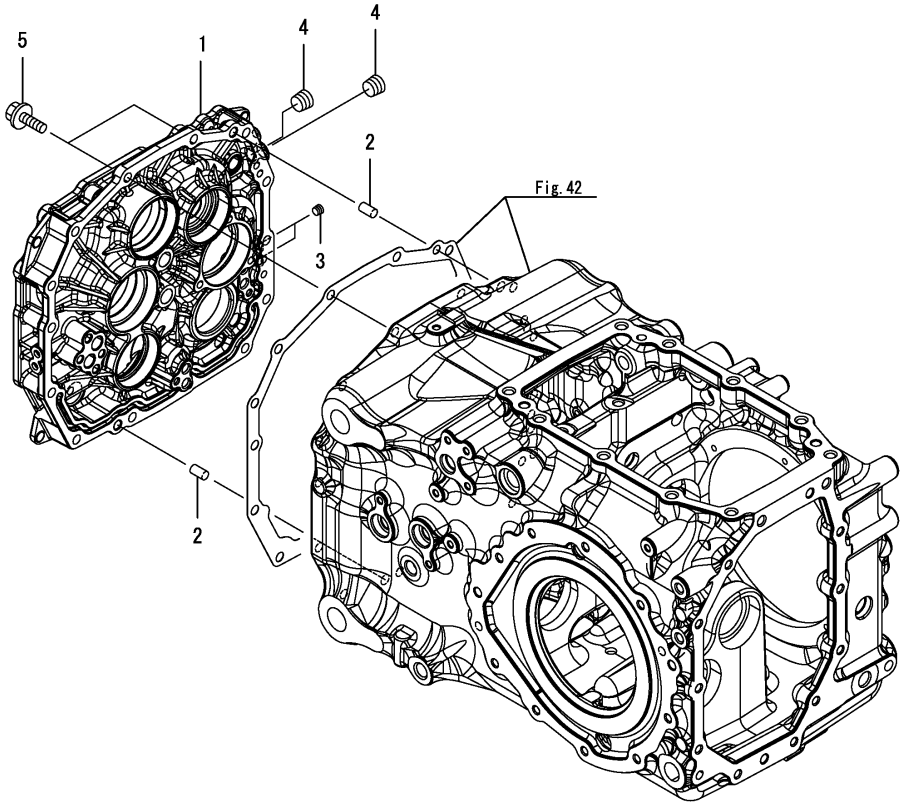

(A)=EG326Y (D)=EG334Y
(B)=EG328Y (E)=
(C)=EG330Y (F)=

No.	Lev.	Parts No.	Description	Q'ty (A)	(B)	(C)	(D)	(E)	(F)	I	R
1	1	1A7180-24310	PLATE ASSY, CENTER	1	1	1	1				
2	1	22312-100180	PIN, PARALLEL M10X18	2	2	2	2				
3	1	23871-010000	PLUG, R01	2	2	2	2				
4	1	23871-020000	PLUG, R02	2	2	2	2				
5	1	26106-100302	BOLT, M10X 30 PLATED	2	2	2	2				

N:Old $\xleftrightarrow[\text{No}]{\text{Yes}}$ New, Q:Old $\xleftrightarrow[\text{Yes}]{\text{No}}$ New, R:Old $\xleftrightarrow[\text{Yes}]{\text{Yes}}$ New, S:Old $\xleftrightarrow[\text{No}]{\text{No}}$ New, W:Add, Z:Discontinued, F:Interchangeable by set, K:Q'ty Change

Copyright (C) 2014 YANMAR CO., LTD. All RightsReserved.

Fig.44. CONTROL VALVE

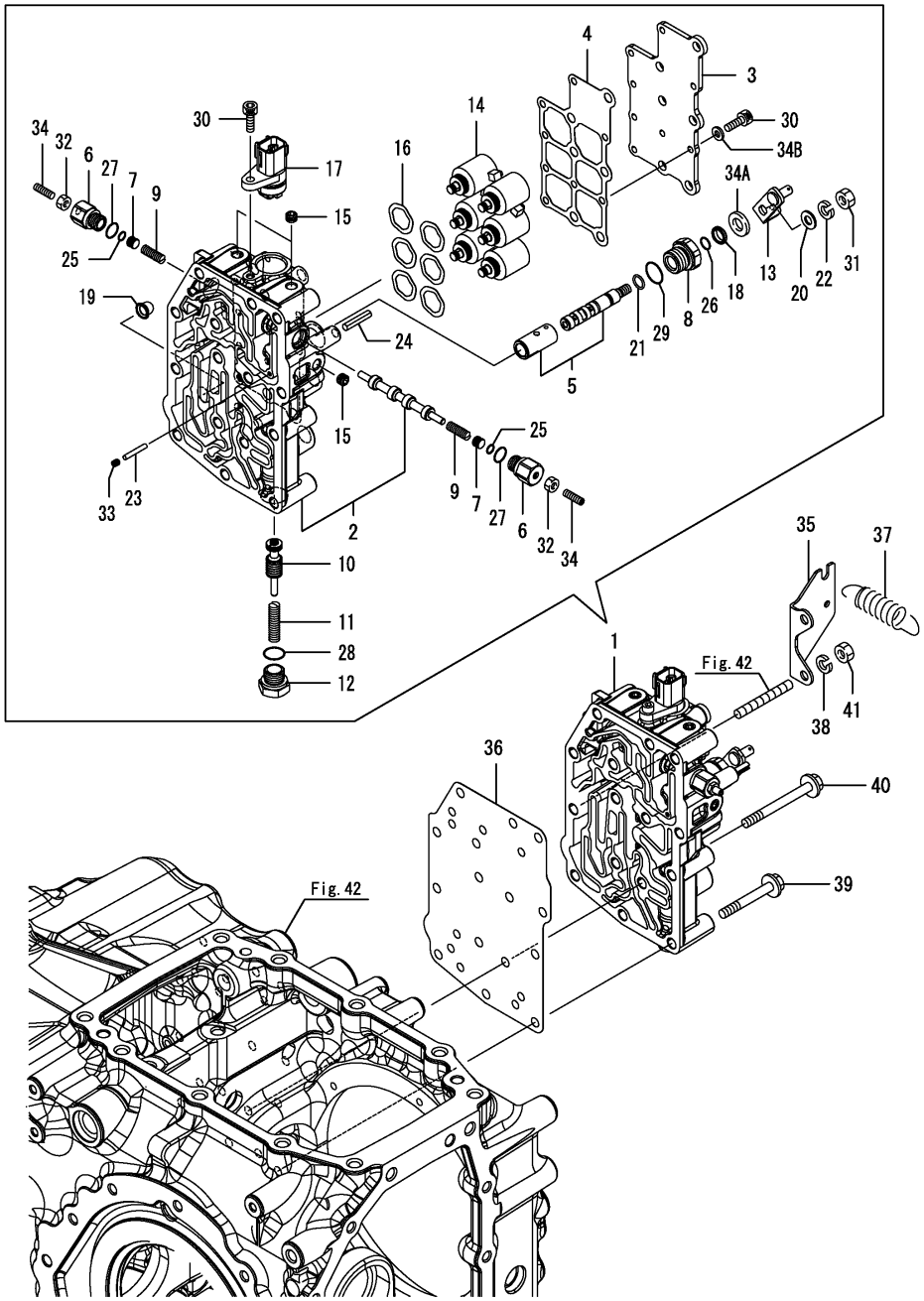

(A)=EG326Y (D)=EG334Y
(B)=EG328Y (E)=
(C)=EG330Y (F)=

No.	Lev.	Parts No.	Description	Q'ty (A)	(B)	(C)	(D)	(E)	(F)	I	R
1	1	168219-00011	CONTOROL VALVE CMP	1	1	1	1				
1-1	1	168219-00012	CONTOROL VALVE CMP	1	1	1	1			N	
	(A=F100126)	(B=F200113)	(C=F300440) (D=F400492)								
2	2	168219-01011	VALVECASE(9A CMP	1	1	1	1				
3	2	168219-01030	COVER(9A	1	1	1	1				
4	2	168219-01040	PK(COVER 9A	1	1	1	1				
5	2	168218-01050	CLUTCH VALVE CMP	1	1	1	1				
5-1	2	168219-01350	CLUTCH VALVE CMP	1	1	1	1			N	
	(A=F100126)	(B=F200113)	(C=F300440) (D=F400492)								
6	2	168219-01060	PLUG(F/R	2	2	2	2				
7	2	168219-01070	PLUG	2	2	2	2				
8	2	168218-01080	PLUG(CLUTCH	1	1	1	1				
8-1	2	168219-01380	PLUG, CLUTCH	1	1	1	1			N	
	(A=F100126)	(B=F200113)	(C=F300440) (D=F400492)								
9	2	168219-01080	SP(PILOT	2	2	2	2				
10	2	168219-01100	RELIEF VALVE	1	1	1	1				
11	2	168219-01110	SP(MAIN RELIEF	1	1	1	1				
12	2	168219-01120	PLUG(RELIEF	1	1	1	1				
13	2	168219-01150	CLUTCH LEVER CMP	1	1	1	1				
14	2	168219-01200	SOLENOID(6 CMP	1	1	1	1				
15	2	178073-01200	PLUG PT 1/8	7	7	7	7				
16	2	168219-01210	WAVE WASHER	6	6	6	6				
17	2	168219-01250	CONNECTOR(SOLENOID 6	1	1	1	1				
18	2	1C6410-22850	SCRAPER, 12	1	1	1	1				
19	2	1A7390-23140	STRAINER	1	1	1	1				
20	2	22137-080000	WASHER, 8	1	1	1	1				
21	2	22207-012160	RING, 12X1.6	1	1	1	1				
22	2	22287-080000	WASHER, 8	1	1	1	1				
23	2	22312-030200	PIN, PARALLEL M3X20	1	1	1	1				
24	2	22351-060030	PIN, SPRING 6.0X30	1	1	1	1				
25	2	24311-000060	O-RING, 1AP6.0	2	2	2	2				
26	2	24311-000090	O-RING, 1AP9.0	1	1	1	1				
27	2	24311-000120	O-RING, 1AP12.0	2	2	2	2				
28	2	24311-000160	O-RING, 1AP16.0	1	1	1	1				
29	2	24311-000180	O-RING, 1AP18.0	1	1	1	1				
30	2	26450-060162	BOLT, M6X 16	9	9	9	9				
31	2	26716-080002	NUT, M8	1	1	1	1				
32	2	26756-060002	NUT, LOCK M6	2	2	2	2				
33	2	26979-040052	SCREW, M4X 5	1	1	1	1				
34	2	26979-060202	SCREW, M6X20	2	2	2	2				
34A	2	22117-120000	WASHER, 12	1	1	1	1			W	
	(A=F100126)	(B=F200113)	(C=F300440) (D=F400492)								
34B	2	22190-060000	WASHER, SEAL 6	8	8	8	8			W	
35	1	1A7180-22510	STAY, WIRE	1	1	1	1				
36	1	1A7180-24141	GASKET, CASE	1	1	1	1				
37	1	1A7640-78980	SPRING	1	1	1	1				
38	1	22217-080000	WASHER, SPRING 8	1	1	1	1				
39	1	26106-080602	BOLT, M8X 60 PLATED	8	8	8	8				
40	1	26106-080802	BOLT, M8X 80 PLATED	6	6	6	6				
41	1	26716-080002	NUT, M8	1	1	1	1				

N:Old $\xleftarrow[\text{No}]{\text{Yes}}$ New, Q:Old $\xleftarrow[\text{Yes}]{\text{No}}$ New, R:Old $\xleftarrow[\text{Yes}]{\text{Yes}}$ New, S:Old $\xleftarrow[\text{No}]{\text{No}}$ New, W:Add, Z:Discontinued, F:Interchangeable by set, K:Q'ty Change

Copyright (C) 2014 YANMAR CO., LTD. All RightsReserved.

Fig.45. HYDRAULIC PIPING

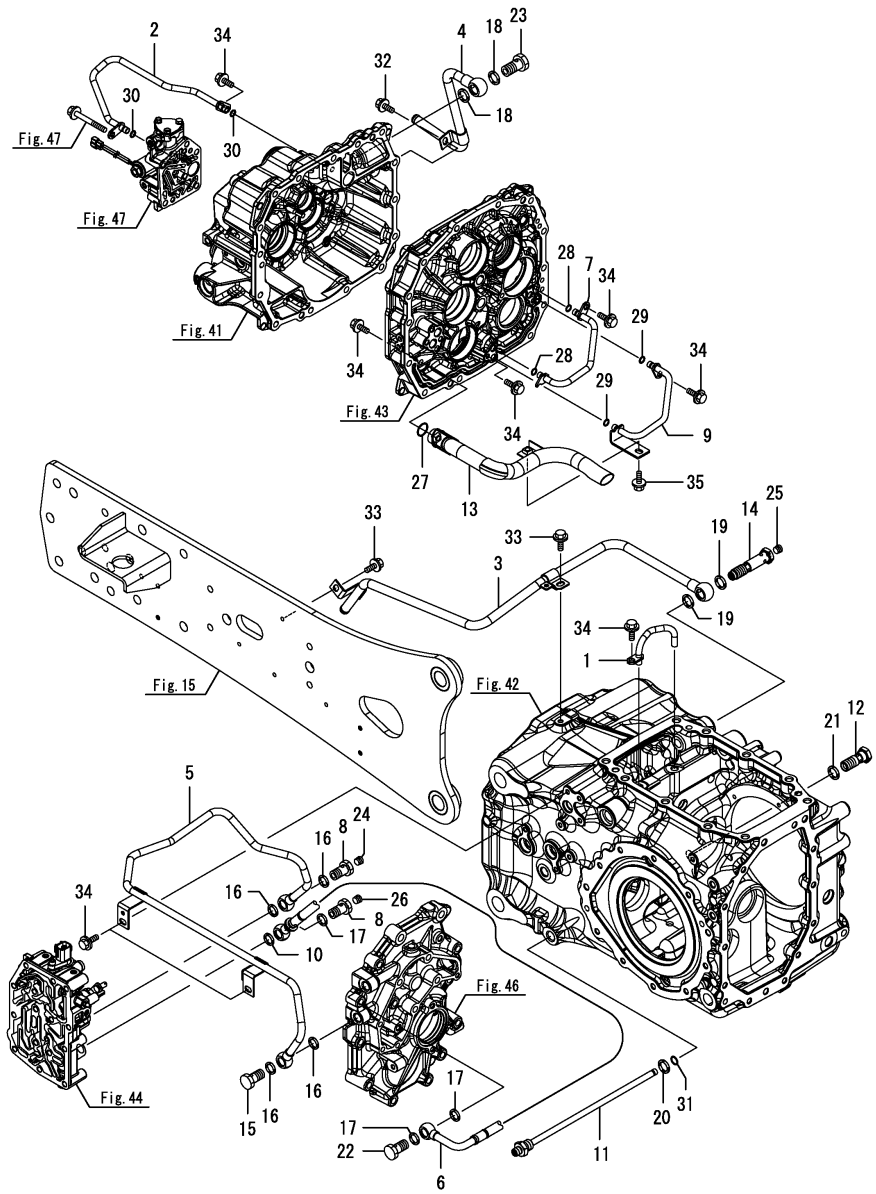

(A)=EG326Y (D)=EG334Y
(B)=EG328Y (E)=
(C)=EG330Y (F)=

No.	Lev.	Parts No.	Description	Q'ty (A)	(B)	(C)	(D)	(E)	(F)	I	R
1	1	1A7180-24260	PIPE ASSY, OIL	1	1	1	1				
2	1	1A7180-24350	PIPE ASSY, PRESSURE	1	1	1	1				
3	1	1A7180-24370	PIPE ASSY, COOLER A	1	1	1	1				
4	1	1A7180-24410	PIPE ASSY, RETURN	1	1	1	1				
5	1	1A7180-24541	PIPE ASSY, PRESSURE	1	1	1	1				
6	1	1A7180-24550	HOSE, PRESSURE	1	1	1	1				
7	1	1A7180-24560	PIPE ASSY, PRESSURE	1	1	1	1				
8	1	1A7180-24580	BOLT, JOINT M16	2	2	2	2				
9	1	1A7180-24621	PIPE ASSY, PRESSURE	1	1	1	1				
10	1	1A7180-24680	GASKET, 16X2.3	1	1	1	1				
11	1	1A7180-24700	PIPE ASSY, PRESSURE	1	1	1	1				
12	1	1A7180-24750	BOLT, M18	1	1	1	1				
13	1	1A7180-24912	PIPE ASSY, PRESSURE	1	1	1	1				
14	1	1A7180-48250	BOLT, M18	1	1	1	1				
14-1	1	1A7180-48251	BJ BOLT M18 CMP	1	1	1	1			N	
	(A=F100008)	(B=F200001)	(C=F300001) (D=F400004)								
15	1	194680-77750	BOLT ASSY, JOINT	1	1	1	1				
16	1	23414-160021	GASKET, 16X1.0	4	4	4	4				
17	1	23414-160021	GASKET, 16X1.0	3	3	3	3				
18	1	23414-180023	GASKET, 18X1.0	2	2	2	2				
19	1	23414-180023	GASKET, 18X1.0	2	2	2	2				
20	1	23414-180023	GASKET, 18X1.0	1	1	1	1				
21	1	23414-180023	GASKET, 18X1.0	1	1	1	1				
22	1	23857-100000	BOLT, JOINT 10	1	1	1	1				
23	1	23857-120000	BOLT, JOINT 12	1	1	1	1				
24	1	23871-010000	PLUG, R01	1	1	1	1				
25	1	23871-010000	PLUG, R01	1	1	1	1				
26	1	23871-010000	PLUG, R01	1	1	1	1				
27	1	24311-000224	O-RING, 1AP22.4	1	1	1	1				
28	1	24341-000080	O-RING, 1AS8.0	2	2	2	2				
29	1	24341-000080	O-RING, 1AS8.0	2	2	2	2				
30	1	24341-000080	O-RING, 1AS8.0	2	2	2	2				
31	1	24341-000080	O-RING, 1AS8.0	1	1	1	1				
32	1	26106-080162	BOLT, M8X 16 PLATED	1	1	1	1				
33	1	26106-080162	BOLT, M8X 16 PLATED	2	2	2	2				
34	1	26106-080162	BOLT, M8X 16 PLATED	8	8	8	8				
35	1	26106-080162	BOLT, M8X 16 PLATED	1	1	1	1				

Remarks
* Applied to the following models.
EG326, EG328, EG330, EG334
EG330A (Cabin specification), EG334A (Cabin specification)

N:Old $\frac{\text{Yes}}{\text{No}}$ New, Q:Old $\frac{\text{No}}{\text{Yes}}$ New, R:Old $\frac{\text{Yes}}{\text{Yes}}$ New, S:Old $\frac{\text{No}}{\text{No}}$ New, W:Add, Z:Discontinued, F:Interchangeable by set, K:Q'ty Change

Copyright (C) 2014 YANMAR CO., LTD. All RightsReserved.

Fig.233. HYDRAULIC PIPING(A,K,KW,KWA)

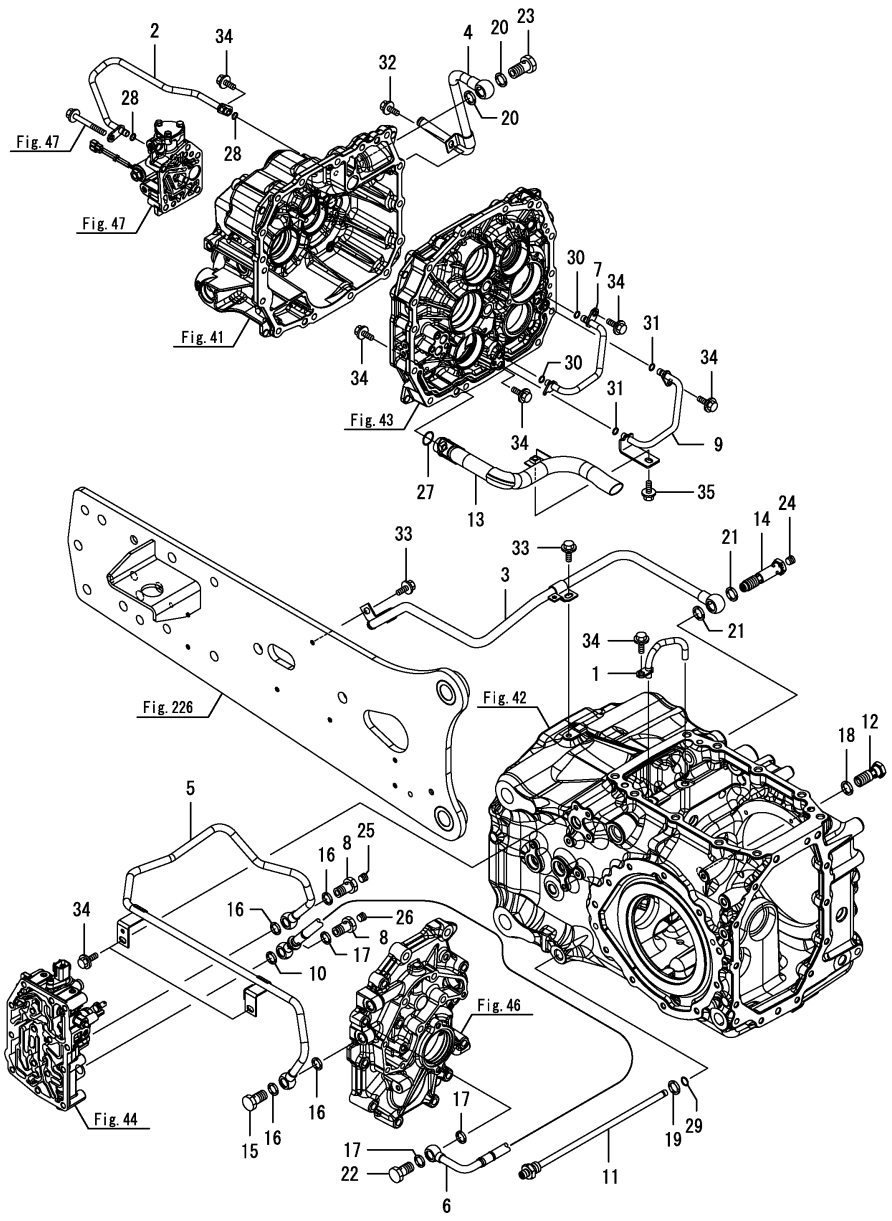

(A)=EG326Y (B)=EG328Y (C)=EG330Y (D)=EG334Y (E)= (F)=

No.	Lev.	Parts No.	Description	Q'ty (A)	(B)	(C)	(D)	(E)	(F)	I	R
1	1	1A7180-24260	PIPE ASSY, OIL			1	1				
2	1	1A7180-24350	PIPE ASSY, PRESSURE			1	1				
3	1	1A7160-24370	PIPE CMP,COOLER A			1	1				
4	1	1A7180-24410	PIPE ASSY, RETURN			1	1				
5	1	1A7180-24541	PIPE ASSY, PRESSURE			1	1				
6	1	1A7180-24550	HOSE, PRESSURE			1	1				
7	1	1A7180-24560	PIPE ASSY, PRESSURE			1	1				
8	1	1A7180-24580	BOLT, JOINT M16			2	2				
9	1	1A7180-24621	PIPE ASSY, PRESSURE			1	1				
10	1	1A7180-24680	GASKET, 16X2.3			1	1				
11	1	1A7180-24700	PIPE ASSY, PRESSURE			1	1				
12	1	1A7180-24750	BOLT, M18			1	1				
13	1	1A7180-24912	PIPE ASSY, PRESSURE			1	1				
14	1	1A7180-48250	BOLT, M18			1	1				
14-1	1	1A7180-48251	BJ BOLT M18 CMP			1	1			N	
			(C=F300001) (D=F400004)								
15	1	194680-77750	BOLT ASSY, JOINT			1	1				
16	1	23414-160021	GASKET, 16X1.0			4	4				
17	1	23414-160021	GASKET, 16X1.0			3	3				
18	1	23414-180023	GASKET, 18X1.0			1	1				
19	1	23414-180023	GASKET, 18X1.0			1	1				
20	1	23414-180023	GASKET, 18X1.0			2	2				
21	1	23414-180023	GASKET, 18X1.0			2	2				
22	1	23857-100000	BOLT, JOINT 10			1	1				
23	1	23857-120000	BOLT, JOINT 12			1	1				
24	1	23871-010000	PLUG, R01			1	1				
25	1	23871-010000	PLUG, R01			1	1				
26	1	23871-010000	PLUG, R01			1	1				
27	1	24311-000224	O-RING, 1AP22.4			1	1				
28	1	24341-000080	O-RING, 1AS8.0			2	2				
29	1	24341-000080	O-RING, 1AS8.0			1	1				
30	1	24341-000080	O-RING, 1AS8.0			2	2				
31	1	24341-000080	O-RING, 1AS8.0			2	2				
32	1	26106-080162	BOLT, M8X 16 PLATED			1	1				
33	1	26106-080162	BOLT, M8X 16 PLATED			2	2				
34	1	26106-080162	BOLT, M8X 16 PLATED			8	8				
35	1	26106-080162	BOLT, M8X 16 PLATED			1	1				

Remarks
* Applied to the following models.
EG330A(Rops specification), EG330K, EG330KW, EG334A(Rops specification), EG334KW, EG334KWA

N:Old ◄Yes/No► New, Q:Old ◄No/Yes► New, R:Old ◄Yes/Yes► New, S:Old ◄No/No► New, W:Add, Z:Discontinued, F:Interchangeable by set, K:Q'ty Change

Copyright (C) 2014 YANMAR CO., LTD. All RightsReserved.

Fig.46. REAR COVER

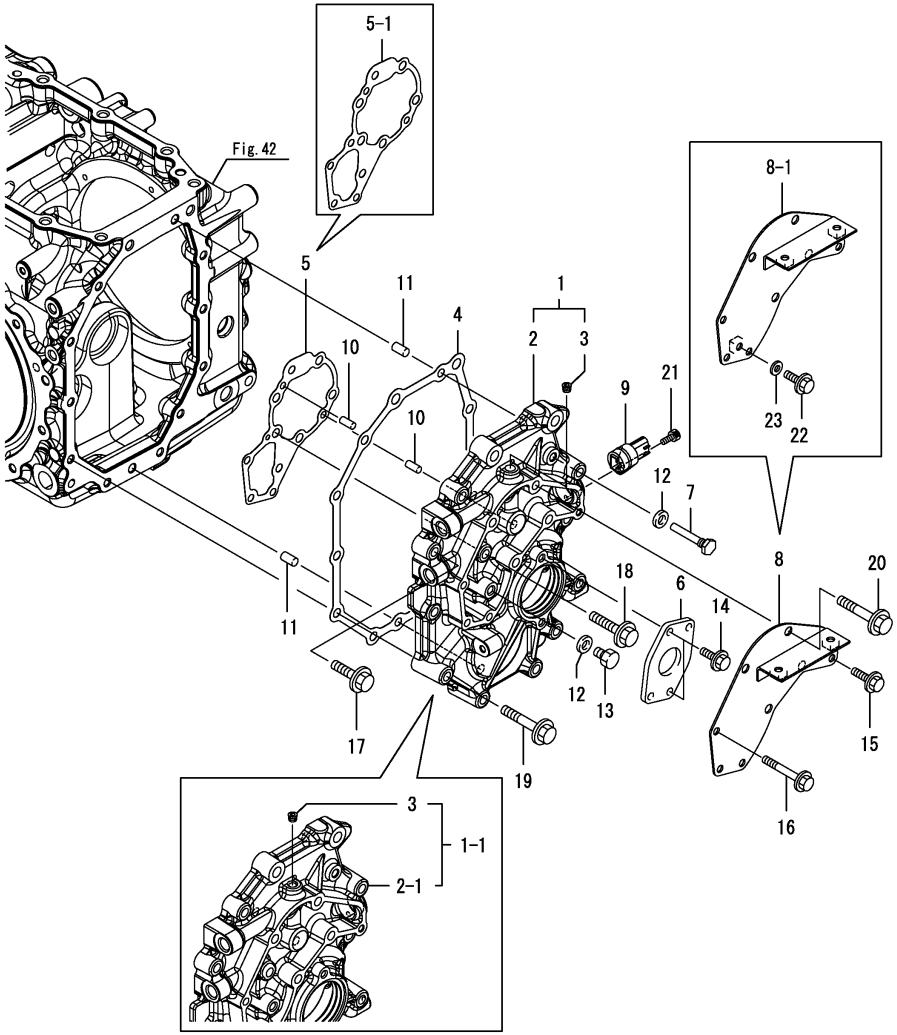

(A)=EG326Y (D)=EG334Y
(B)=EG328Y (E)=
(C)=EG330Y (F)=

No.	Lev.	Parts No.	Description	Q'ty (A)	(B)	(C)	(D)	(E)	(F)	I	R
1	1	1A7180-24050	COVER KIT, REAR	1	1	1	1				
1-1	1	1A7180-24051	COVER,REAR CMP	1	1	1	1			S	
	(A=F100008)	(B=F200001)	(C=F300001) (D=F400004)								
2	2	1A7180-24240	COVER, I-HMT REAR	1	1	1	1				
2-1	2	1A7180-24241	COVER, REAR I-HMT	1	1	1	1			S	
	(A=F100008)	(B=F200001)	(C=F300001) (D=F400004)								
3	2	23871-010000	PLUG, R01	1	1	1	1				
4	1	1A7180-24250	GASKET, REAR COVER	1	1	1	1				
5	1	1A7180-24290	GASKET, I-HMT	1	1	1	1				
5-1	1	1A7180-24291	GASKET, I-HMT	1	1	1	1			S	
	(A=F100008)	(B=F200001)	(C=F300001) (D=F400004)								
6	1	198255-24460-1	PLATE, OIL SEAL	1	1	1	1				
7	1	1A7180-24830	PLUG, EMERGENCY	1	1	1	1				
8	1	1A7180-24850	COVER, VALVE	1	1	1	1				
8-1	1	1A7180-24851	COVER ASSY, SOLENOID	1	1	1	1			F	1
	(A=F100008)	(B=F200001)	(C=F300001) (D=F400004)								
9	1	1A7180-52050	CONNECTOR, ADAPTER	1	1	1	1				
10	1	22312-080180	PIN, PARALLEL M8X18	2	2	2	2				
11	1	22312-100180	PIN, PARALLEL M10X18	2	2	2	2				
12	1	23414-100014	GASKET, 10X1.0	2	2	2	2				
13	1	23887-100002	PLUG, 10	1	1	1	1				
14	1	26106-080122	BOLT, M8X 12 PLATED	2	2	2	2				
15	1	26106-080162	BOLT, M8X 16 PLATED	1	1	1	1				
16	1	26106-080602	BOLT, M8X 60 PLATED	3	3	3	3				
17	1	26106-100402	BOLT, M10X 40 PLATED	4	4	4	4				
18	1	26106-100502	BOLT, M10X 50 PLATED	1	1	1	1				
19	1	26106-100602	BOLT, M10X 60 PLATED	6	6	6	6				
20	1	26106-100602	BOLT, M10X 60 PLATED	4	4	4	4				
21	1	26450-060122	BOLT, M6X 12	1	1	1	1				
22	1	26106-080122	BOLT, M8X 12 PLATED	1	1	1	1			W	1
	(A=F100008)	(B=F200001)	(C=F300001) (D=F400004)								
23	1	22190-080000	WASHER, SEAL 8	1	1	1	1			W	1
	(A=F100008)	(B=F200001)	(C=F300001) (D=F400004)								

Remarks
(1)Interchangeable by simultaneous replacement with No.8-1, 22, 23.

N:Old $\xleftarrow[\text{No}]{\text{Yes}}$ New, Q:Old $\xleftarrow[\text{Yes}]{\text{No}}$ New, R:Old $\xleftarrow[\text{Yes}]{\text{Yes}}$ New, S:Old $\xleftarrow[\text{No}]{\text{No}}$ New, W:Add, Z:Discontinued, F:Interchangeable by set, K:Q'ty Change

Copyright (C) 2014 YANMAR CO., LTD. All RightsReserved.

Fig.47. P.T.O. VALVE

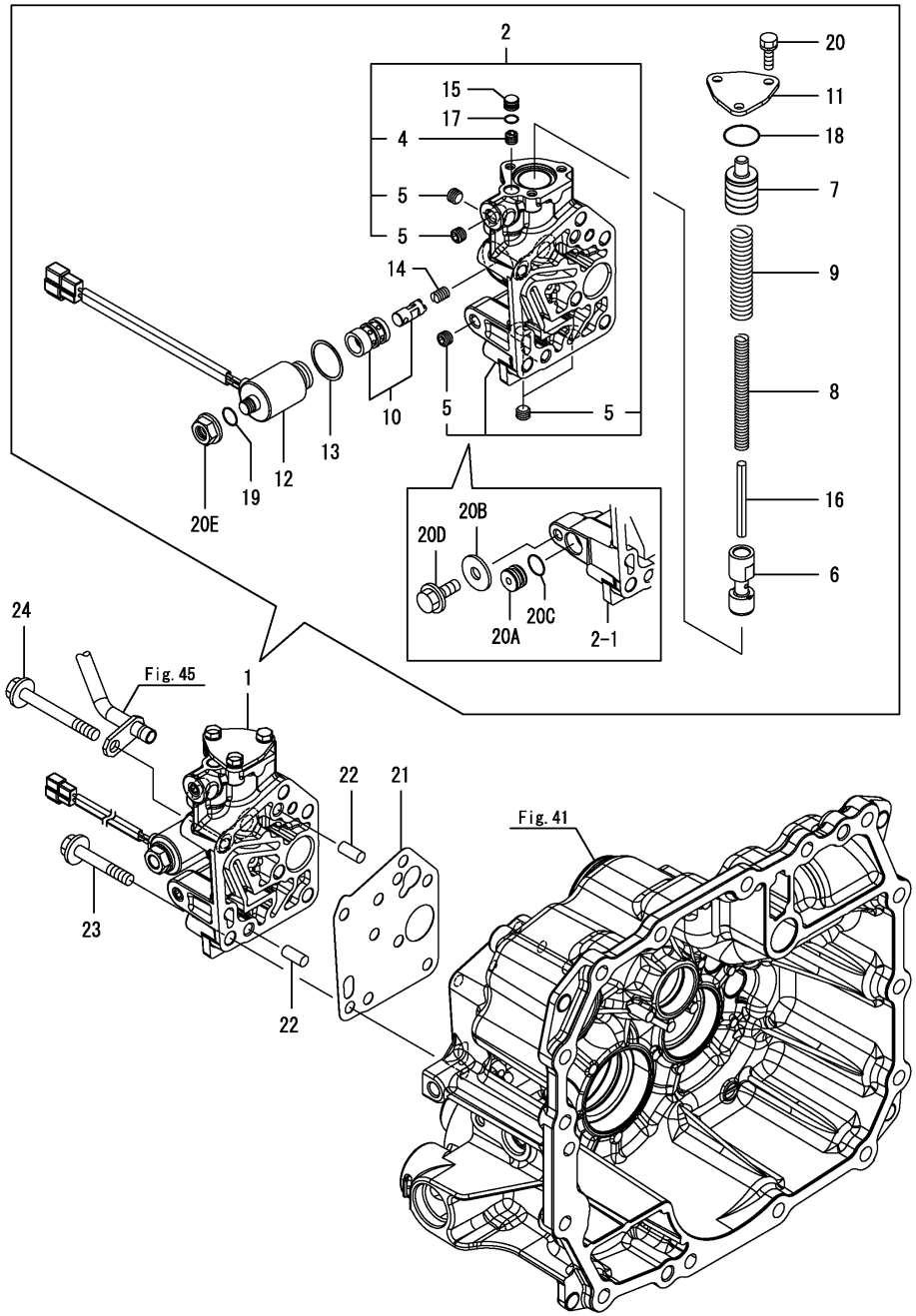

(A)=EG326Y (D)=EG334Y
(B)=EG328Y (E)=
(C)=EG330Y (F)=

No.	Lev.	Parts No.	Description	Q'ty (A)	(B)	(C)	(D)	(E)	(F)	I	R
1	1	1682D2-00010	PTO VALVE CMP	1	1	1	1				
1-1	1	1682D2-00011	PTO VALVE CMP	1	1	1	1			N	
	(A=F100152)	(B=F200139)	(C=F300558) (D=F400636)								
2	2	1682D2-01010	VALVEBODY(A CMP	1	1	1	1				
2-1	2	1682D2-01011	BODY ASSY, VALVE 2A	1	1	1	1			S	
	(A=F100152)	(B=F200139)	(C=F300558) (D=F400636)								
4	3	1682D1-01100	ORIFICE	1	1	1	1				
5	3	23871-010000	PLUG, R01	4	4	4	4				
6	2	1682D1-01050	VALVE, MODULATION	1	1	1	1				
7	2	1682D1-01060	PISTON(ACCUMULATOR	1	1	1	1				
8	2	1682D1-01070	SP(INNER	1	1	1	1				
9	2	1682D1-01080	SP(OUTER	1	1	1	1				
10	2	178076-02430	VALVE ASSY, SOLENOID	1	1	1	1				
11	2	198213-24750	COVER, DRV	1	1	1	1				
12	2	1A6770-26610	SOLENOID ASSY	1	1	1	1				
13	2	192159-27780	GASKET, SOLENOID	1	1	1	1				
14	2	192159-27830	SPRING,SOLENOID	1	1	1	1				
15	2	194170-45370	PLUG	1	1	1	1				
16	2	22351-060060	PIN, SPRING 6.0X60	1	1	1	1				
17	2	24311-000070	O-RING, 1AP7.0	1	1	1	1				
18	2	24311-000240	O-RING, 1AP24.0	1	1	1	1				
19	2	24341-000112	O-RING, 1AS11.2	1	1	1	1				
20	2	26016-060162	BOLT, M6X 16	3	3	3	3				
20A	2	1682D2-01150	PLUG, 16	1	1	1	1			W	
	(A=F100152)	(B=F200139)	(C=F300558) (D=F400636)								
20B	2	22157-080000	WASHER, 8	1	1	1	1			W	
	(A=F100152)	(B=F200139)	(C=F300558) (D=F400636)								
20C	2	24311-000120	O-RING, 1AP12.0	1	1	1	1			W	
	(A=F100152)	(B=F200139)	(C=F300558) (D=F400636)								
20D	2	26106-080162	BOLT, M8X 16 PLATED	1	1	1	1			W	
	(A=F100152)	(B=F200139)	(C=F300558) (D=F400636)								
20E	2	192159-27790	PLASTIC NUT	1	1	1	1				
21	1	1A7180-26840	PACKING, PTO	1	1	1	1				
22	1	22312-080180	PIN, PARALLEL M8X18	2	2	2	2				
23	1	26106-080502	BOLT, M8X 50 PLATED	5	5	5	5				
24	1	26106-080702	BOLT, M8X 70 PLATED	1	1	1	1				

N:Old $\xleftarrow[\text{No}]{\text{Yes}}$ New, Q:Old $\xleftarrow[\text{Yes}]{\text{No}}$ New, R:Old $\xleftarrow[\text{Yes}]{\text{Yes}}$ New, S:Old $\xleftarrow[\text{No}]{\text{No}}$ New, W:Add, Z:Discontinued, F:Interchangeable by set, K:Q'ty Change

Copyright (C) 2014 YANMAR CO., LTD. All RightsReserved.

Fig.48. PUMP SHAFT

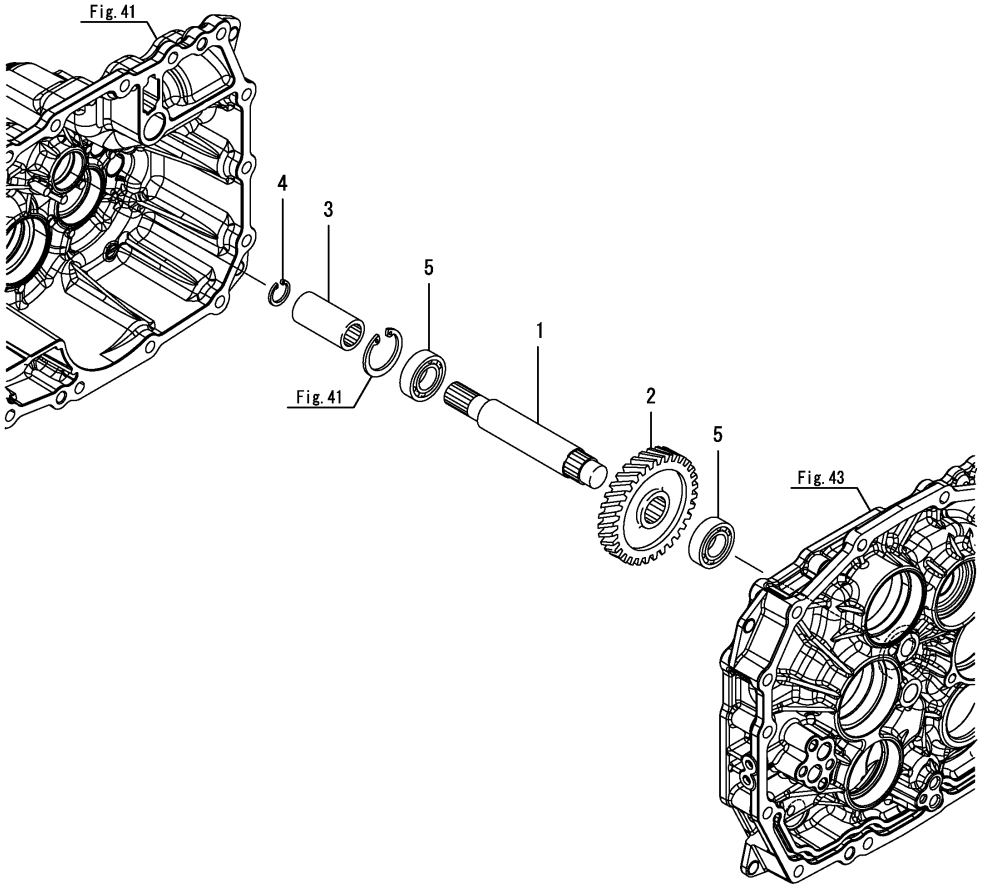

(A)=EG326Y (D)=EG334Y
(B)=EG328Y (E)=
(C)=EG330Y (F)=

No.	Lev.	Parts No.	Description	Q'ty (A)	(B)	(C)	(D)	(E)	(F)	I	R
1	1	1A7180-24450	SHAFT, PUMP DRIVE	1	1	1	1				
2	1	1A7180-24470	GEAR, PUMP 32	1	1	1	1				
3	1	194300-25100	COUPLING	1	1	1	1				
4	1	22252-000150	RING, 15	1	1	1	1				
5	1	24101-060034	BEARING, BALL 6003	2	2	2	2				

N:Old $\xleftrightarrow[\text{No}]{\text{Yes}}$ New, Q:Old $\xleftrightarrow[\text{Yes}]{\text{No}}$ New, R:Old $\xleftrightarrow[\text{Yes}]{\text{Yes}}$ New, S:Old $\xleftrightarrow[\text{No}]{\text{No}}$ New, W:Add, Z:Discontinued, F:Interchangeable by set, K:Q'ty Change

Copyright (C) 2014 YANMAR CO., LTD. All RightsReserved.

Fig.49. INPUT SHAFT

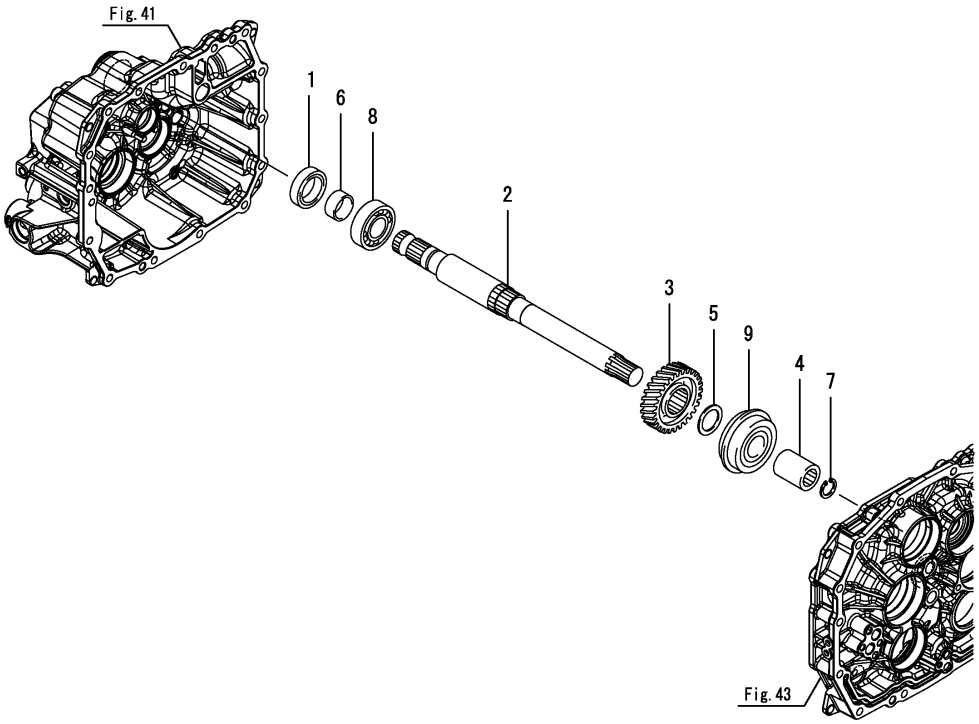

(A)=EG326Y (D)=EG334Y
(B)=EG328Y (E)=
(C)=EG330Y (F)=

No.	Lev.	Parts No.	Description	Q'ty (A)	(B)	(C)	(D)	(E)	(F)	I	R
1	1	198200-24320	SEAL, OIL TC304508	1	1	1	1				
2	1	1A7180-25100	SHAFT, INPUT	1	1	1	1				
3	1	1A7180-25110	GEAR, 29	1	1	1	1				
4	1	198212-25150	COUPLING, 13X16/32	1	1	1	1				
5	1	194190-26840	SPACER, 25X35X1.6	1	1	1	1				
6	1	1E6190-54080	SLEEVE SI25X30X13	1	1	1	1				
7	1	22252-000190	RING, 19	1	1	1	1				
8	1	24101-062054	BEARING, BALL 6205	1	1	1	1				
9	1	24121-063054	BEARING, BALL 6305NR	1	1	1	1				

N:Old $\xleftarrow[\text{No}]{\text{Yes}}$ New, Q:Old $\xleftarrow[\text{Yes}]{\text{No}}$ New, R:Old $\xleftarrow[\text{Yes}]{\text{Yes}}$ New, S:Old $\xleftarrow[\text{No}]{\text{No}}$ New, W:Add, Z:Discontinued, F:Interchangeable by set, K:Q'ty Change

Copyright (C) 2014 YANMAR CO., LTD. All RightsReserved.

Fig.50. DAMPER SHAFT

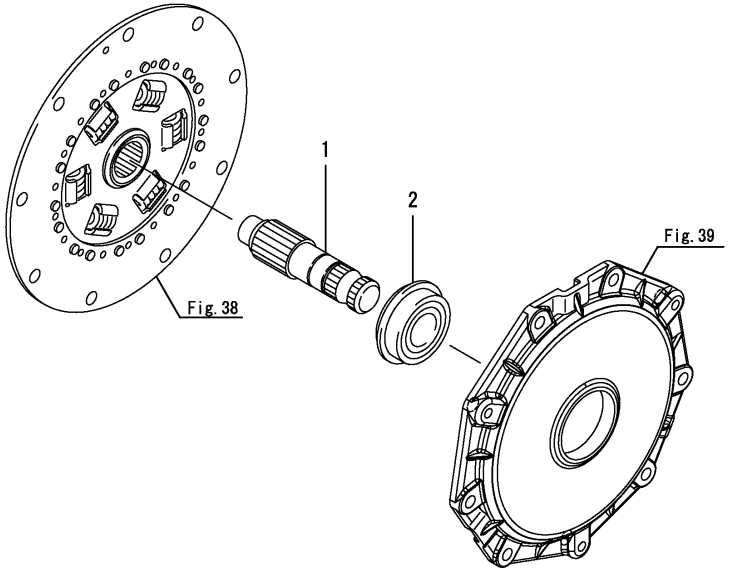

(A)=EG326Y (D)=EG334Y
(B)=EG328Y (E)=
(C)=EG330Y (F)=

No.	Lev.	Parts No.	Description	Q'ty (A)	(B)	(C)	(D)	(E)	(F)	I	R
1	1	1A7180-25430	SHAFT, DAMPER	1	1	1	1				
2	1	1A7180-25450	BEARING, 6205UUNR-C3	1	1	1	1				

N:Old ◄Yes/No► New, Q:Old ◄No/Yes► New, R:Old ◄Yes/Yes► New, S:Old ◄No/No► New, W:Add, Z:Discontinued, F:Interchangeable by set, K:Q'ty Change

Copyright (C) 2014 YANMAR CO., LTD. All RightsReserved.

Fig.51. I-H.M.T. OUTPUT

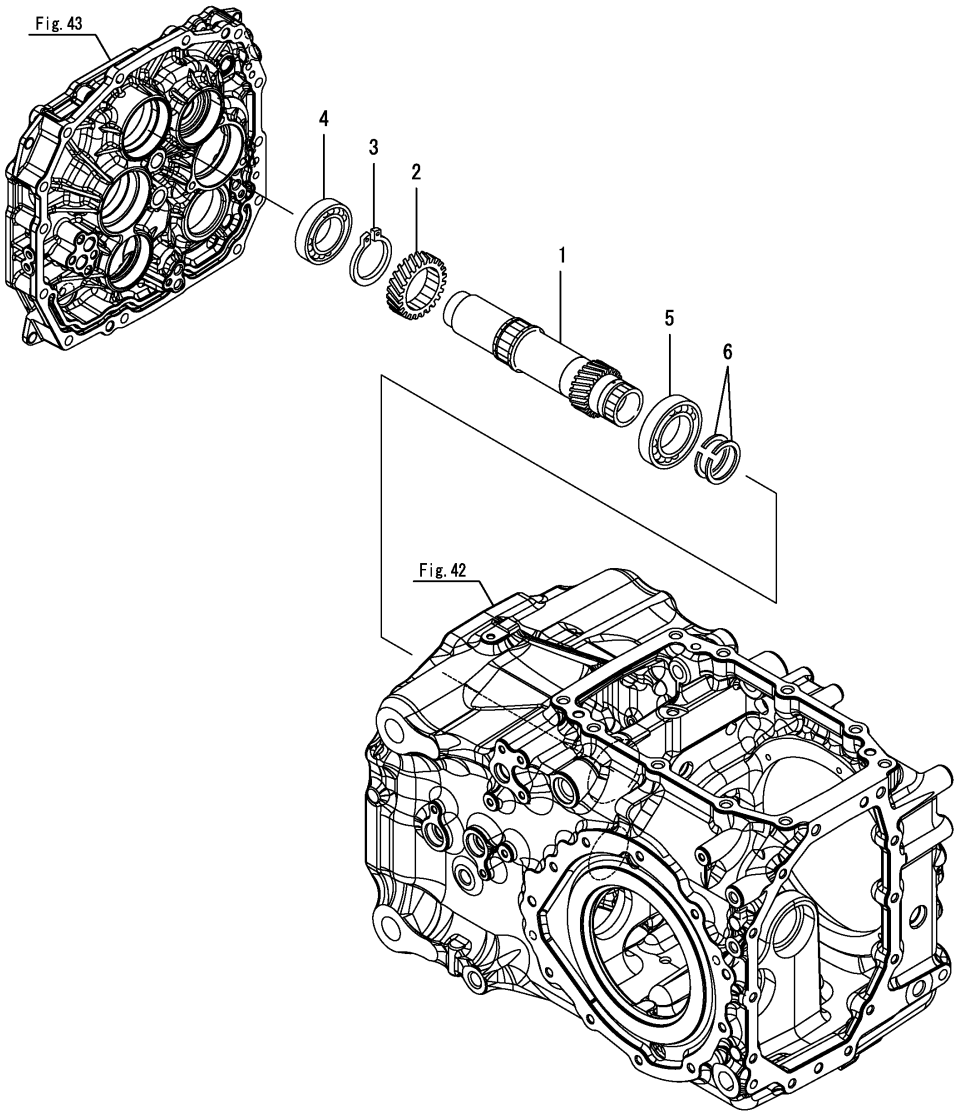

(A)=EG326Y (D)=EG334Y
(B)=EG328Y (E)=
(C)=EG330Y (F)=

No.	Lev.	Parts No.	Description	Q'ty (A)	(B)	(C)	(D)	(E)	(F)	I	R
1	1	1A7180-25120	SHAFT, OUTPUT	1	1	1	1				
2	1	1A7180-25150	GEAR, OUTPUT 25	1	1	1	1				
3	1	22242-000500	RING, 50	1	1	1	1				
4	1	24101-060084	BEARING, BALL 6008	1	1	1	1				
5	1	24107-060094	BEARING, BALL 6009ZZ	1	1	1	1				
6	1	24164-000452	CIRCLIP, 45	2	2	2	2				

N:Old $\xleftrightarrow[\text{No}]{\text{Yes}}$ New, Q:Old $\xleftrightarrow[\text{Yes}]{\text{No}}$ New, R:Old $\xleftrightarrow[\text{Yes}]{\text{Yes}}$ New, S:Old $\xleftrightarrow[\text{No}]{\text{No}}$ New, W:Add, Z:Discontinued, F:Interchangeable by set, K:Q'ty Change

Copyright (C) 2014 YANMAR CO., LTD. All RightsReserved.

Fig.52. REVERSER SHAFT

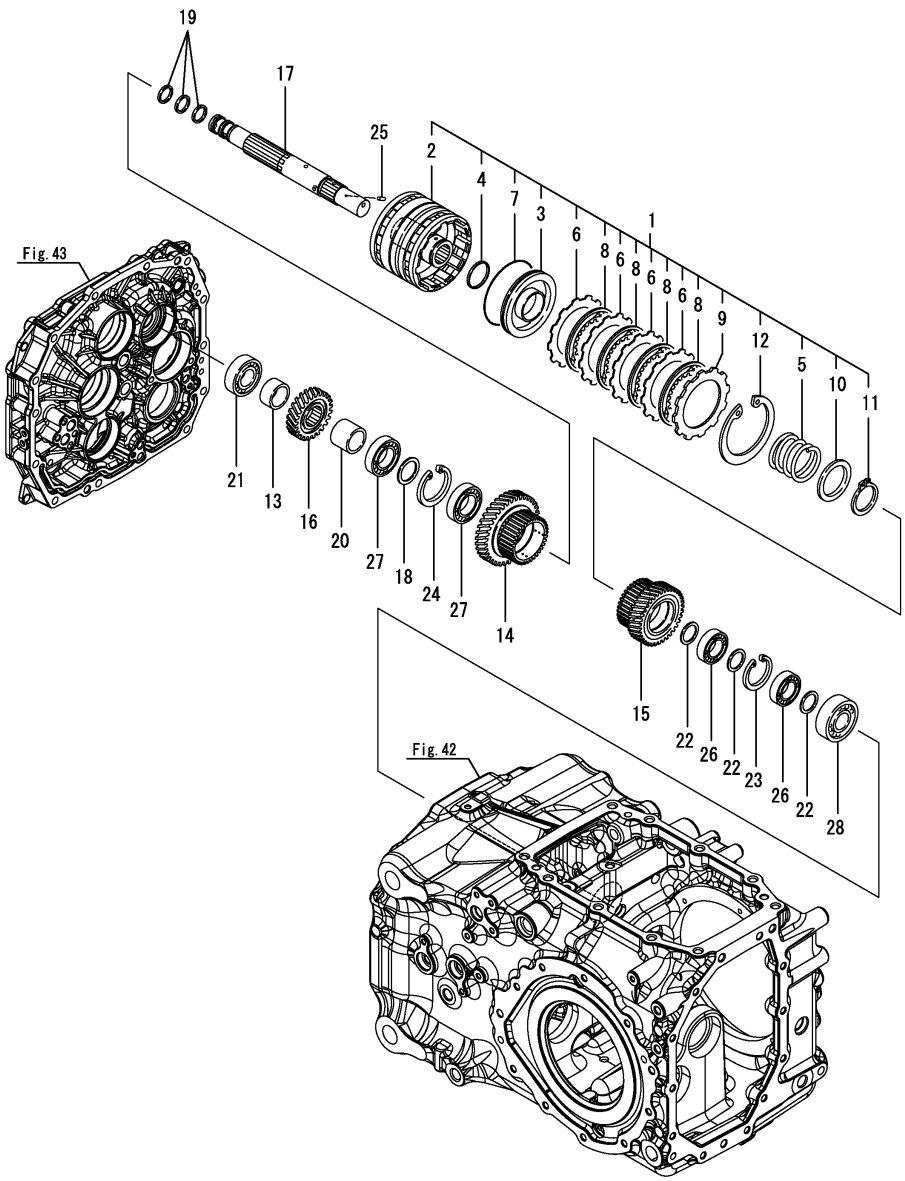

(A)=EG326Y (D)=EG334Y
(B)=EG328Y (E)=
(C)=EG330Y (F)=

No.	Lev.	Parts No.	Description	Q'ty (A)	(B)	(C)	(D)	(E)	(F)	I	R
1	1	1A7180-21200	CLUTCH, REVERSE	1	1	1	1				
2	2	1A7180-21210	CASE, CLUTCH	1	1	1	1				
2-1	2	1A7180-21211	CASE,CLUTCH	1	1	1	1			F	1
	(A=F100008)	(B=F200001)	(C=F300001) (D=F400004)								
3	2	1A7180-21220	PISTON	2	2	2	2				
4	2	1A7180-21230	RING, SEAL	2	2	2	2				
4-1	2	1A7180-26140	PACKING,19033	2	2	2	2			F	1
	(A=F100008)	(B=F200001)	(C=F300001) (D=F400004)								
5	2	1A7180-21240	SPRING, RETURN	2	2	2	2				
6	2	1A7180-21250	PLATE, STEEL 1.6	8	8	8	8				
7	2	1A7351-25830	RING, 96	2	2	2	2				
8	2	1A7351-26760	PLATE, DISK 2.0	8	8	8	8				
9	2	1A7351-26770	PLATE, STEEL 4.0	2	2	2	2				
10	2	1A7351-26790	WASHER	2	2	2	2				
11	2	1A6240-26830	CIRCLIP, C40 SHAFT	2	2	2	2				
12	2	22252-001000	RING, 100	2	2	2	2				
13	1	1A7400-24550	COLLAR, 30X38X19	1	1	1	1				
14	1	1A7180-25210	GEAR, 38	1	1	1	1				
15	1	1A7180-25220	GEAR, REVERSER 40	1	1	1	1				
16	1	1A7140-25260	GEAR, 25	1	1	1	1				
17	1	1A7180-25300	SHAFT ASSY, REVERSER	1	1	1	1				
17-1	1	1A7180-25301	SHAFT ASSY, REVERSER	1	1	1	1			R	
	(A=F100042)	(B=F200036)	(C=F300113) (D=F400137)								
18	1	194312-25470	SPACER, 30X40X2	1	1	1	1				
19	1	198167-26240	RING, SEAL 21X25X3	3	3	3	3				
20	1	1A7530-28280	COLLAR, 30X38X30.7	1	1	1	1				
21	1	194850-31380	BEARING, 6305RSH2	1	1	1	1				
22	1	1E8540-54130	COLLAR 25X33X1.75	3	3	3	3				
23	1	22252-000470	RING, 47	1	1	1	1				
24	1	22252-000550	RING, 55	1	1	1	1				
25	1	22351-030008	PIN, SPRING 3.0X 8	1	1	1	1				
26	1	24101-060054	BEARING, BALL 6005	2	2	2	2				
27	1	24101-060064	BEARING, BALL 6006	2	2	2	2				
28	1	24107-063054	BEARING, BALL 6305ZZ	1	1	1	1				

Remarks
(1)Interchangeable by simultaneous replacement with No.2-1 & 4-1.

N:Old $\frac{\text{Yes}}{\text{No}}$ New, Q:Old $\frac{\text{No}}{\text{Yes}}$ New, R:Old $\frac{\text{Yes}}{\text{Yes}}$ New, S:Old $\frac{\text{No}}{\text{No}}$ New, W:Add, Z:Discontinued, F:Interchangeable by set, K:Q'ty Change

Copyright (C) 2014 YANMAR CO., LTD. All RightsReserved.

Fig.53. REVERSER SHAFT(HIGH SPEED)

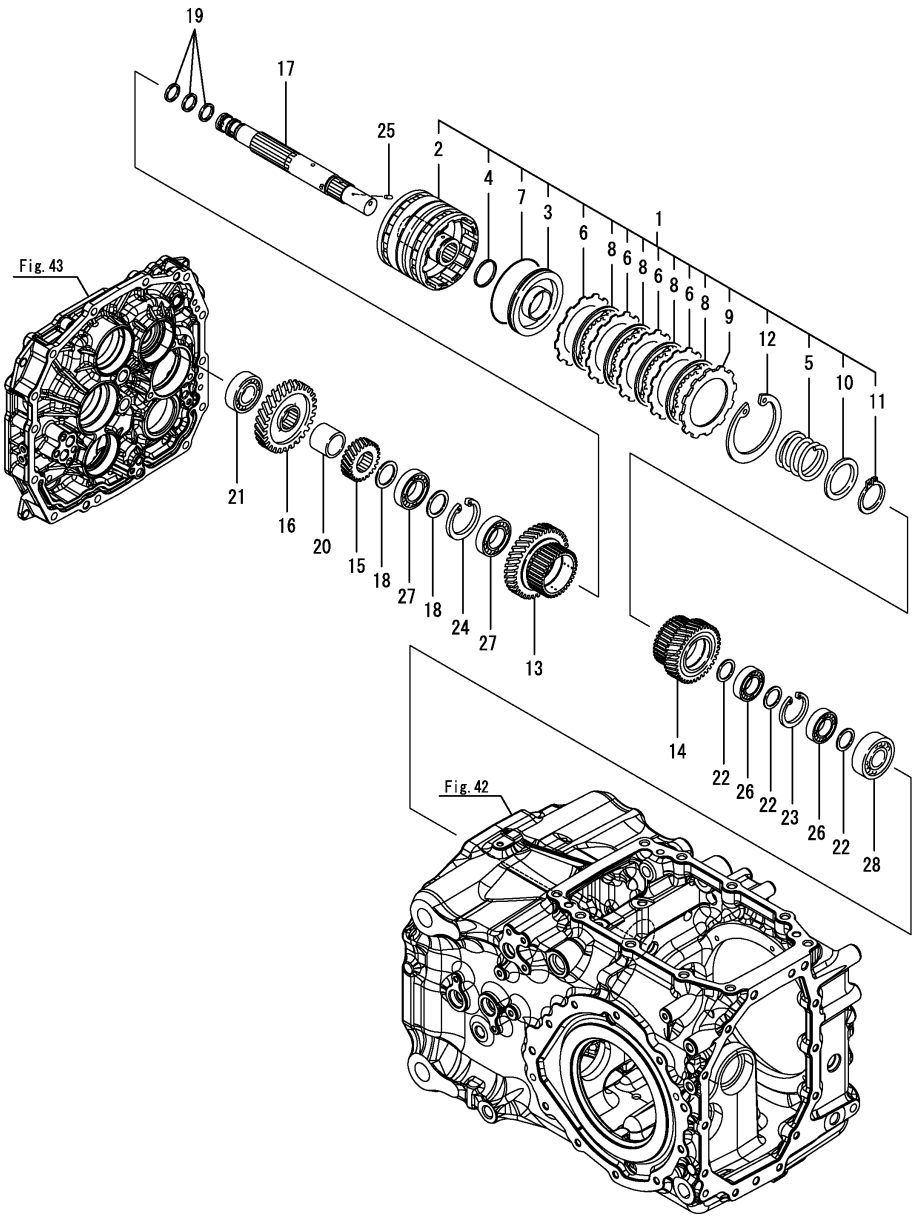

(A)=EG326Y (D)=EG334Y
(B)=EG328Y (E)=
(C)=EG330Y (F)=

No.	Lev.	Parts No.	Description	Q'ty (A)	(B)	(C)	(D)	(E)	(F)	I	R
1	1	1A7180-21200	CLUTCH, REVERSE	1	1	1	1				
2	2	1A7180-21210	CASE, CLUTCH	1	1	1	1				
2-1	2	1A7180-21211	CASE,CLUTCH	1	1	1	1			F	1
	(A=F100008)	(B=F200001)	(C=F300001) (D=F400004)								
3	2	1A7180-21220	PISTON	2	2	2	2				
4	2	1A7180-21230	RING, SEAL	2	2	2	2				
4-1	2	1A7180-26140	PACKING,19033	2	2	2	2			F	1
	(A=F100008)	(B=F200001)	(C=F300001) (D=F400004)								
5	2	1A7180-21240	SPRING, RETURN	2	2	2	2				
6	2	1A7180-21250	PLATE, STEEL 1.6	8	8	8	8				
7	2	1A7351-25830	RING, 96	2	2	2	2				
8	2	1A7351-26760	PLATE, DISK 2.0	8	8	8	8				
9	2	1A7351-26770	PLATE, STEEL 4.0	2	2	2	2				
10	2	1A7351-26790	WASHER	2	2	2	2				
11	2	1A6240-26830	CIRCLIP, C40 SHAFT	2	2	2	2				
12	2	22252-001000	RING, 100	2	2	2	2				
13	1	1A7180-25210	GEAR, 38	1	1	1	1				
14	1	1A7180-25220	GEAR, REVERSER 40	1	1	1	1				
15	1	1A7180-25230	GEAR, 20	1	1	1	1				
16	1	1A7170-25240	GEAR, 33	1	1	1	1				
17	1	1A7180-25300	SHAFT ASSY, REVERSER	1	1	1	1				
17-1	1	1A7180-25301	SHAFT ASSY, REVERSER	1	1	1	1			R	
	(A=F100042)	(B=F200036)	(C=F300113) (D=F400137)								
18	1	194312-25470	SPACER, 30X40X2	2	2	2	2				
19	1	198167-26240	RING, SEAL 21X25X3	3	3	3	3				
20	1	1A7530-28280	COLLAR, 30X38X30.7	1	1	1	1				
21	1	194850-31380	BEARING, 6305RSH2	1	1	1	1				
22	1	1E8540-54130	COLLAR 25X33X1.75	3	3	3	3				
23	1	22252-000470	RING, 47	1	1	1	1				
24	1	22252-000550	RING, 55	1	1	1	1				
25	1	22351-030008	PIN, SPRING 3.0X 8	1	1	1	1				
26	1	24101-060054	BEARING, BALL 6005	2	2	2	2				
27	1	24101-060064	BEARING, BALL 6006	2	2	2	2				
28	1	24107-063054	BEARING, BALL 6305ZZ	1	1	1	1				

Remarks
(1)Interchangeable by simultaneous replacement with No.2-1 & 4-1.

N:Old $\xleftrightarrow[\text{No}]{\text{Yes}}$ New, Q:Old $\xleftrightarrow[\text{Yes}]{\text{No}}$ New, R:Old $\xleftrightarrow[\text{Yes}]{\text{Yes}}$ New, S:Old $\xleftrightarrow[\text{No}]{\text{No}}$ New, W:Add, Z:Discontinued, F:Interchangeable by set, K:Q'ty Change

Copyright (C) 2014 YANMAR CO., LTD. All RightsReserved.

Fig.54. COUNTER SHAFT

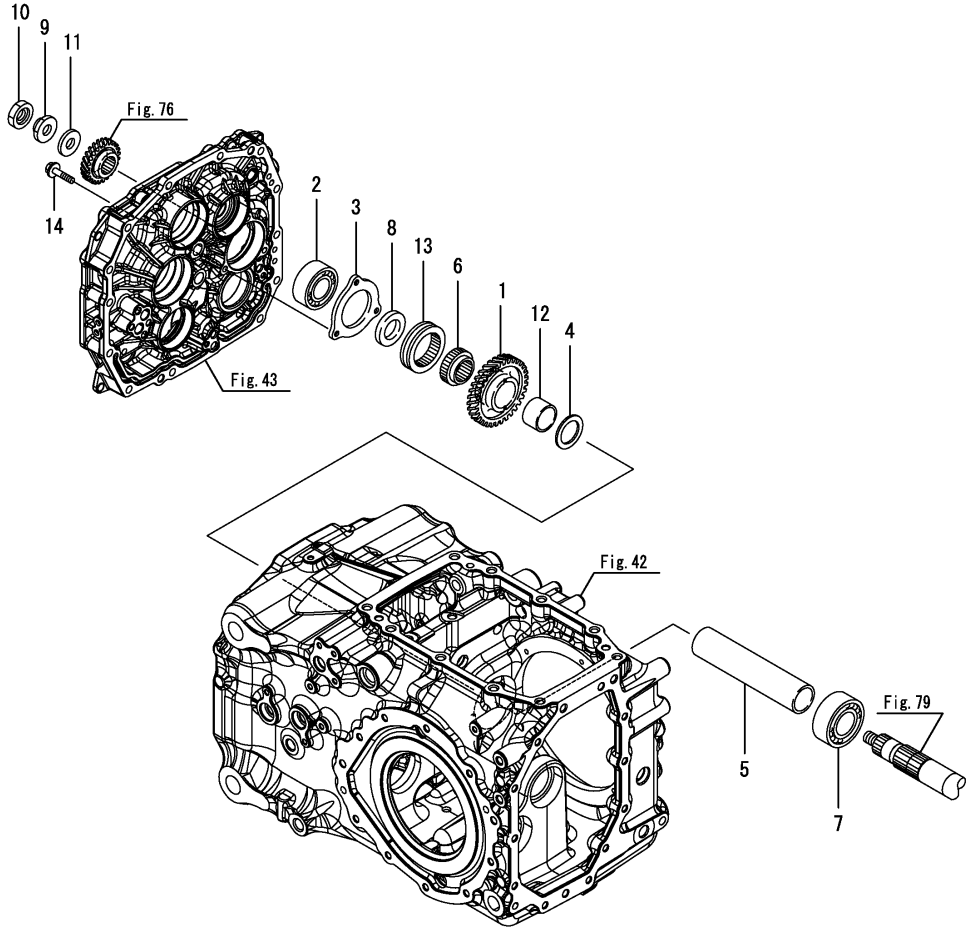

(A)=EG326Y (D)=EG334Y
(B)=EG328Y (E)=
(C)=EG330Y (F)=

No.	Lev.	Parts No.	Description	Q'ty (A)	(B)	(C)	(D)	(E)	(F)	I	R
1	1	1A7140-25270	GEAR, RANGE 37	1	1	1	1				
2	1	1A6650-25470	BEARING, 6306RSH2	1	1	1	1				
2-1	1	174842-13740	BEARING, 6306RSH2	1	1	1	1			R	
	(A=F100008)	(B=F200001)	(C=F300001) (D=F400004)								
3	1	1A7180-25540	PLATE, KEEP BEARING	1	1	1	1				
4	1	194180-25550	WASHER, 35X50X3	1	1	1	1				
5	1	1A7140-25570	COLLAR, 35X43X195	1	1	1	1				
6	1	198149-25790	COLLAR, SPLINE B	1	1	1	1				
7	1	198390-25790	BEARING, 6307R SH2	1	1	1	1				
8	1	198240-25810	WASHER, 30X50X8	1	1	1	1				
9	1	198220-25830	NUT, LOCK M16	1	1	1	1				
10	1	198220-25840	NUT, LOCK M16	1	1	1	1				
11	1	198415-25840	SPACER, 16X38X4.5	1	1	1	1				
12	1	198133-25860	BUSH, 34X40X26	1	1	1	1				
13	1	198149-25890	SHIFTER	1	1	1	1				
14	1	26106-080352	BOLT, M8X 35 PLATED	3	3	3	3				

N:Old $\overset{\text{Yes}}{\underset{\text{No}}{\leftrightarrows}}$ New, Q:Old $\overset{\text{No}}{\underset{\text{Yes}}{\leftrightarrows}}$ New, R:Old $\overset{\text{Yes}}{\underset{\text{Yes}}{\leftrightarrows}}$ New, S:Old $\overset{\text{No}}{\underset{\text{No}}{\leftrightarrows}}$ New, W:Add, Z:Discontinued, F:Interchangeable by set, K:Q'ty Change

Copyright (C) 2014 YANMAR CO., LTD. All RightsReserved.

Fig.55. COUNTER SHAFT(HIGH SPEED)

(A)=EG326Y (D)=EG334Y
(B)=EG328Y (E)=
(C)=EG330Y (F)=

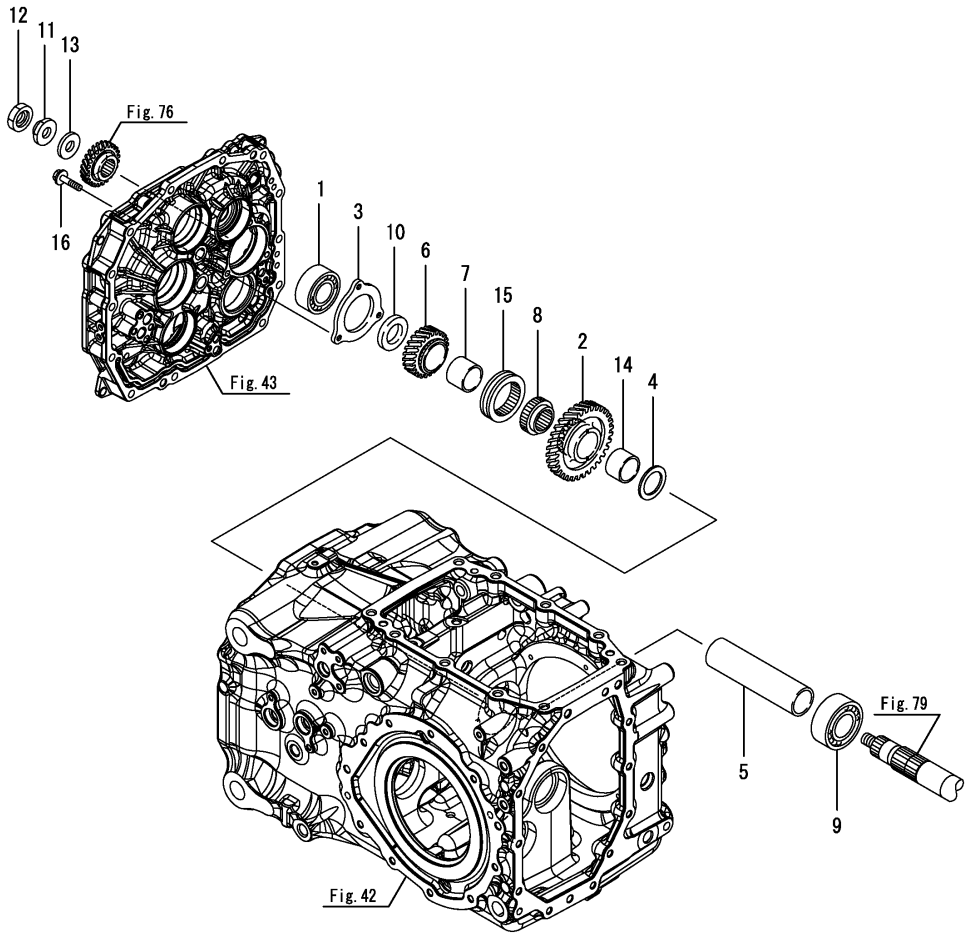

No.	Lev.	Parts No.	Description	Q'ty (A)	(B)	(C)	(D)	(E)	(F)	I	R
1	1	1A6650-25470	BEARING, 6306RSH2	1	1	1	1				
1-1	1	174842-13740	BEARING, 6306RSH2	1	1	1	1			R	
	(A=F100008)	(B=F200001)	(C=F300001) (D=F400004)								
2	1	1A7180-25530	GEAR, RANGE 42	1	1	1	1				
3	1	1A7180-25540	PLATE, KEEP BEARING	1	1	1	1				
4	1	194180-25550	WASHER, 35X50X3	1	1	1	1				
5	1	1A7180-25570	COLLAR, 35X43X167	1	1	1	1				
6	1	1A7360-25640	GEAR, COUNTER 25L	1	1	1	1				
7	1	198217-25680	BUSH, 34X40X28	1	1	1	1				
8	1	198149-25790	COLLAR, SPLINE B	1	1	1	1				
9	1	198390-25790	BEARING, 6307R SH2	1	1	1	1				
10	1	198240-25810	WASHER, 30X50X8	1	1	1	1				
11	1	198220-25830	NUT, LOCK M16	1	1	1	1				
12	1	198220-25840	NUT, LOCK M16	1	1	1	1				
13	1	198415-25840	SPACER, 16X38X4.5	1	1	1	1				
14	1	198133-25860	BUSH, 34X40X26	1	1	1	1				
15	1	198149-25890	SHIFTER	1	1	1	1				
16	1	26106-080352	BOLT, M8X 35 PLATED	3	3	3	3				

N:Old $\overset{\text{Yes}}{\underset{\text{No}}{\leftrightarrows}}$ New, Q:Old $\overset{\text{No}}{\underset{\text{Yes}}{\leftrightarrows}}$ New, R:Old $\overset{\text{Yes}}{\underset{\text{Yes}}{\leftrightarrows}}$ New, S:Old $\overset{\text{No}}{\underset{\text{No}}{\leftrightarrows}}$ New, W:Add, Z:Discontinued, F:Interchangeable by set, K:Q'ty Change

Copyright (C) 2014 YANMAR CO., LTD. All RightsReserved.

Fig.56. REVERSER SHAFT

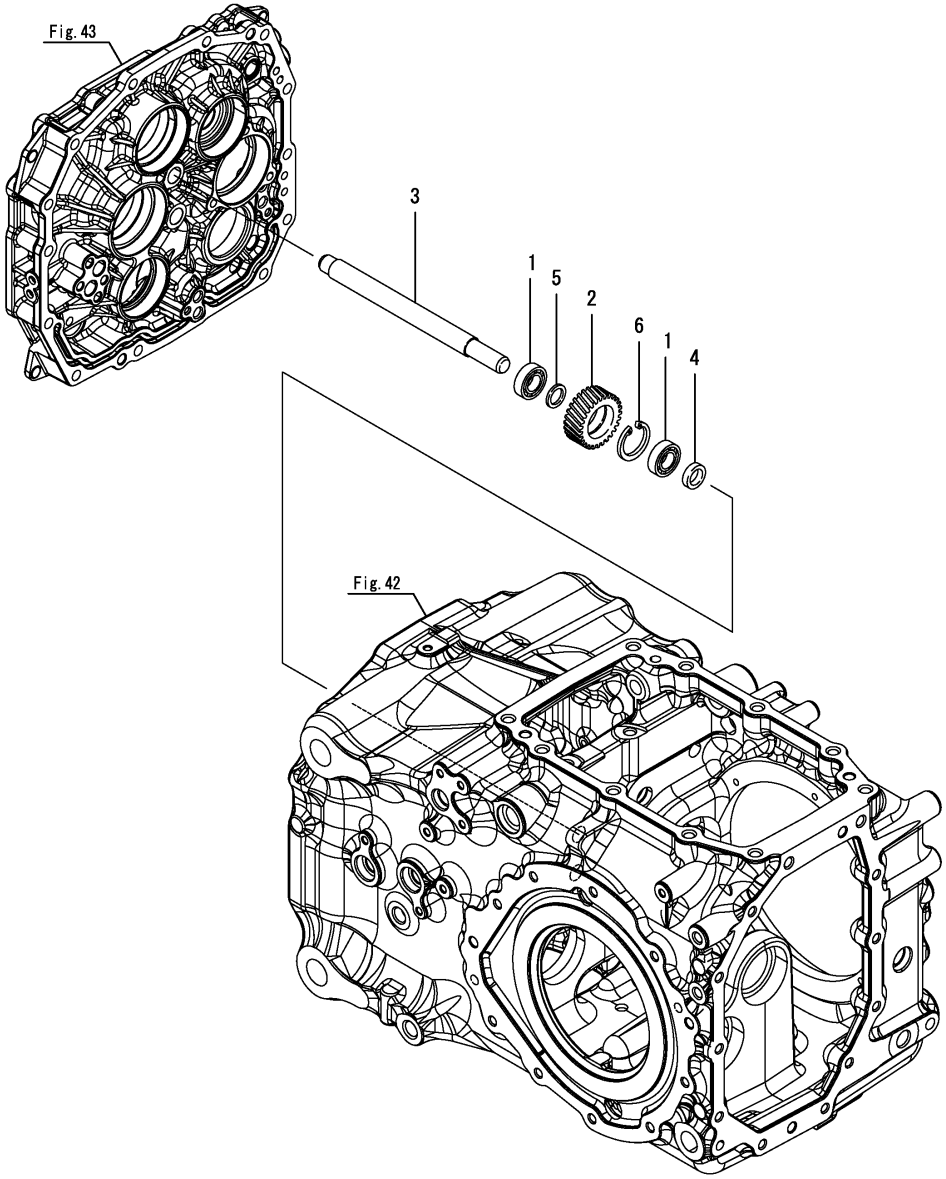

(A)=EG326Y (D)=EG334Y
(B)=EG328Y (E)=
(C)=EG330Y (F)=

No.	Lev.	Parts No.	Description	Q'ty (A)	(B)	(C)	(D)	(E)	(F)	I	R
1	1	1C6650-13030	BEARING, BALL TMB003	2	2	2	2				
2	1	1A7180-25250	GEAR, IDLE 27	1	1	1	1				
3	1	1A7180-25260	SHAFT, REVERSE IDLE	1	1	1	1				
4	1	1A7180-25270	COLLAR, 17X25X6	1	1	1	1				
5	1	194197-25930	WASHER, 17X24X1.6	1	1	1	1				
6	1	22252-000350	RING, 35	1	1	1	1				

N:Old $\xleftrightarrow[\text{No}]{\text{Yes}}$ New, Q:Old $\xleftrightarrow[\text{Yes}]{\text{No}}$ New, R:Old $\xleftrightarrow[\text{Yes}]{\text{Yes}}$ New, S:Old $\xleftrightarrow[\text{No}]{\text{No}}$ New, W:Add, Z:Discontinued, F:Interchangeable by set, K:Q'ty Change

Copyright (C) 2014 YANMAR CO., LTD. All RightsReserved.

Fig.57. P.T.O. CLUTCH

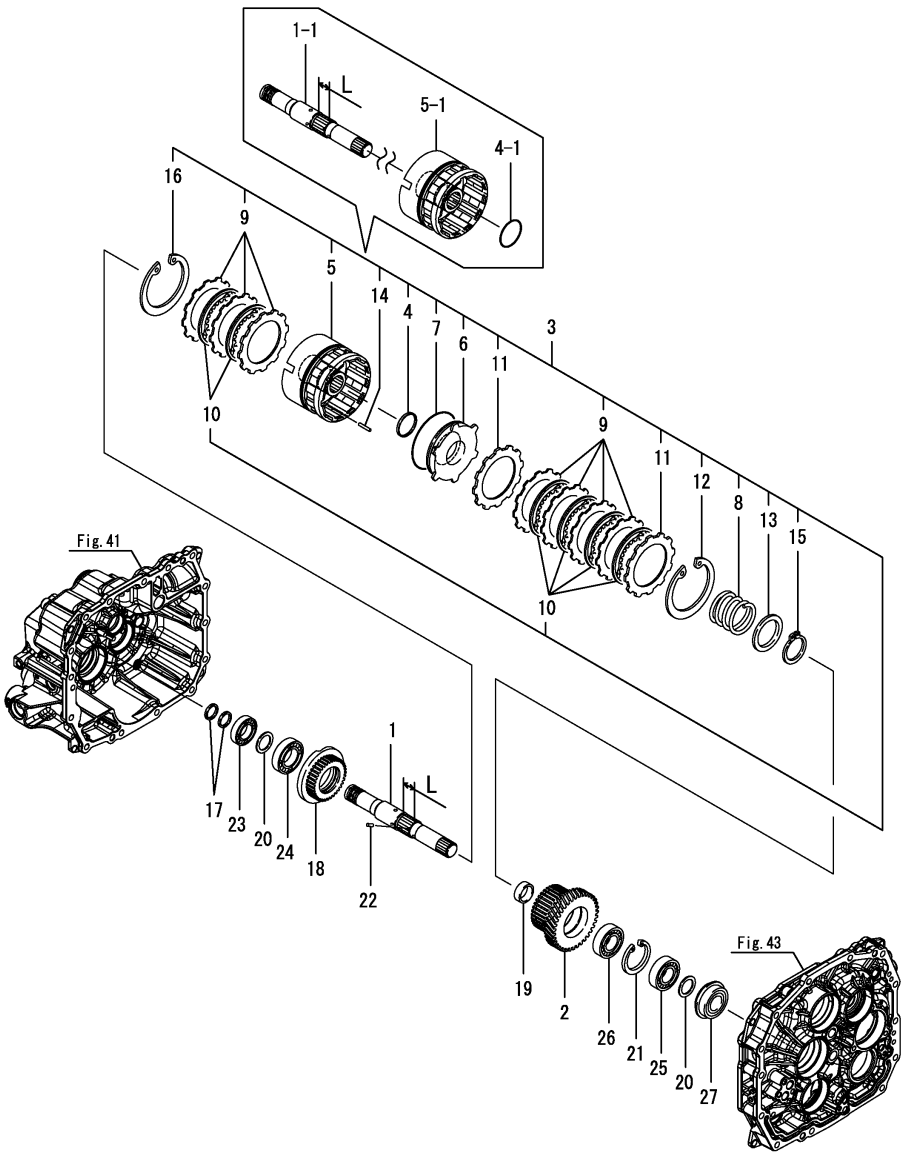

(A)=EG326Y (D)=EG334Y
(B)=EG328Y (E)=
(C)=EG330Y (F)=

No.	Lev.	Parts No.	Description	Q'ty (A)	(B)	(C)	(D)	(E)	(F)	I	R
1	1	1A7180-26000	SHAFT ASSY, CLUTCH	1	1	1	1				
1-1	1	1A7180-26001	SHAFT CMP,CLUTCH	1	1	1	1			S	1
	(A=F090103)	(B=F080104)	(C=F070104) (D=F060104)								
2	1	1A7180-26010	GEAR, CLUTCH 39	1	1	1	1				
3	1	1A7140-26110	CLUTCH, PTO	1	1	1	1				
3-1	1	1A7140-26111	CLUTCH,PTO	1	1	1	1			S	
	(A=F090103)	(B=F080104)	(C=F070104) (D=F060104)								
4	2	1A7180-21230	RING, SEAL	1	1	1	1				
4-1	2	1A7180-26140	PACKING,19033	1	1	1	1			S	
	(A=F090103)	(B=F080104)	(C=F070104) (D=F060104)								
5	2	1A7140-26120	CASE, CLUTCH	1	1	1	1				
5-1	2	1A7140-26121	CASE, CLUTCH	1	1	1	1			S	
	(A=F090103)	(B=F080104)	(C=F070104) (D=F060104)								
6	2	1A7180-26130	PISTON	1	1	1	1				
7	2	1A7351-26730	RING, 92	1	1	1	1				
8	2	1A7351-26740	SPRING	1	1	1	1				
9	2	1A7351-26750	PLATE, STEEL 2.0	7	7	7	7				
10	2	1A7351-26760	PLATE, DISK 2.0	6	6	6	6				
11	2	1A7351-26770	PLATE, STEEL 4.0	2	2	2	2				
12	2	1A7351-26780	RING, C102	1	1	1	1				
13	2	1A7351-26790	WASHER	1	1	1	1				
14	2	1A7351-26800	PIN	3	3	3	3				
15	2	1A6240-26830	CIRCLIP, C40 SHAFT	1	1	1	1				
16	2	22252-001000	RING, 100	1	1	1	1				
17	1	198167-26240	RING, SEAL 21X25X3	2	2	2	2				
18	1	1A7180-26250	GEAR, BRAKE	1	1	1	1				
19	1	1A6750-26290	COLLAR, SHAFT	1	1	1	1				
20	1	194190-26840	SPACER, 25X35X1.6	2	2	2	2				
21	1	22252-000520	RING, 52	1	1	1	1				
22	1	22351-030008	PIN, SPRING 3.0X 8	1	1	1	1				
23	1	24101-060054	BEARING, BALL 6005	1	1	1	1				
24	1	24101-060064	BEARING, BALL 6006	1	1	1	1				
25	1	24101-062054	BEARING, BALL 6205	1	1	1	1				
26	1	24107-062054	BEARING, BALL 6205ZZ	1	1	1	1				
27	1	24121-063054	BEARING, BALL 6305NR	1	1	1	1				

Remarks
(1)L=No.1 : 25.5mm, No.1-1 : 29.5mm

N:Old $\xleftarrow[\text{No}]{\text{Yes}}$ New, Q:Old $\xleftarrow[\text{Yes}]{\text{No}}$ New, R:Old $\xleftarrow[\text{Yes}]{\text{Yes}}$ New, S:Old $\xleftarrow[\text{No}]{\text{No}}$ New, W:Add, Z:Discontinued, F:Interchangeable by set, K:Q'ty Change

Copyright (C) 2014 YANMAR CO., LTD. All RightsReserved.

Fig.58. P.T.O. DRIVE SHAFT

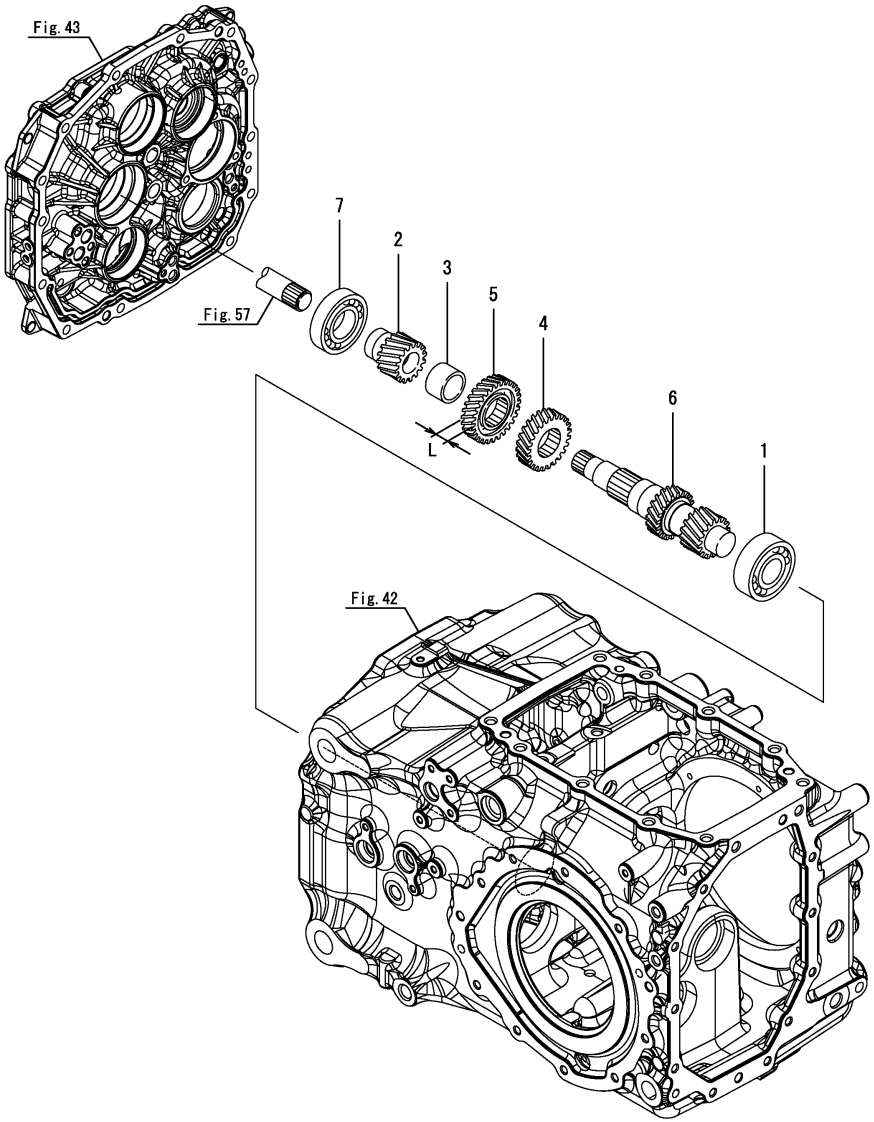

(A)=EG326Y (D)=EG334Y
(B)=EG328Y (E)=
(C)=EG330Y (F)=

No.	Lev.	Parts No.	Description	Q'ty (A)	(B)	(C)	(D)	(E)	(F)	I	R
1	1	194197-25810	BEARING, BALL TMB306	1	1	1	1				
2	1	1A7180-26210	PINION, PTO Z=14	1	1	1	1				
3	1	1A7180-26220	COLLAR	1	1	1	1				
3-1	1	1A6770-25030	COLLAR, 31X38X24	1	1	1	1			F	1
	(A=F100008)	(B=F200001)	(C=F300001) (D=F400004)								
4	1	1A7180-26230	PINION, PTO Z=23	1	1	1	1				
5	1	1A7180-26240	PINION, PTO	1	1	1	1				
5-1	1	1A7180-26241	PINION, PTO 26	1	1	1	1			F	1
	(A=F100008)	(B=F200001)	(C=F300001) (D=F400004)								
6	1	1A7180-26350	SHAFT, PTO PINION	1	1	1	1				
7	1	24101-062074	BEARING, BALL 6207	1	1	1	1				

Remarks
(1)Interchangeable by simultaneous replacement with No.3-1 & 5-1.
L=No.5 : 16.5mm, No.5-1 : 16.7mm.

N:Old $\xleftrightarrow[\text{No}]{\text{Yes}}$ New, Q:Old $\xleftrightarrow[\text{Yes}]{\text{No}}$ New, R:Old $\xleftrightarrow[\text{Yes}]{\text{Yes}}$ New, S:Old $\xleftrightarrow[\text{No}]{\text{No}}$ New, W:Add, Z:Discontinued, F:Interchangeable by set, K:Q'ty Change

Copyright (C) 2014 YANMAR CO., LTD. All RightsReserved.

Fig.59. P.T.O. DRIVEN SHAFT

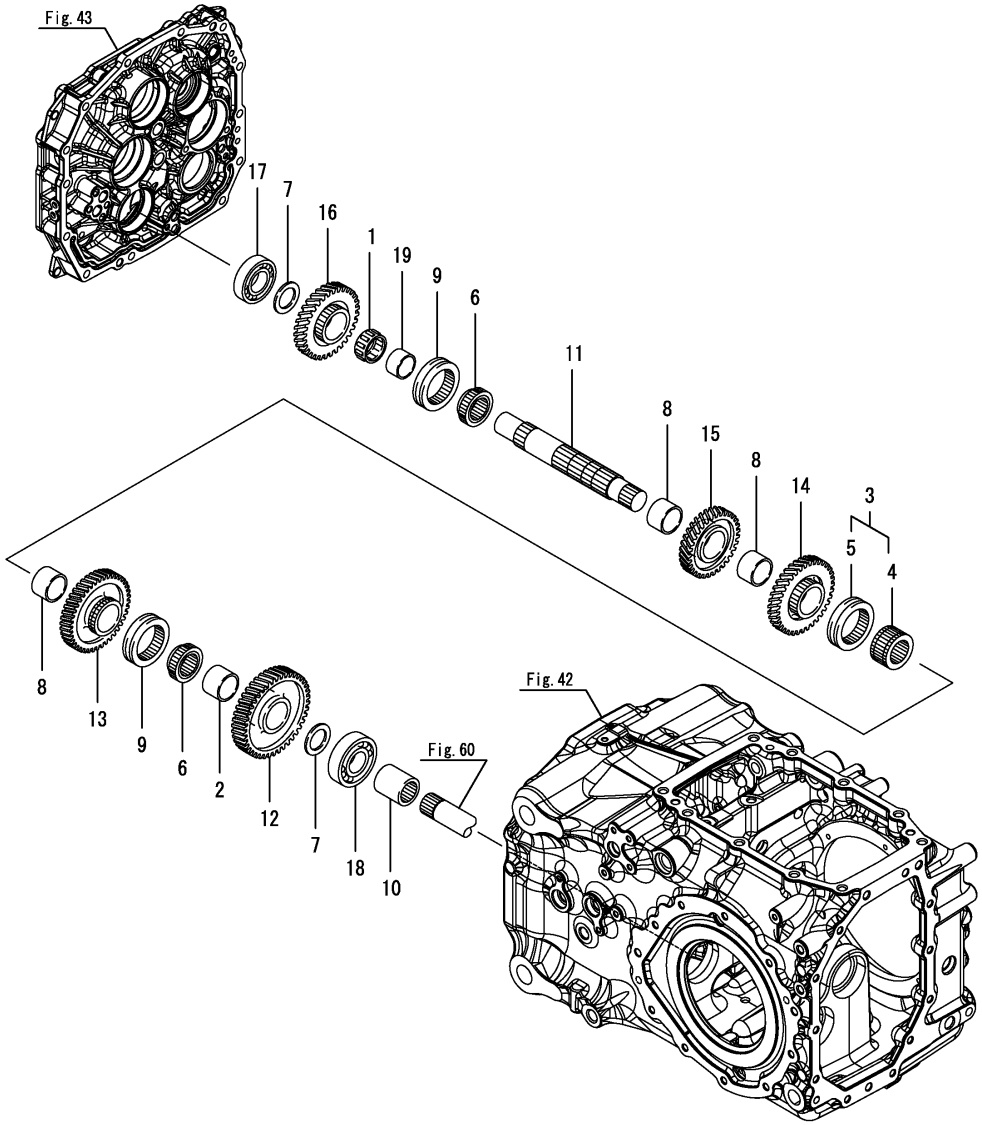

(A)=EG326Y (B)=EG328Y (C)=EG330Y (D)=EG334Y (E)= (F)=

No.	Lev.	Parts No.	Description	Q'ty (A)	(B)	(C)	(D)	(E)	(F)	I	R
1	1	194250-25240	BEARING, 354019	1	1	1	1				
2	1	198217-25680	BUSH, 34X40X28	1	1	1	1				
3	1	198149-25700	COLLAR ASSY, SPLINE	1	1	1	1				
4	2	198149-25780	COLLAR, SPLINE A	1	1	1	1				
5	2	198149-25890	SHIFTER	1	1	1	1				
6	1	198149-25790	COLLAR, SPLINE B	2	2	2	2				
7	1	194640-25860	WASHER, 30X45X3	2	2	2	2				
8	1	198133-25860	BUSH, 34X40X26	3	3	3	3				
9	1	198149-25890	SHIFTER	2	2	2	2				
10	1	194640-26130	COUPLING, PTO	1	1	1	1				
11	1	1A7180-26500	SHAFT, PTO SHIFT	1	1	1	1				
12	1	1A7180-26510	GEAR, PTO 44	1	1	1	1				
13	1	1A7180-26520	GEAR, PTO 42	1	1	1	1				
14	1	1A7180-26530	GEAR, PTO 38	1	1	1	1				
15	1	1A7180-26540	GEAR, PTO 33	1	1	1	1				
16	1	1A7180-26550	GEAR, PTO 33	1	1	1	1				
17	1	24101-062064	BEARING, BALL 6206	1	1	1	1				
18	1	24101-063064	BEARING, BALL 6306	1	1	1	1				
19	1	24163-305200	RING, INNER 303520	1	1	1	1				

N:Old $\xleftarrow[\text{No}]{\text{Yes}}$ New, Q:Old $\xleftarrow[\text{Yes}]{\text{No}}$ New, R:Old $\xleftarrow[\text{Yes}]{\text{Yes}}$ New, S:Old $\xleftarrow[\text{No}]{\text{No}}$ New, W:Add, Z:Discontinued, F:Interchangeable by set, K:Q'ty Change

Copyright (C) 2014 YANMAR CO., LTD. All RightsReserved.

Fig.60. P.T.O. FINAL PINION

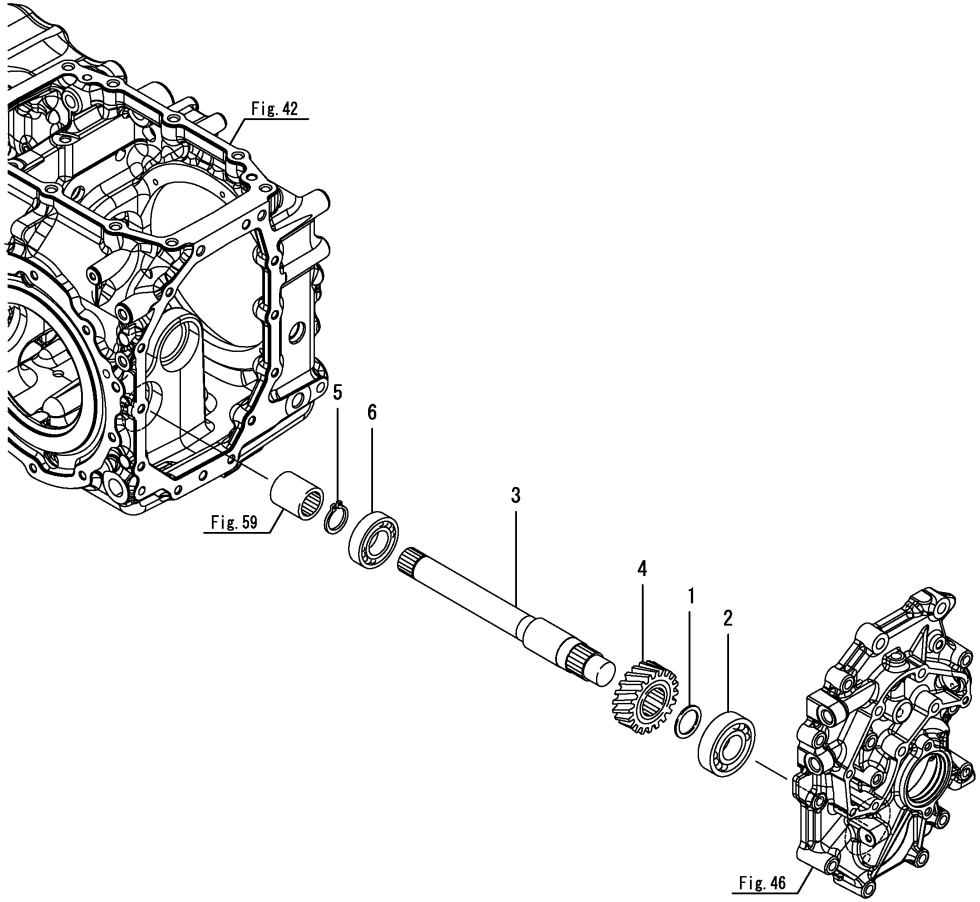

(A)=EG326Y (D)=EG334Y
(B)=EG328Y (E)=
(C)=EG330Y (F)=

No.	Lev.	Parts No.	Description	Q'ty (A)	(B)	(C)	(D)	(E)	(F)	I	R
1	1	194312-25470	SPACER, 30X40X2	1	1						
2	1	194197-25810	BEARING, BALL TMB306	1	1						
3	1	1A7180-26380	SHAFT, PTO DRIVE	1	1						
4	1	1A7140-26410	PINION, PTO Z=19	1	1						
5	1	22242-000300	RING, 30	1	1						
6	1	24101-062064	BEARING, BALL 6206	1	1						

N:Old $\xleftrightarrow[\text{No}]{\text{Yes}}$ New, Q:Old $\xleftrightarrow[\text{Yes}]{\text{No}}$ New, R:Old $\xleftrightarrow[\text{Yes}]{\text{Yes}}$ New, S:Old $\xleftrightarrow[\text{No}]{\text{No}}$ New, W:Add, Z:Discontinued, F:Interchangeable by set, K:Q'ty Change

Copyright (C) 2014 YANMAR CO., LTD. All RightsReserved.

Fig.61. P.T.O. FINAL PINION

(A)=EG326Y
(B)=EG328Y
(C)=EG330Y
(D)=EG334Y
(E)=
(F)=

No.	Lev.	Parts No.	Description	Q'ty (A)	(B)	(C)	(D)	(E)	(F)	I	R
1	1	194312-25470	SPACER, 30X40X2			1	1				
2	1	194197-25810	BEARING, BALL TMB306			1	1				
3	1	1A7180-26380	SHAFT, PTO DRIVE			1	1				
4	1	1A7180-26410	PINION, PTO Z=19			1	1				
5	1	22242-000300	RING, 30			1	1				
6	1	24101-062064	BEARING, BALL 6206			1	1				

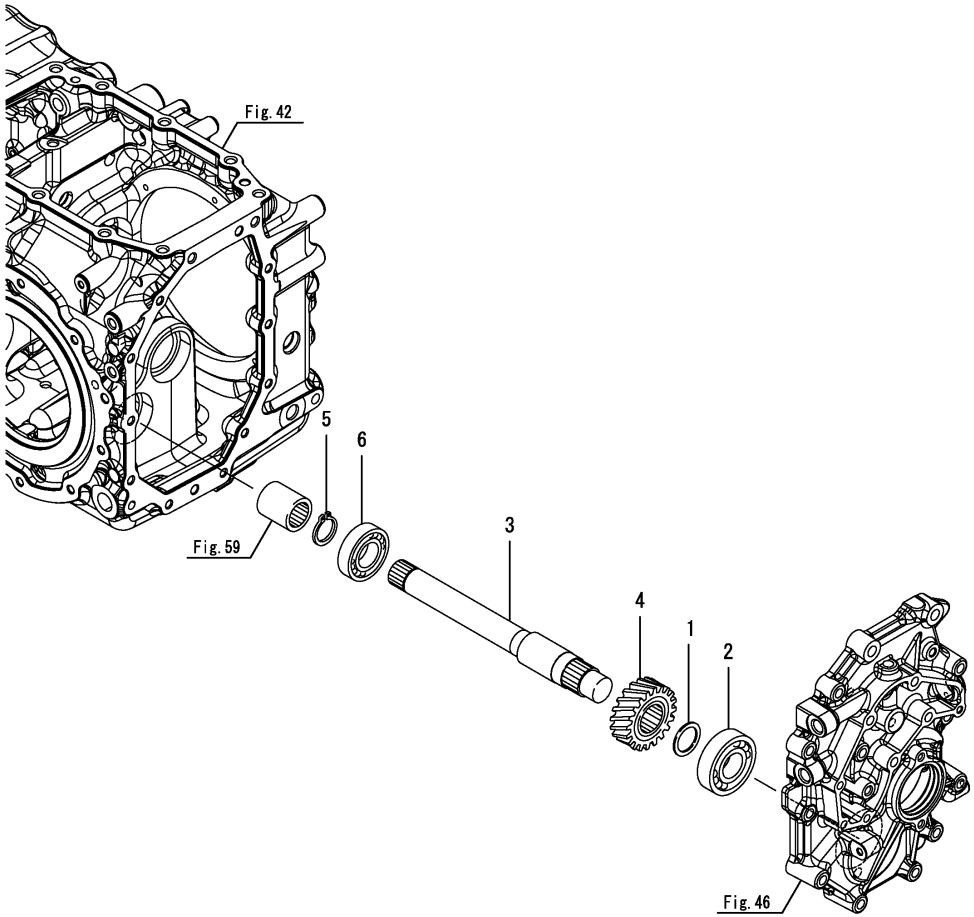

N:Old $\xleftarrow[\text{No}]{\text{Yes}}$ New, Q:Old $\xleftarrow[\text{Yes}]{\text{No}}$ New, R:Old $\xleftarrow[\text{Yes}]{\text{Yes}}$ New, S:Old $\xleftarrow[\text{No}]{\text{No}}$ New, W:Add, Z:Discontinued, F:Interchangeable by set, K:Q'ty Change

Copyright (C) 2014 YANMAR CO., LTD. All RightsReserved.

Fig.62. P.T.O. SHAFT

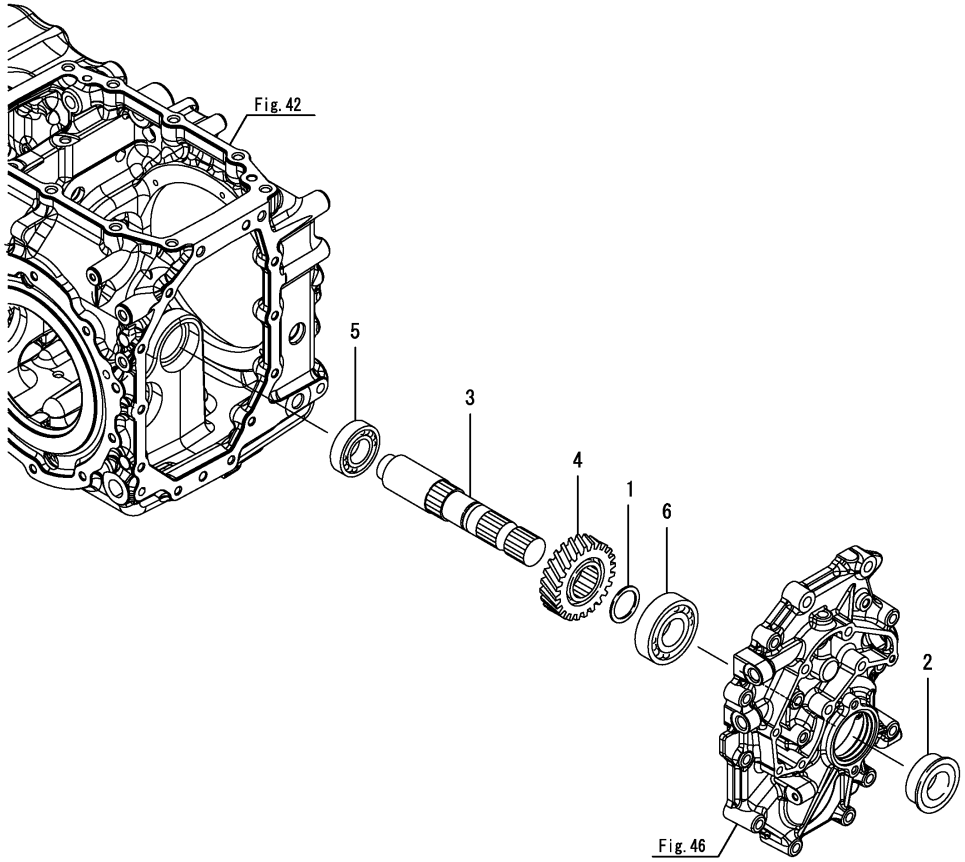

(A)=EG326Y (D)=EG334Y
(B)=EG328Y (E)=
(C)=EG330Y (F)=

No.	Lev.	Parts No.	Description	Q'ty (A)	(B)	(C)	(D)	(E)	(F)	I	R
1	1	194464-22160	SPACER, 35.5X45X2	1	1						
2	1	194370-26350	SEAL, OIL QLF356019	1	1						
3	1	1A7180-26390	SHAFT, PTO	1	1						
4	1	1A7140-26420	GEAR, PTO 23	1	1						
5	1	24101-062064	BEARING, BALL 6206	1	1						
6	1	24101-063074	BEARING, BALL 6307	1	1						

N:Old $\xleftrightarrow[\text{No}]{\text{Yes}}$ New, Q:Old $\xleftrightarrow[\text{Yes}]{\text{No}}$ New, R:Old $\xleftrightarrow[\text{Yes}]{\text{Yes}}$ New, S:Old $\xleftrightarrow[\text{No}]{\text{No}}$ New, W:Add, Z:Discontinued, F:Interchangeable by set, K:Q'ty Change

Copyright (C) 2014 YANMAR CO., LTD. All RightsReserved.

Fig.63. P.T.O. SHAFT

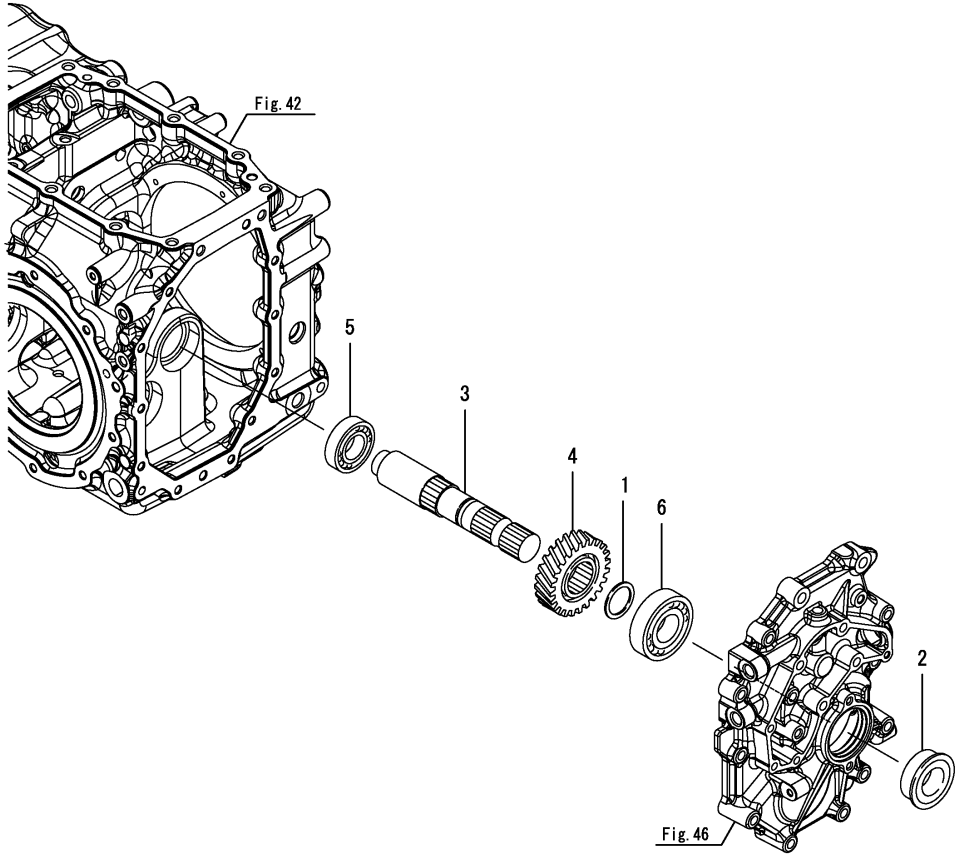

(A)=EG326Y (D)=EG334Y
(B)=EG328Y (E)=
(C)=EG330Y (F)=

No.	Lev.	Parts No.	Description	Q'ty (A)	(B)	(C)	(D)	(E)	(F)	I	R
1	1	194464-22160	SPACER, 35.5X45X2			1	1				
2	1	194370-26350	SEAL, OIL QLF356019			1	1				
3	1	1A7180-26390	SHAFT, PTO			1	1				
4	1	1A7180-26420	GEAR, PTO 24			1	1				
5	1	24101-062064	BEARING, BALL 6206			1	1				
6	1	24101-063074	BEARING, BALL 6307			1	1				

N:Old $\frac{\text{Yes}}{\text{No}}$ New, Q:Old $\frac{\text{No}}{\text{Yes}}$ New, R:Old $\frac{\text{Yes}}{\text{Yes}}$ New, S:Old $\frac{\text{No}}{\text{No}}$ New, W:Add, Z:Discontinued, F:Interchangeable by set, K:Q'ty Change

Copyright (C) 2014 YANMAR CO., LTD. All RightsReserved.

Fig.64. P.T.O. IDLE GEAR

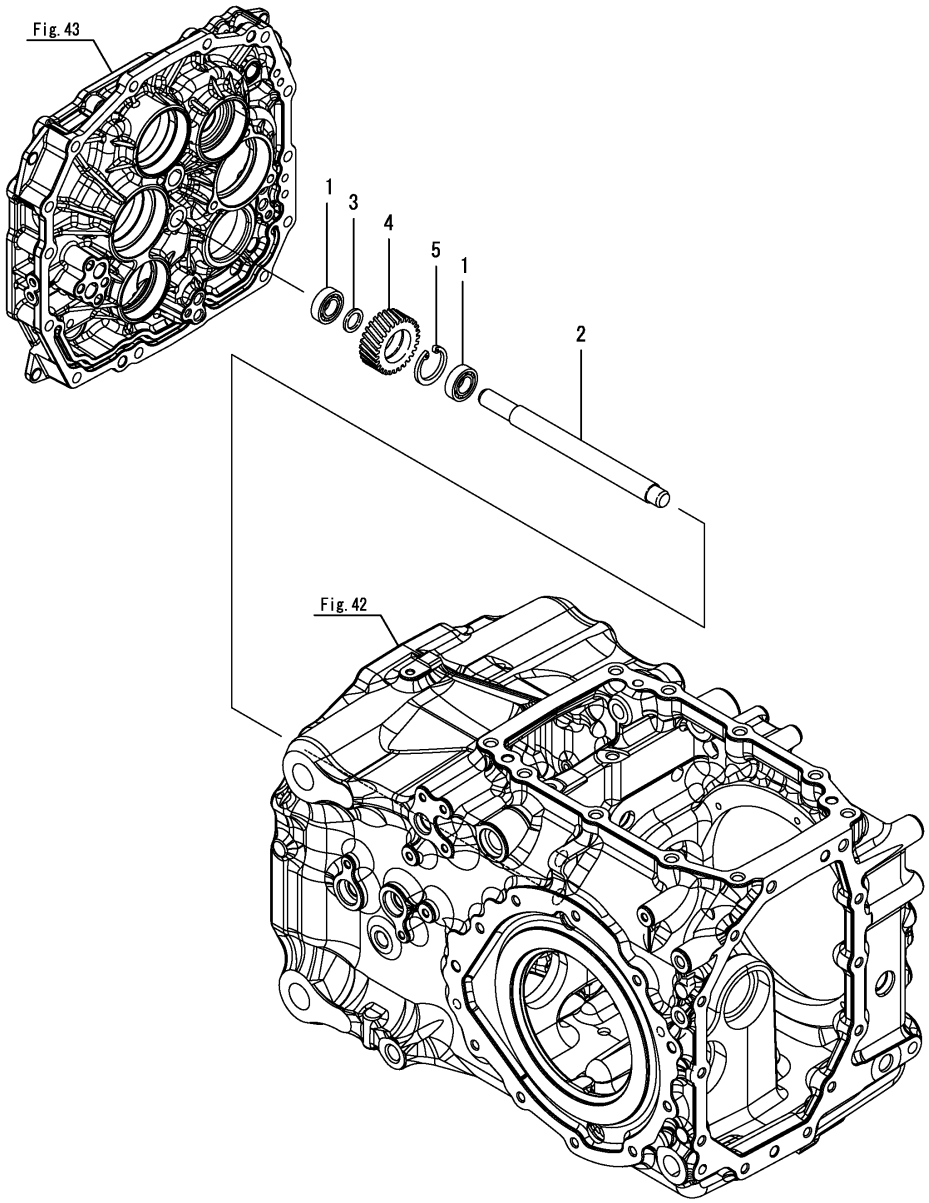

(A)=EG326Y (D)=EG334Y
(B)=EG328Y (E)=
(C)=EG330Y (F)=

No.	Lev.	Parts No.	Description	Q'ty (A)	(B)	(C)	(D)	(E)	(F)	I	R
1	1	1C6650-13030	BEARING, BALL TMB003	2	2	2	2				
2	1	1A7180-25260	SHAFT, REVERSE IDLE	1	1	1	1				
3	1	194197-25930	WASHER, 17X24X1.6	1	1	1	1				
4	1	1A7180-26310	GEAR, IDLE 17	1	1	1	1				
5	1	22252-000350	RING, 35	1	1	1	1				

N:Old $\xleftrightarrow[\text{No}]{\text{Yes}}$ New, Q:Old $\xleftrightarrow[\text{Yes}]{\text{No}}$ New, R:Old $\xleftrightarrow[\text{Yes}]{\text{Yes}}$ New, S:Old $\xleftrightarrow[\text{No}]{\text{No}}$ New, W:Add, Z:Discontinued, F:Interchangeable by set, K:Q'ty Change

Copyright (C) 2014 YANMAR CO., LTD. All RightsReserved.

Fig.65. P.T.O. SHAFT COVER

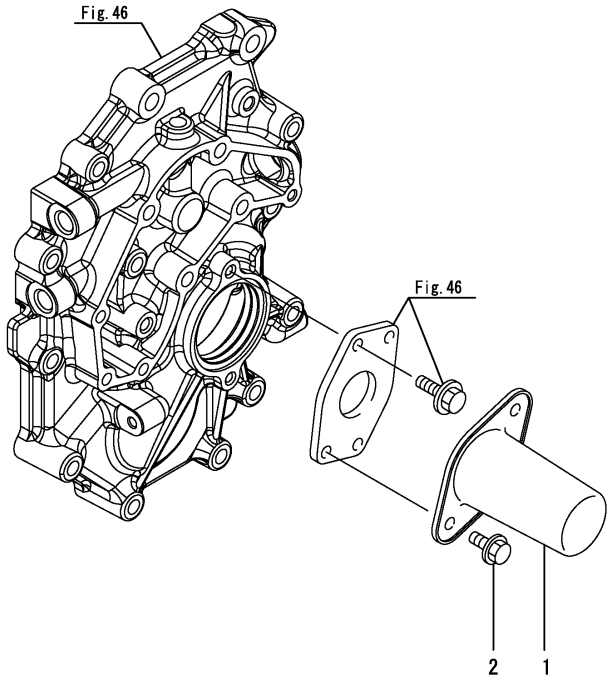

(A)=EG326Y (D)=EG334Y
(B)=EG328Y (E)=
(C)=EG330Y (F)=

No.	Lev.	Parts No.	Description	Q'ty (A)	(B)	(C)	(D)	(E)	(F)	I	R
1	1	198290-26850	COVER ASSY, SHAFT M	1	1	1	1				
2	1	26106-080122	BOLT, M8X 12 PLATED	2	2	2	2				

N:Old $\xleftarrow[\text{No}]{\text{Yes}}$ New, Q:Old $\xleftarrow[\text{Yes}]{\text{No}}$ New, R:Old $\xleftarrow[\text{Yes}]{\text{Yes}}$ New, S:Old $\xleftarrow[\text{No}]{\text{No}}$ New, W:Add, Z:Discontinued, F:Interchangeable by set, K:Q'ty Change

Copyright (C) 2014 YANMAR CO., LTD. All RightsReserved.

Fig.66. P.T.O. SHAFT GUARD

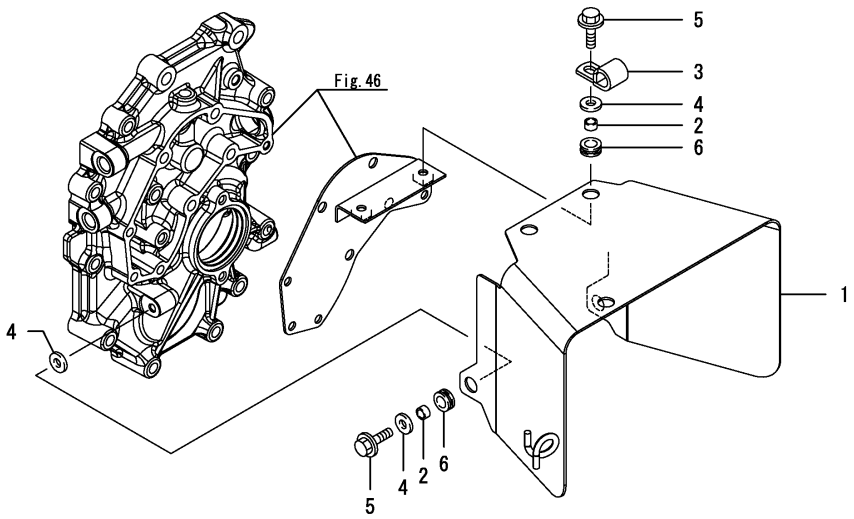

(A)=EG326Y (D)=EG334Y
(B)=EG328Y (E)=
(C)=EG330Y (F)=

No.	Lev.	Parts No.	Description	Q'ty (A)	(B)	(C)	(D)	(E)	(F)	I	R
1	1	1A7180-26900	GUARD ASSY, PTO M	1	1	1	1				
2	1	1C6215-81681	COLLAR, 8.8X12X6.5	4	4	4	4				
3	1	1E6213-83410	CLIP, HARNESS 18	1	1	1	1				
4	1	22157-080000	WASHER, 8	6	6	6	6				
5	1	26106-080252	BOLT, M8X 25 PLATED	4	4	4	4				
6	1	29311-124000	GROMET, 12.0X4	4	4	4	4				

N:Old $\overset{\text{Yes}}{\underset{\text{No}}{\leftrightarrow}}$ New, Q:Old $\overset{\text{No}}{\underset{\text{Yes}}{\leftrightarrow}}$ New, R:Old $\overset{\text{Yes}}{\underset{\text{Yes}}{\leftrightarrow}}$ New, S:Old $\overset{\text{No}}{\underset{\text{No}}{\leftrightarrow}}$ New, W:Add, Z:Discontinued, F:Interchangeable by set, K:Q'ty Change

Copyright (C) 2014 YANMAR CO., LTD. All RightsReserved.

Fig.67. MAIN SHIFT LEVER

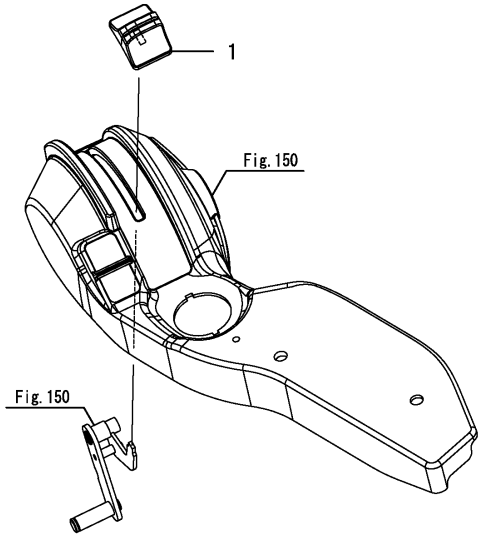

(A)=EG326Y (D)=EG334Y
(B)=EG328Y (E)=
(C)=EG330Y (F)=

No.	Lev.	Parts No.	Description	Q'ty (A)	(B)	(C)	(D)	(E)	(F)	I	R
1	1	1A7180-27250	KNOB, LEVER	1	1	1	1				

N:Old ◄Yes/No► New, Q:Old ◄No/Yes► New, R:Old ◄Yes/Yes► New, S:Old ◄No/No► New, W:Add, Z:Discontinued, F:Interchangeable by set, K:Q'ty Change

Copyright (C) 2014 YANMAR CO., LTD. All RightsReserved.

Fig.68. SUB SHIFT

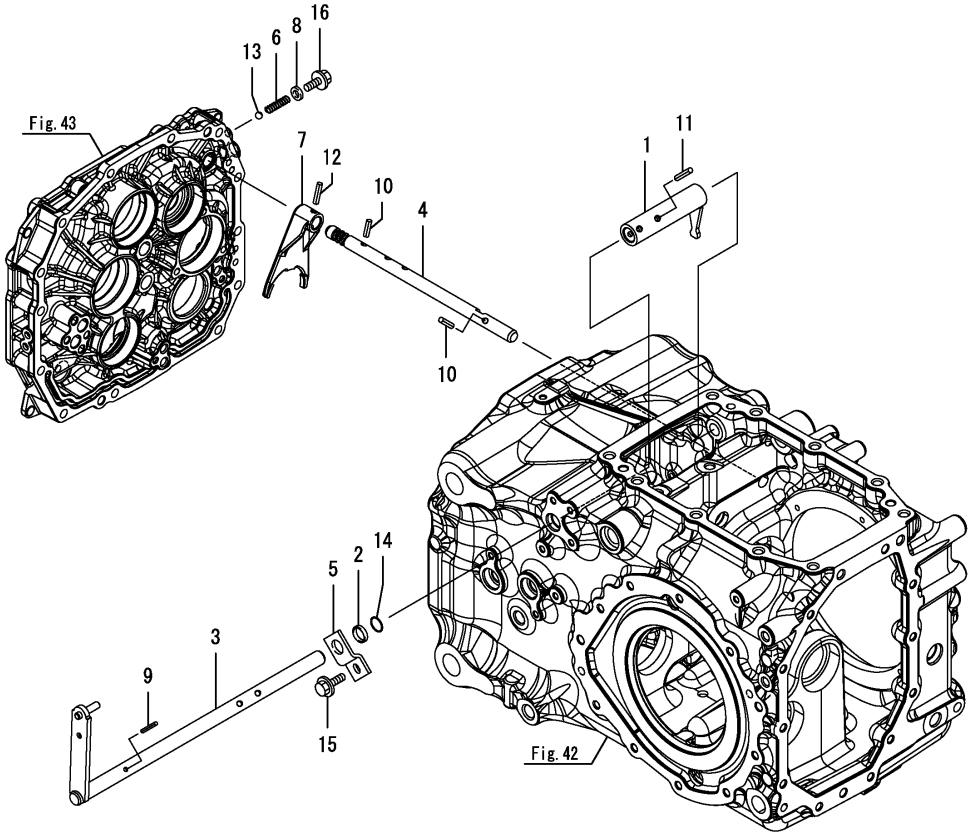

(A)=EG326Y (D)=EG334Y
(B)=EG328Y (E)=
(C)=EG330Y (F)=

No.	Lev.	Parts No.	Description	Q'ty (A)	(B)	(C)	(D)	(E)	(F)	I	R
1	1	1A7180-27050	ARM, SHIFT	1	1	1	1				
2	1	198119-27150	COLLAR, ARM	1	1	1	1				
3	1	1A7180-27150	SHAFT, RANGE SHIFT	1	1	1	1				
4	1	1A7180-27190	SHAFT, RANGE FORK	1	1	1	1				
5	1	198448-27470-1	PLATE, KEEP	1	1	1	1			Z	
	(A=F100008)	(B=F200001)	(C=F300001) (D=F400004)								
6	1	194680-27540	SPRING, FORK LOCK	1	1	1	1				
7	1	1A7180-27630	FORK, RANGE SHIFT	1	1	1	1				
8	1	22190-080000	WASHER, SEAL 8	1	1	1	1				
9	1	22351-040032	PIN, SPRING 4.0X32	1	1	1	1				
10	1	22351-060025	PIN, SPRING 6.0X25	2	2	2	2				
11	1	22351-060032	PIN, SPRING 6.0X32	1	1	1	1				
12	1	22351-060032	PIN, SPRING 6.0X32	1	1	1	1				
13	1	24190-080001	BALL, STEEL 1/4	1	1	1	1				
14	1	24311-000160	O-RING, 1AP16.0	1	1	1	1				
15	1	26106-080162	BOLT, M8X 16 PLATED	1	1	1	1			Z	
	(A=F100008)	(B=F200001)	(C=F300001) (D=F400004)								
16	1	26106-080162	BOLT, M8X 16 PLATED	1	1	1	1				

N:Old $\frac{\text{Yes}}{\text{No}}$ New, Q:Old $\frac{\text{No}}{\text{Yes}}$ New, R:Old $\frac{\text{Yes}}{\text{Yes}}$ New, S:Old $\frac{\text{No}}{\text{No}}$ New, W:Add, Z:Discontinued, F:Interchangeable by set, K:Q'ty Change

Copyright (C) 2014 YANMAR CO., LTD. All RightsReserved.

Fig.69. P.T.O. SHIFT

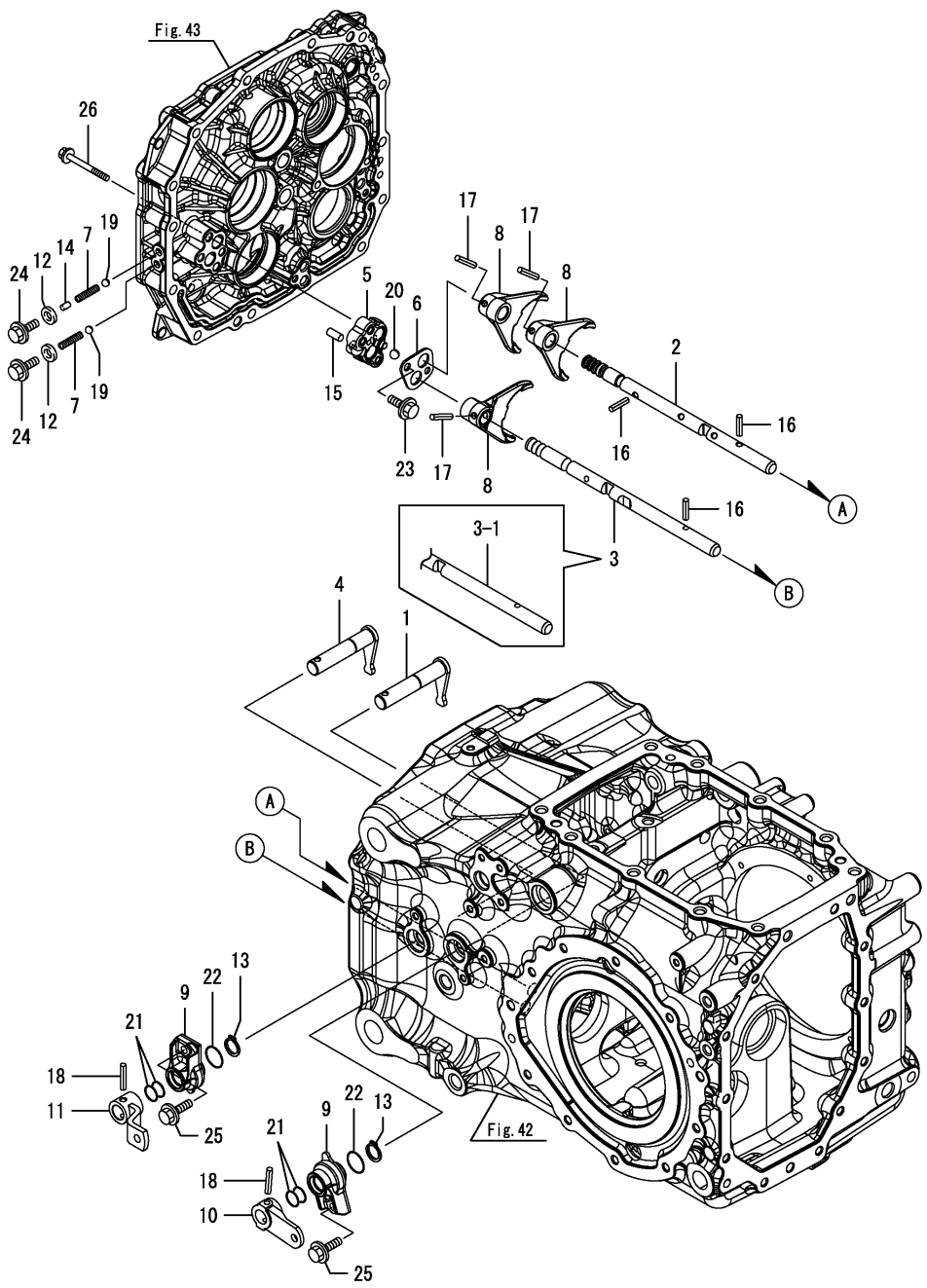

(A)=EG326Y (D)=EG334Y
(B)=EG328Y (E)=
(C)=EG330Y (F)=

No.	Lev.	Parts No.	Description	Q'ty (A)	(B)	(C)	(D)	(E)	(F)	I	R
1	1	1A7180-27010	ARM, SHIFT	1	1	1	1				
2	1	1A7180-27090	SHAFT, PTO FORK A	1	1	1	1				
3	1	1A7180-27130	SHAFT, PTO FORK B	1	1	1	1				
3-1	1	1A7180-27131	SHAFT, FORK PTO B	1	1	1	1			S	
	(A=F100008)	(B=F200001)	(C=F300001) (D=F400004)								
4	1	1A7180-27180	ARM, SHIFT	1	1	1	1				
5	1	1A7180-27380	HOLDER	1	1	1	1				
6	1	1A7180-27390	PLATE, FORK LOCK	1	1	1	1				
7	1	1A7180-27410	SPRING, FORK LOCK	2	2	2	2				
8	1	1A7180-27450	FORK, PTO SHIFT	3	3	3	3				
9	1	198071-27470-1	HOLDER, SHIFT ARM	2	2	2	2				
10	1	198072-27650-3	ARM, CHANGE	1	1	1	1				
11	1	1A7180-27880	ARM, CHANGE	1	1	1	1				
12	1	22190-080000	WASHER, SEAL 8	2	2	2	2				
13	1	22242-000170	RING, 17	2	2	2	2				
14	1	22312-060100	PIN, PARALLEL M6X10	1	1	1	1				
15	1	22312-080180	PIN, PARALLEL M8X18	2	2	2	2				
16	1	22351-060025	PIN, SPRING 6.0X25	3	3	3	3				
17	1	22351-060032	PIN, SPRING 6.0X32	3	3	3	3				
18	1	22351-060032	PIN, SPRING 6.0X32	2	2	2	2				
19	1	24190-080001	BALL, STEEL 1/4	2	2	2	2				
20	1	24190-100001	BALL, STEEL 5/16	1	1	1	1				
21	1	24311-000160	O-RING, 1AP16.0	4	4	4	4				
22	1	24321-000250	O-RING, 1AG25.0	2	2	2	2				
23	1	26106-080162	BOLT, M8X 16 PLATED	1	1	1	1				
24	1	26106-080162	BOLT, M8X 16 PLATED	2	2	2	2				
25	1	26106-080202	BOLT, M8X 20 PLATED	2	2	2	2				
26	1	26106-080602	BOLT, M8X 60 PLATED	2	2	2	2				

N:Old ◄Yes/No► New, Q:Old ◄No/Yes► New, R:Old ◄Yes/Yes► New, S:Old ◄No/No► New, W:Add, Z:Discontinued, F:Interchangeable by set, K:Q'ty Change

Copyright (C) 2014 YANMAR CO., LTD. All RightsReserved.

Fig.70. SUB SHIFT LEVER

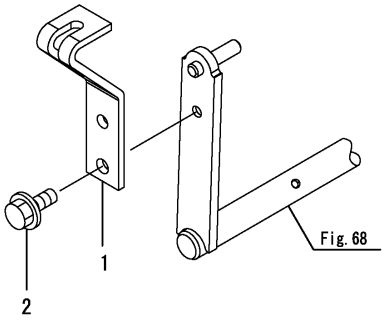

(A)=EG326Y (D)=EG334Y
(B)=EG328Y (E)=
(C)=EG330Y (F)=

No.	Lev.	Parts No.	Description	Q'ty (A)	(B)	(C)	(D)	(E)	(F)	I	R
1	1	1A7190-27600	LEVER, RANGE SHIFT	1	1	1	1				
2	1	26106-080122	BOLT, M8X 12 PLATED	1	1	1	1				

N:Old $\xleftrightarrow[\text{No}]{\text{Yes}}$ New, Q:Old $\xleftrightarrow[\text{Yes}]{\text{No}}$ New, R:Old $\xleftrightarrow[\text{Yes}]{\text{Yes}}$ New, S:Old $\xleftrightarrow[\text{No}]{\text{No}}$ New, W:Add, Z:Discontinued, F:Interchangeable by set, K:Q'ty Change

Copyright (C) 2014 YANMAR CO., LTD. All RightsReserved.

Fig.71. RANGE SHIFT LEVER(HIGH SPEED)

(A)=EG326Y
(B)=EG328Y
(C)=EG330Y
(D)=EG334Y
(E)=
(F)=

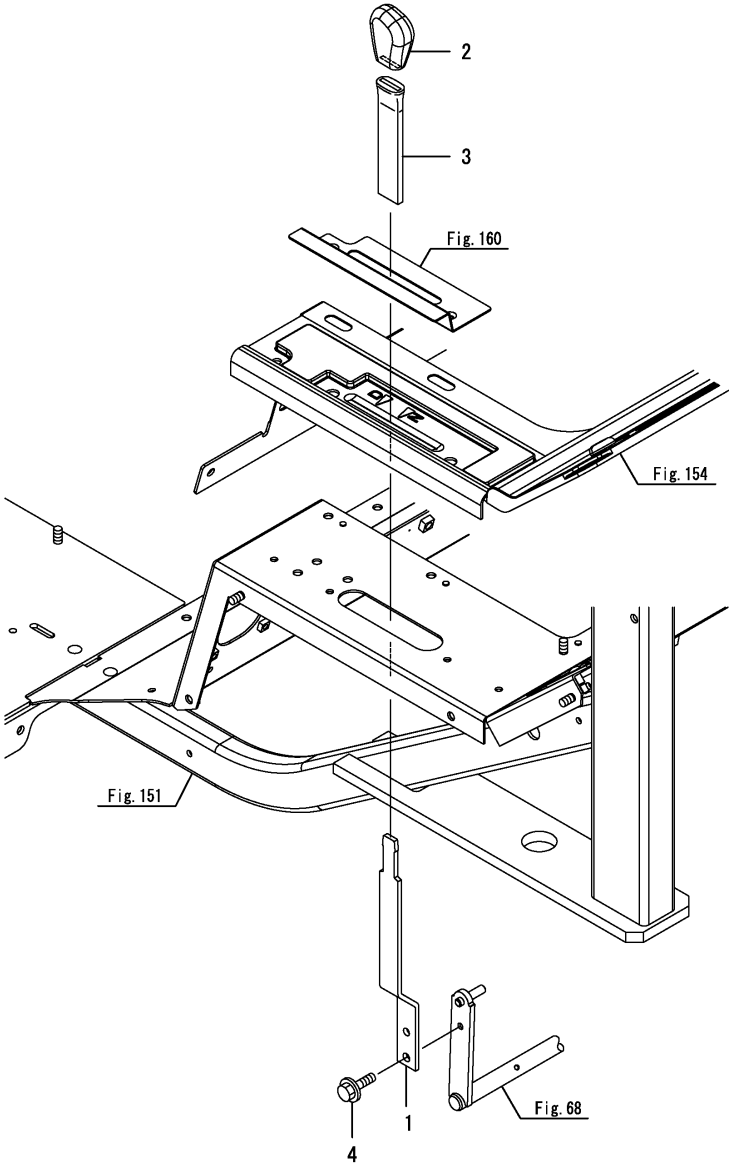

No.	Lev.	Parts No.	Description	Q'ty (A)	(B)	(C)	(D)	(E)	(F)	I	R
1	1	1A7180-27600	LEVER, RANGE SHIFT	1	1	1	1				
2	1	198200-27811	KNOB, ORANGE	1	1	1	1				
3	1	1A7940-27870	BOOT, SHAFT	1	1	1	1				
4	1	26106-080122	BOLT, M8X 12 PLATED	1	1	1	1				

N:Old $\xleftrightarrow[\text{No}]{\text{Yes}}$ New, Q:Old $\xleftrightarrow[\text{Yes}]{\text{No}}$ New, R:Old $\xleftrightarrow[\text{Yes}]{\text{Yes}}$ New, S:Old $\xleftrightarrow[\text{No}]{\text{No}}$ New, W:Add, Z:Discontinued, F:Interchangeable by set, K:Q'ty Change

Copyright (C) 2014 YANMAR CO., LTD. All RightsReserved.

Fig.72. P.T.O. LEVER(1)

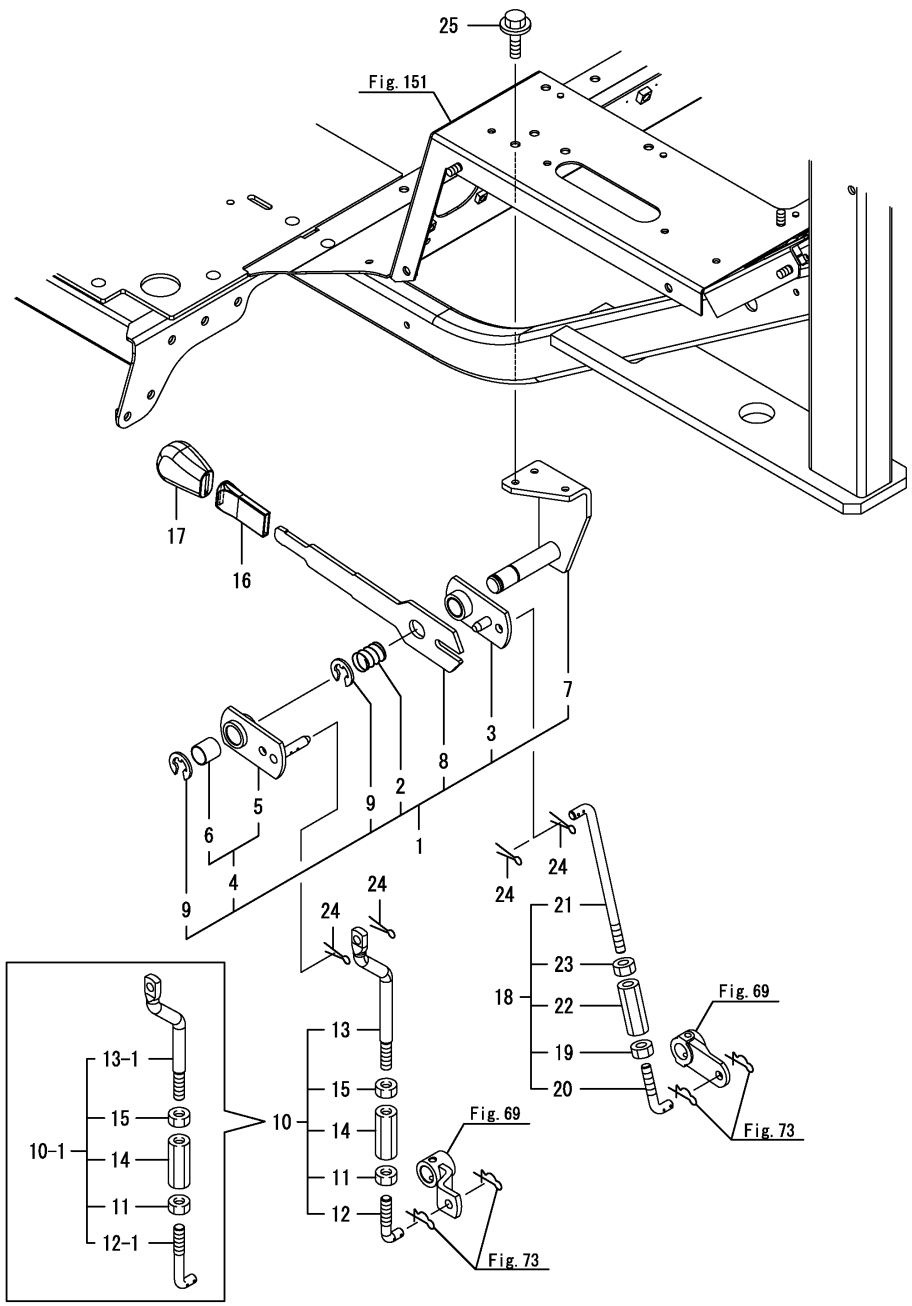

(A)=EG326Y (D)=EG334Y
(B)=EG328Y (E)=
(C)=EG330Y (F)=

No.	Lev.	Parts No.	Description	Q'ty (A)	(B)	(C)	(D)	(E)	(F)	I	R
1	1	1A7180-27701	LEVER, SHIFT	1	1	1	1				
2	2	194320-24930	SPRING, RETAINER	1	1	1	1				
3	2	1A7180-27710	LEVER, PTO A	1	1	1	1				
4	2	1A7180-27761	LEVER, PTO B	1	1	1	1				
5	3	1A7180-27771	LEVER, B	1	1	1	1				
6	3	24550-018200	BUSH, 18X20	1	1	1	1				
7	2	1A7180-27800	BRACKET, PTO LEVER	1	1	1	1				
8	2	1A7180-27910	LEVER, PTO CHANGE	1	1	1	1				
9	2	22272-000150	RING, E-15	2	2	2	2				
10	1	1A7180-27850	ROD KIT, PTO	1	1	1	1				
10-1	1	1A7180-27851	ROD B KIT, PTO-4-R	1	1	1	1				R
	(A=F090706)	(B=F080594)	(C=F071677) (D=F061533)								
11	2	194150-22480	NUT, M10 L	1	1	1	1				
12	2	194555-27450	ROD ASSY	1	1	1	1				
12-1	2	1A7180-27900	ROD, PTO CHANGE C	1	1	1	1				S
	(A=F090706)	(B=F080594)	(C=F071677) (D=F061533)								
13	2	1A7180-27870	ROD, PTO 4-R B	1	1	1	1				
13-1	2	1A7180-27871	ROD,PTO-4-R B	1	1	1	1				S
	(A=F090706)	(B=F080594)	(C=F071677) (D=F061533)								
14	2	194250-47490	TURNBUCKLE	1	1	1	1				
15	2	26716-100002	NUT, M10	1	1	1	1				
16	1	198273-27870	BOOT, SHAFT	1	1	1	1				
17	1	198200-27911	KNOB, YELLOW	1	1	1	1				
18	1	1A7180-27920	ROD KIT	1	1	1	1				
19	2	194150-22480	NUT, M10 L	1	1	1	1				
20	2	194555-27450	ROD ASSY	1	1	1	1				
21	2	1A7180-27930	ROD, PTO 1-2-3 A	1	1	1	1				
22	2	194250-47490	TURNBUCKLE	1	1	1	1				
23	2	26716-100002	NUT, M10	1	1	1	1				
24	1	22417-200200	PIN, COTTER 2.0X20	4	4	4	4				
25	1	26106-080122	BOLT, M8X 12 PLATED	3	3	3	3				

N:Old $\overset{\text{Yes}}{\underset{\text{No}}{\leftrightarrow}}$ New, Q:Old $\overset{\text{No}}{\underset{\text{Yes}}{\leftrightarrow}}$ New, R:Old $\overset{\text{Yes}}{\underset{\text{Yes}}{\leftrightarrow}}$ New, S:Old $\overset{\text{No}}{\underset{\text{No}}{\leftrightarrow}}$ New, W:Add, Z:Discontinued, F:Interchangeable by set, K:Q'ty Change

Copyright (C) 2014 YANMAR CO., LTD. All RightsReserved.

Fig.73. P.T.O. LEVER(2)

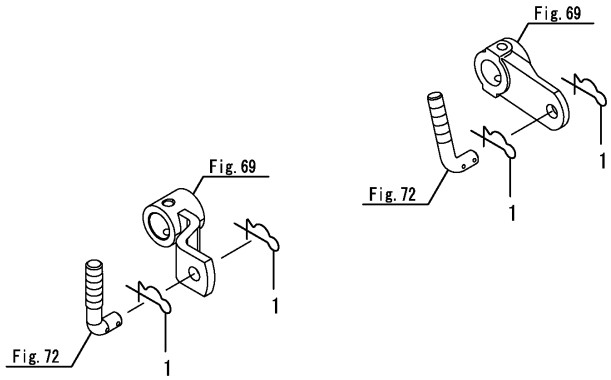

(A)=EG326Y
(B)=EG328Y
(C)=EG330Y
(D)=EG334Y
(E)=
(F)=

No.	Lev.	Parts No.	Description	Q'ty (A)	(B)	(C)	(D)	(E)	(F)	I	R
1	1	1C6281-52320	PIN, SNAP 8	4	4	4	4				

N:Old ◄Yes/No► New, Q:Old ◄No/Yes► New, R:Old ◄Yes/Yes► New, S:Old ◄No/No► New, W:Add, Z:Discontinued, F:Interchangeable by set, K:Q'ty Change

Copyright (C) 2014 YANMAR CO., LTD. All RightsReserved.

Fig.74. CONTROLLER(H.M.T.)

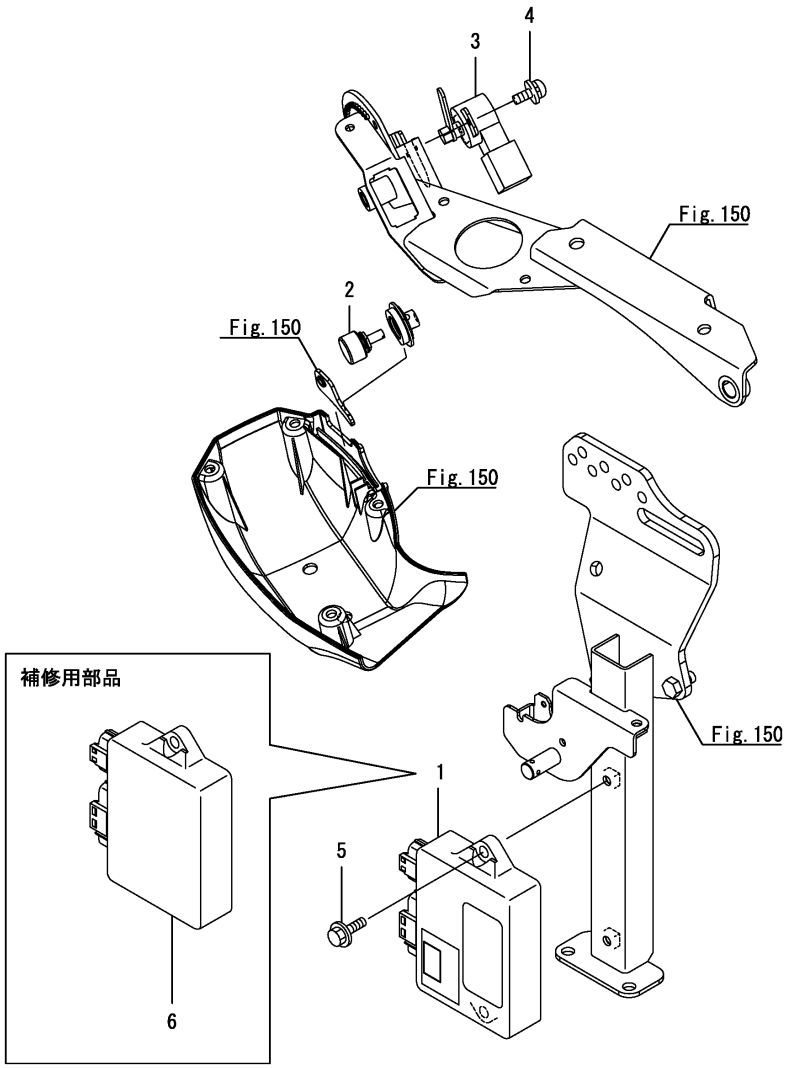

(A)=EG326Y (D)=EG334Y
(B)=EG328Y (E)=
(C)=EG330Y (F)=

No.	Lev.	Parts No.	Description	Q'ty (A)	(B)	(C)	(D)	(E)	(F)	I	R
1	1	1A8280-50102	CONTROLLER, HMT	1	1	1	1				1
1-1	1	1A8280-50103	CONTROL UNIT, HMT	1	1	1	1			N	1
	(A=F090101)	(B=F080101)	(C=F070101)	(D=F060101)							
1-2	1	1A8280-50104	CONTROL UNIT, HMT	1	1	1	1			N	1
	(A=F090245)	(B=F080222)	(C=F070488)	(D=F060471)							
1-3	1	1A8280-50105	CONTROL UNIT, HMT	1	1	1	1			N	
	(A=F090706)	(B=F080594)	(C=F071251)	(D=F061080)							
1-4	1	1A8280-50106	CONTROL UNIT, HMT	1	1	1	1			N	
	(A=F090706)	(B=F080594)	(C=F071677)	(D=F061187)							
1-5	1	1A8280-50107	CONTROL UNIT, HMT	1	1	1	1			N	
	(A=F090708)	(B=F080602)	(C=F071717)	(D=F061548)							
1-6	1	1A8280-50108	CONTROL UNIT, HMT	1	1	1	1			N	
	(A=F090843)	(B=F080699)	(C=F072065)	(D=F061902)							
2	1	1A7480-52340	VOLUME, 1.14K	1	1	1	1				
3	1	1A7180-52810	SENSOR, POTENTIO	1	1	1	1				
4	1	26023-040102	SCREW, M4X10	2	2	2	2				
5	1	26106-060202	BOLT, M6X 20 PLATED	2	2	2	2				
6	1	1A8280-50900	CONTROL-UNIT,SERVICE	1	1	1	1				2

Remarks
* Applied to the following models.
EG326, EG328, EG330, EG334
EG330A (Cabin specification), EG334A (Cabin specification)
(1)Eco Controler
This part cannot be ordered.
Replace the part using a Service controler with the proper tractor information installed.
(2)Service Controler
If the proper information is not installed, the tractor will not operate.
To install proper information, go to an authorized Distributor.

N:Old $\xleftrightarrow[\text{No}]{\text{Yes}}$ New, Q:Old $\xleftrightarrow[\text{Yes}]{\text{No}}$ New, R:Old $\xleftrightarrow[\text{Yes}]{\text{Yes}}$ New, S:Old $\xleftrightarrow[\text{No}]{\text{No}}$ New, W:Add, Z:Discontinued, F:Interchangeable by set, K:Q'ty Change

Copyright (C) 2014 YANMAR CO., LTD. All RightsReserved.

Fig.234. CONTROLLER(H.M.T.)(A,K,KW,KWA)

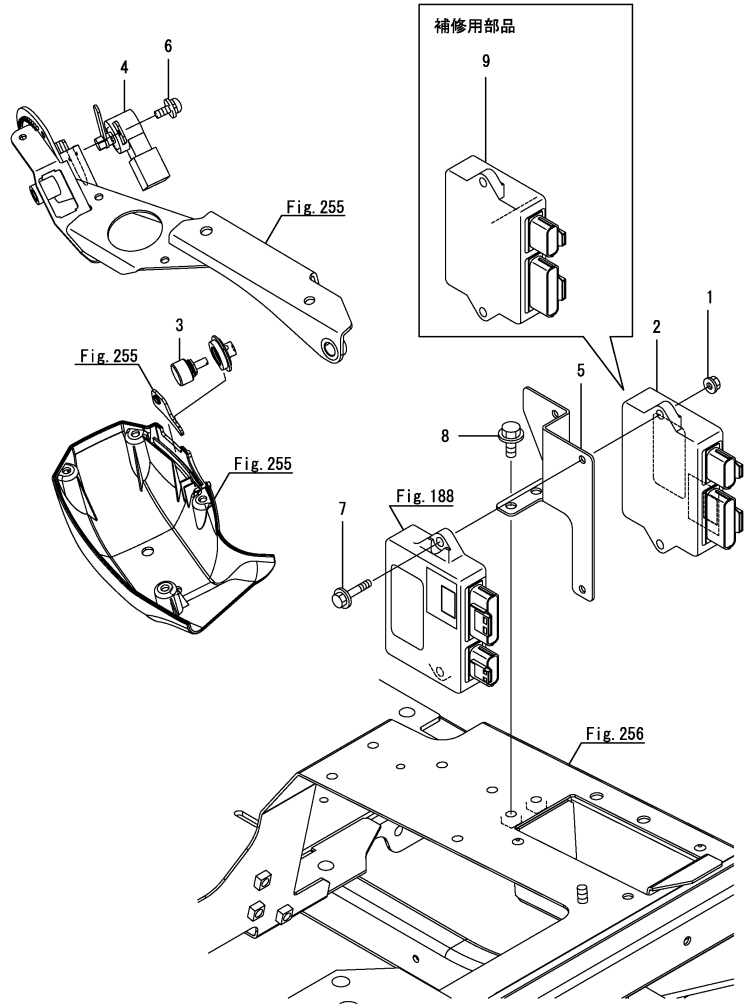

(A)=EG326Y (B)=EG328Y (C)=EG330Y (D)=EG334Y (E)= (F)=

No.	Lev.	Parts No.	Description	Q'ty (A)	(B)	(C)	(D)	(E)	(F)	I	R
1	1	194990-22130	NUT, M6			2	2				
2	1	1A8280-50103	CONTROL UNIT, HMT			1	1				1
2-2	1	1A8280-50105	CONTROL UNIT, HMT			1	1			N	
			(C=F071251) (D=F061080)								
2-3	1	1A8280-50106	CONTROL UNIT, HMT			1	1			N	
			(C=F071677) (D=F061187)								
2-4	1	1A8280-50107	CONTROL UNIT, HMT			1	1			N	
			(C=F071717) (D=F061548)								
2-5	1	1A8280-50108	CONTROL UNIT, HMT			1	1			N	
			(C=F072065) (D=F061902)								
3	1	1A7480-52340	VOLUME, 1.14K			1	1				
4	1	1A7180-52810	SENSOR, POTENTIO			1	1				
5	1	1A7160-63330	BRACKET, CONTROLLER			1	1				
6	1	26023-040102	SCREW, M4X10			2	2				
7	1	26106-060302	BOLT, M6X 30 PLATED			2	2				
8	1	26106-080162	BOLT, M8X 16 PLATED			2	2				
9	1	1A8280-50900	CONTROL-UNIT,SERVICE			1	1				2

Remarks
* Applied to the following models.
EG330A(Rops specification), EG330K, EG330KW, EG334A(Rops specification), EG334KW, EG334KWA
(1)Eco Controler
This part cannot be ordered.
Replace the part using a Service controler with the proper tractor information installed.
(2)Service Controler
If the proper information is not installed, the tractor will not operate.
To install proper information, go to an authorized Distributor.

N:Old ←Yes/No→ New, Q:Old ←No/Yes→ New, R:Old ←Yes/Yes→ New, S:Old ←No/No→ New, W:Add, Z:Discontinued, F:Interchangeable by set, K:Q'ty Change

Copyright (C) 2014 YANMAR CO., LTD. All RightsReserved.

Fig.75. SENSOR(TRANS MISSION)

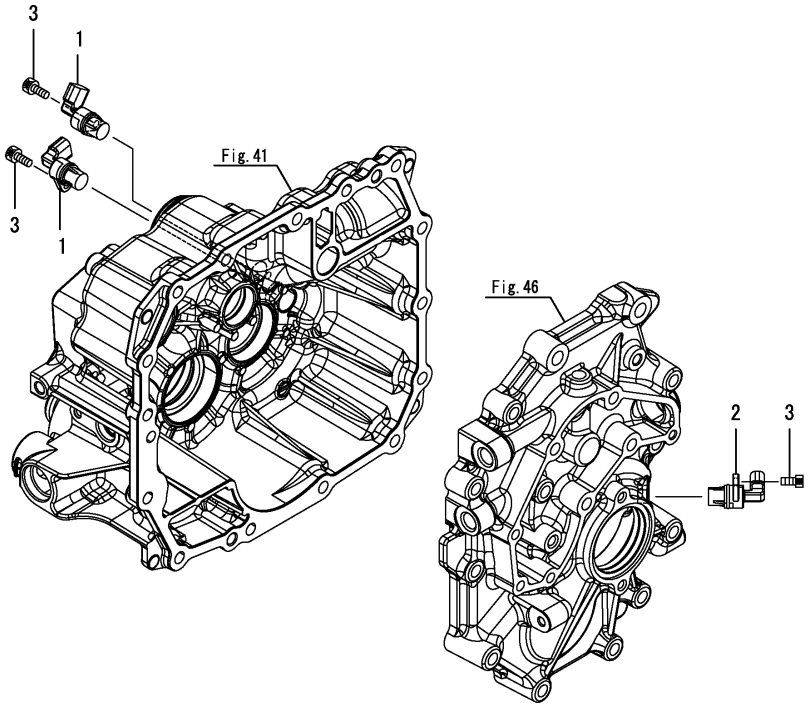

(A)=EG326Y
(B)=EG328Y
(C)=EG330Y
(D)=EG334Y
(E)=
(F)=

No.	Lev.	Parts No.	Description	Q'ty (A)	(B)	(C)	(D)	(E)	(F)	I	R
1	1	1A7180-52610	SENSOR, ROTATION	2	2	2	2				
2	1	1A7180-52610	SENSOR, ROTATION	1	1	1	1				
3	1	26450-060122	BOLT, M6X 12	3	3	3	3				

N:Old $\xleftrightarrow[\text{No}]{\text{Yes}}$ New, Q:Old $\xleftrightarrow[\text{Yes}]{\text{No}}$ New, R:Old $\xleftrightarrow[\text{Yes}]{\text{Yes}}$ New, S:Old $\xleftrightarrow[\text{No}]{\text{No}}$ New, W:Add, Z:Discontinued, F:Interchangeable by set, K:Q'ty Change

Copyright (C) 2014 YANMAR CO., LTD. All RightsReserved.

Fig.76. FRONT IDLE

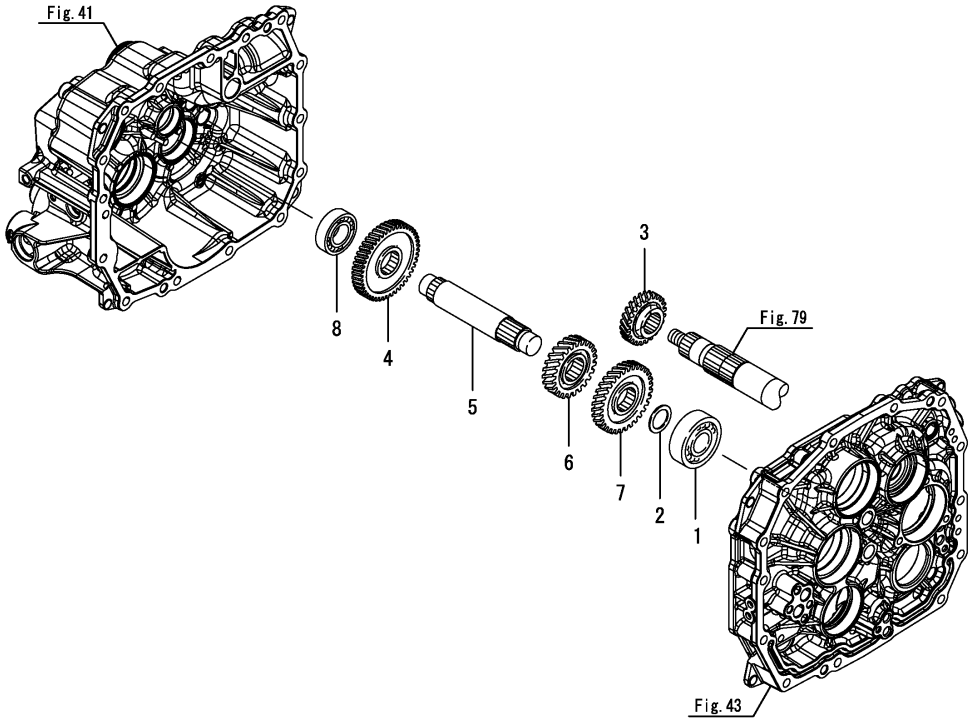

(A)=EG326Y (B)=EG328Y (C)=EG330Y (D)=EG334Y (E)= (F)=

No.	Lev.	Parts No.	Description	Q'ty (A)	(B)	(C)	(D)	(E)	(F)	I	R
1	1	194555-25880	BEARING, BALL TMB305	1	1	1	1				
2	1	194190-26840	SPACER, 25X35X1.6	1	1	1	1				
3	1	1A7140-28010	PINION, DRIVE Z=24	1	1	1	1				
4	1	1A7180-28020	PINION, Z=46	1	1	1	1				
5	1	1A7180-28050	SHAFT, IDLE	1	1	1	1				
6	1	1A7180-28060	PINION, Z=22	1	1	1	1				
7	1	1A7140-28070	GEAR, IDLE 29	1	1	1	1				
8	1	24101-062054	BEARING, BALL 6205	1	1	1	1				

N:Old $\overset{\text{Yes}}{\underset{\text{No}}{\leftrightarrows}}$ New, Q:Old $\overset{\text{No}}{\underset{\text{Yes}}{\leftrightarrows}}$ New, R:Old $\overset{\text{Yes}}{\underset{\text{Yes}}{\leftrightarrows}}$ New, S:Old $\overset{\text{No}}{\underset{\text{No}}{\leftrightarrows}}$ New, W:Add, Z:Discontinued, F:Interchangeable by set, K:Q'ty Change

Copyright (C) 2014 YANMAR CO., LTD. All RightsReserved.

Fig.77. FRONT DRIVE

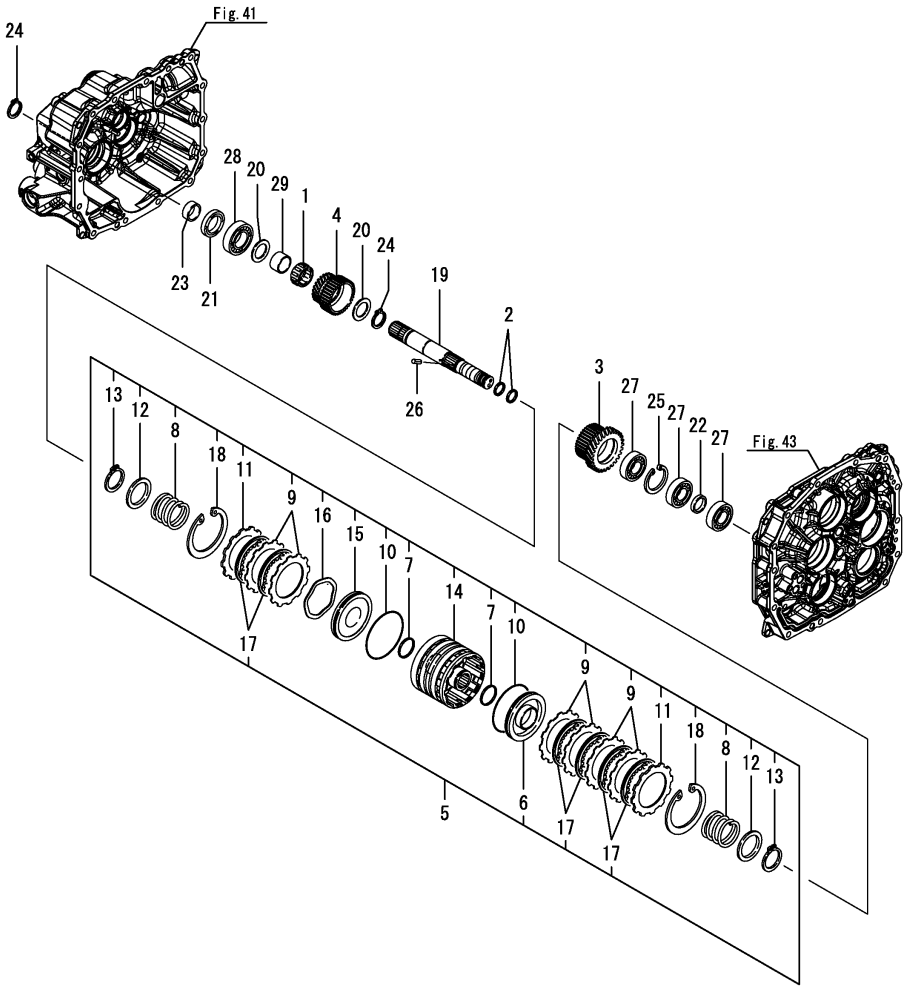

(A)=EG326Y (D)=EG334Y
(B)=EG328Y (E)=
(C)=EG330Y (F)=

No.	Lev.	Parts No.	Description	Q'ty (A)	(B)	(C)	(D)	(E)	(F)	I	R
1	1	194250-25240	BEARING, 354019	1	1	1	1				
2	1	198167-26240	RING, SEAL 21X25X3	2	2	2	2				
3	1	1A7180-28030	GEAR, CLUTCH 27	1	1	1	1				
4	1	1A7180-28040	GEAR, CLUTCH 26 HG	1	1	1	1				
5	1	1A7180-28110	CLUTCH, FRONT DRIVE	1	1	1	1				
6	2	1A7180-21220	PISTON	1	1	1	1				
7	2	1A7180-21230	RING, SEAL	2	2	2	2				
7-1	2	1A7180-26140	PACKING,19033	2	2	2	2			F	1
	(A=F100008)	(B=F200001)	(C=F300001) (D=F400004)								
8	2	1A7180-21240	SPRING, RETURN	2	2	2	2				
9	2	1A7180-21250	PLATE, STEEL 1.6	6	6	6	6				
10	2	1A7351-25830	RING, 96	2	2	2	2				
11	2	1A7351-26770	PLATE, STEEL 4.0	2	2	2	2				
12	2	1A7351-26790	WASHER	2	2	2	2				
13	2	1A6240-26830	CIRCLIP, C40 SHAFT	2	2	2	2				
14	2	1A7180-28120	CASE, CLUTCH	1	1	1	1				
14-1	2	1A7180-28121	CASE,CLUTCH	1	1	1	1			F	1
	(A=F100008)	(B=F200001)	(C=F300001) (D=F400004)								
15	2	1A7180-28130	PISTON	1	1	1	1				
16	2	1A7180-28140	SPRING	1	1	1	1				
17	2	1A7180-28150	PLATE, DISK 2.0	6	6	6	6				
18	2	22252-001000	RING, 100	2	2	2	2				
19	1	1A7180-28300	SHAFT ASSY, CLUTCH	1	1	1	1				
20	1	194191-28350	WASHER, 30X45X2.5	2	2	2	2				
21	1	194305-32650	SEAL, OIL TC35529	1	1	1	1				
22	1	194680-33560	COLLAR, 28X34.5X6.5	1	1	1	1				
23	1	194420-39370	SLEEVE, SI 30X35X13A	1	1	1	1				
24	1	22242-000300	RING, 30	2	2	2	2				
25	1	22252-000520	RING, 52	1	1	1	1				
26	1	22351-030008	PIN, SPRING 3.0X 8	1	1	1	1				
27	1	24101-062054	BEARING, BALL 6205	3	3	3	3				
28	1	24101-062064	BEARING, BALL 6206	1	1	1	1				
29	1	24163-305200	RING, INNER 303520	1	1	1	1				

Remarks
(1)Interchangeable by simultaneous replacement with No.7-1 & 14-1.

N:Old $\overset{\text{Yes}}{\underset{\text{No}}{\leftrightarrows}}$ New, Q:Old $\overset{\text{No}}{\underset{\text{Yes}}{\leftrightarrows}}$ New, R:Old $\overset{\text{Yes}}{\underset{\text{Yes}}{\leftrightarrows}}$ New, S:Old $\overset{\text{No}}{\underset{\text{No}}{\leftrightarrows}}$ New, W:Add, Z:Discontinued, F:Interchangeable by set, K:Q'ty Change

Copyright (C) 2014 YANMAR CO., LTD. All RightsReserved.

Fig.78. I-H.M.T.

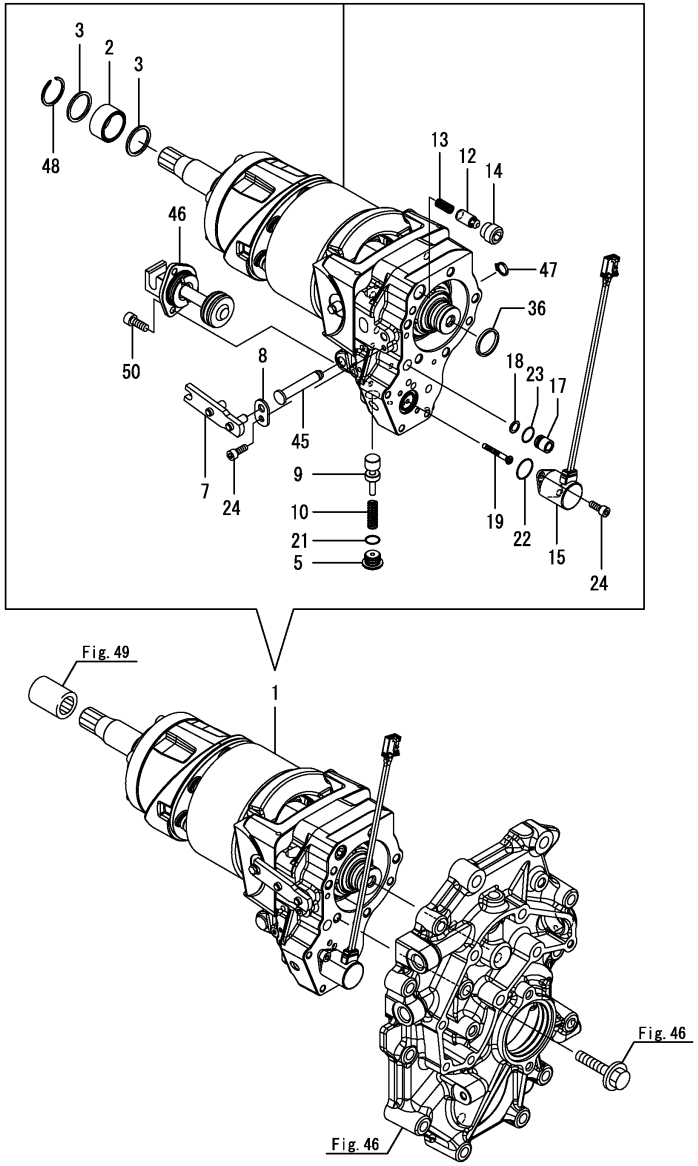

(A)=EG326Y (D)=EG334Y
(B)=EG328Y (E)=
(C)=EG330Y (F)=

No.	Lev.	Parts No.	Description	Q'ty (A)	(B)	(C)	(D)	(E)	(F)	I	R
1	1	168KA0-29001	I-HMT KIT	1	1	1	1				
1-2	1	168KAA-29000	I-HMT-A KIT	1	1	1	1			S	1
	(A=*2011.07)	(B=*2011.07)	(C=*2011.07) (D=*2011.07)								
1-4	1	168KAA-29002	I-HMT-A KIT	1	1	1	1			N	
	(A=F090782)	(B=F080643)	(C=F071895) (D=F061721)								
2	2	194311-13880	BEARING, 283518	1	1	1	1				
3	2	194311-13910	WASHER, 28X33.5X2	2	2	2	2				
5	2	168461-01150	PLUG(CHEWCK	1	1	1	1				
7	2	168KA0-29150	LEVER(SERVO	1	1	1	1				
8	2	168KA0-29160	GUIDE(SERVO LEVER	1	1	1	1				
9	2	168KA0-29170	SPOOL(FEEDBACK	1	1	1	1				
10	2	168KA0-29180	SPRING(SERVO	1	1	1	1				
12	2	168KA0-29200	VALVE(CHARGE RELIEF	1	1	1	1				
13	2	168KA0-29210	SPRING(CHARGE RELIEF	1	1	1	1				
14	2	168KA0-29220	COVER(CHARGE RELIEF	1	1	1	1				
15	2	168KA0-29231	SOLENOID CMP	1	1	1	1				
15-1	2	168KAA-29230	SOLENOID ASSY	1	1	1	1			N	
	(A=F090782)	(B=F080643)	(C=F071895) (D=F061721)								
17	2	168KA1-29290	SPACER(STRAINER	1	1	1	1				
18	2	194680-77770	STRAINER	1	1	1	1				
19	2	168HQ0-87690	SPOOL VALVE(DETENT	1	1	1	1				
21	2	24311-000140	O-RING, 1AP14.0	1	1	1	1				
22	2	24311-000220	O-RING, 1AP22.0	1	1	1	1				
23	2	24341-000090	O-RING, 1AS9.0	1	1	1	1				
24	2	26450-060162	BOLT, M6X 16	3	3	3	3				
36	2	145610-83400	RING, SEAL	1	1	1	1				
45	2	168KA0-29840	PIN(CRADLE	1	1	1	1				
46	2	168KA0-29900	PISTON(SERVO CMP	1	1	1	1				
47	2	22242-000100	RING, 10	1	1	1	1				
48	2	24164-000282	CIRCLIP 28	1	1	1	1				
50	2	26450-060162	BOLT, M6X 16	3	3	3	3				

Remarks
(1)Interchangeable by simultaneous replacement with No.1-2, Fig.46 No.1,5.

N:Old $\xleftarrow[\text{No}]{\text{Yes}}$ New, Q:Old $\xleftarrow[\text{Yes}]{\text{No}}$ New, R:Old $\xleftarrow[\text{Yes}]{\text{Yes}}$ New, S:Old $\xleftarrow[\text{No}]{\text{No}}$ New, W:Add, Z:Discontinued, F:Interchangeable by set, K:Q'ty Change

Copyright (C) 2014 YANMAR CO., LTD. All RightsReserved.

Fig.79. RING GEAR

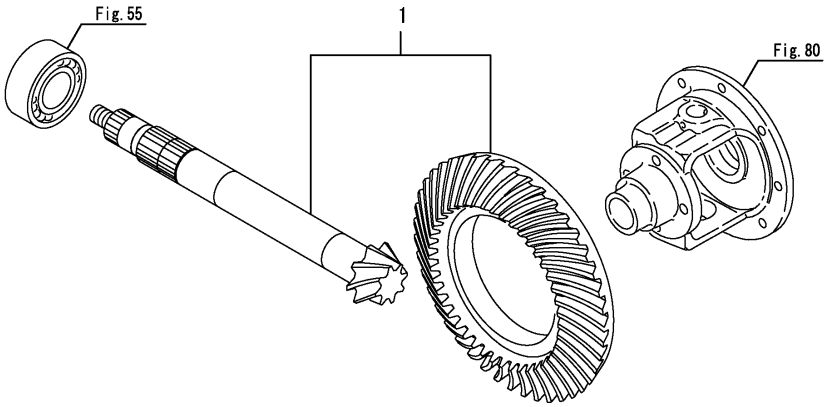

(A)=EG326Y
(B)=EG328Y
(C)=EG330Y
(D)=EG334Y
(E)=
(F)=

No.	Lev.	Parts No.	Description	Q'ty (A)	(B)	(C)	(D)	(E)	(F)	I	R
1	1	1A7140-31000	GEAR ASSY, RING	1	1	1	1				

N:Old ◄Yes/No► New, Q:Old ◄No/Yes► New, R:Old ◄Yes/Yes► New, S:Old ◄No/No► New, W:Add, Z:Discontinued, F:Interchangeable by set, K:Q'ty Change

Copyright (C) 2014 YANMAR CO., LTD. All RightsReserved.

Fig.80. DIFFERENTIAL GEAR

(A)=EG326Y
(B)=EG328Y
(C)=EG330Y
(D)=EG334Y
(E)=
(F)=

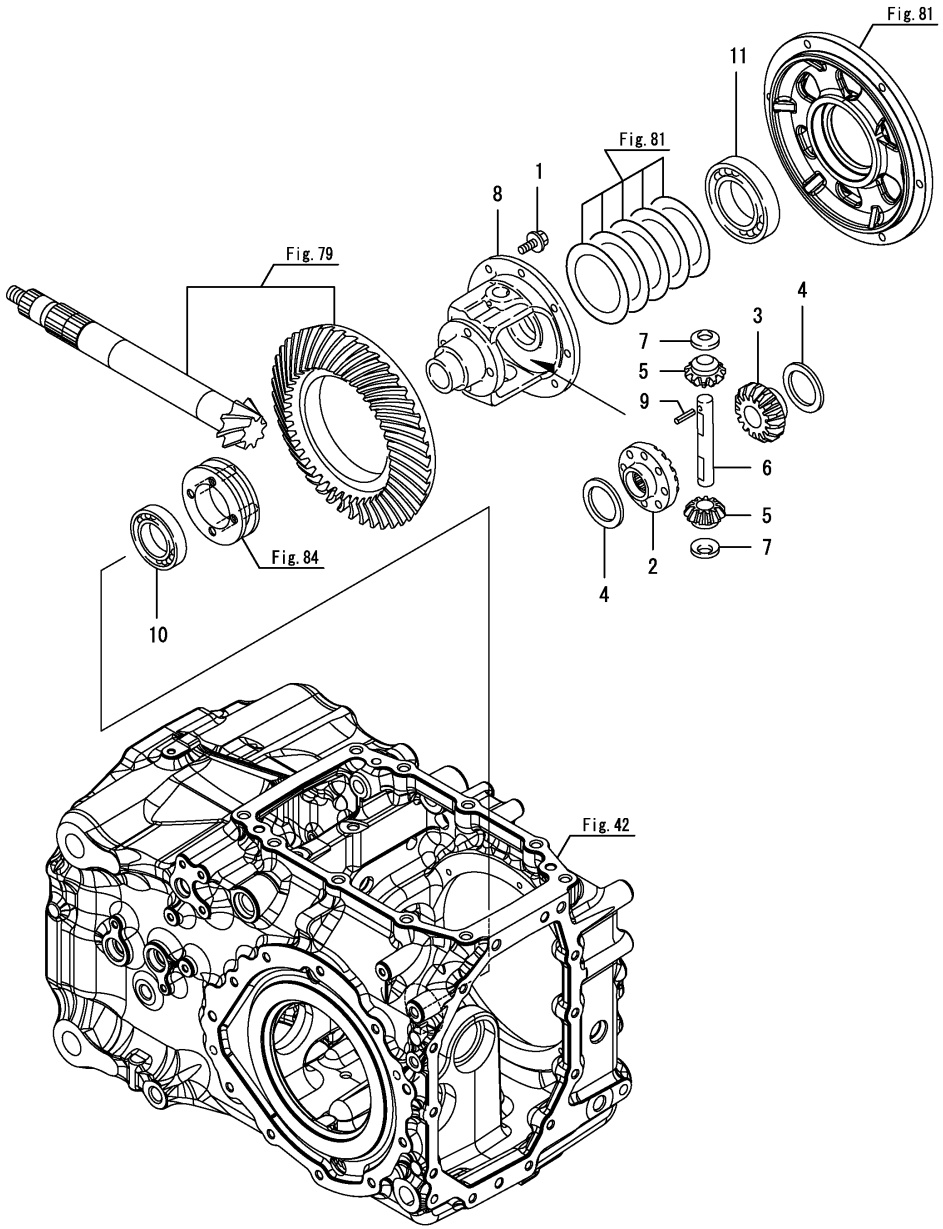

No.	Lev.	Parts No.	Description	Q'ty (A)	(B)	(C)	(D)	(E)	(F)	I	R
1	1	1A7351-31450	BOLT, M8X18	12	12	12	12				
2	1	198360-31500	GEAR, DIFFERENTIAL L	1	1	1	1				
3	1	198360-31510	GEAR, DIFFERENTIAL R	1	1	1	1				
4	1	198360-31530	LINER, PINION	2	2	2	2				
5	1	198360-31800	PINION, DIFFERENTIAL	2	2	2	2				
6	1	198360-31810	SHAFT, DIFFERENTIAL	1	1	1	1				
7	1	198360-31850	LINER, PINION	2	2	2	2				
8	1	198072-32110	CASE, DIFFERENTIAL	1	1	1	1				
9	1	22351-050040	PIN, SPRING 5.0X40	1	1	1	1				
10	1	24101-060084	BEARING, BALL 6008	1	1	1	1				
11	1	24101-060114	BEARING, BALL 6011	1	1	1	1				

N:Old $\xleftrightarrow[\text{No}]{\text{Yes}}$ New, Q:Old $\xleftrightarrow[\text{Yes}]{\text{No}}$ New, R:Old $\xleftrightarrow[\text{Yes}]{\text{Yes}}$ New, S:Old $\xleftrightarrow[\text{No}]{\text{No}}$ New, W:Add, Z:Discontinued, F:Interchangeable by set, K:Q'ty Change

Copyright (C) 2014 YANMAR CO., LTD. All RightsReserved.

Fig.81. DIFFERENTIAL CARRIER

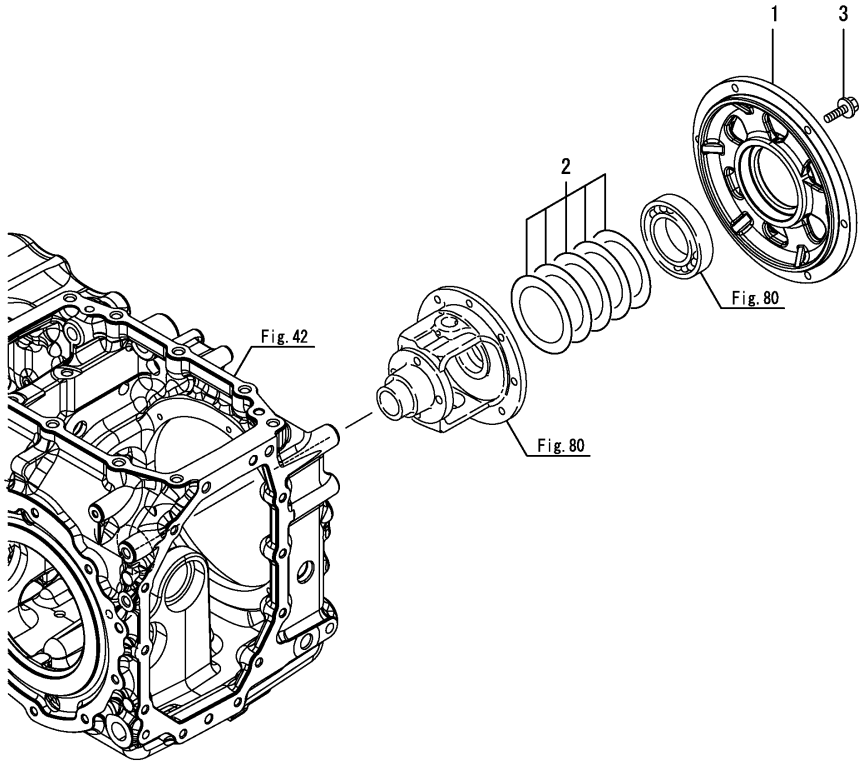

(A)=EG326Y (D)=EG334Y
(B)=EG328Y (E)=
(C)=EG330Y (F)=

No.	Lev.	Parts No.	Description	Q'ty (A)	(B)	(C)	(D)	(E)	(F)	I	R
1	1	1A7180-31200	CASE, CARRIER	1	1	1	1				
2	1	194555-32340	SHIM SET	1	1	1	1				
3	1	26106-080252	BOLT, M8X 25 PLATED	6	6	6	6				

N:Old $\frac{\text{Yes}}{\text{No}}$ New, Q:Old $\frac{\text{No}}{\text{Yes}}$ New, R:Old $\frac{\text{Yes}}{\text{Yes}}$ New, S:Old $\frac{\text{No}}{\text{No}}$ New, W:Add, Z:Discontinued, F:Interchangeable by set, K:Q'ty Change

Copyright (C) 2014 YANMAR CO., LTD. All RightsReserved.

Fig.82. REAR HOUSING

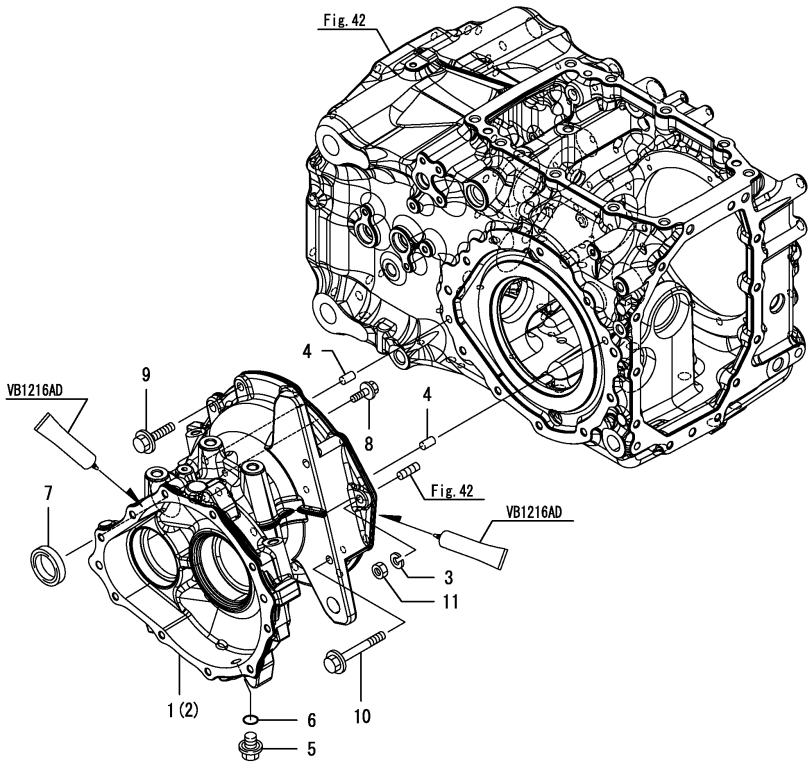

(A)=EG326Y (D)=EG334Y
(B)=EG328Y (E)=
(C)=EG330Y (F)=

No.	Lev.	Parts No.	Description	Q'ty (A)	(B)	(C)	(D)	(E)	(F)	I	R
1	1	1A7140-31110	HOUSING, REAR AXLE L	1	1	1	1				
2	1	1A7140-31120	HOUSING, REAR AXLE R	1	1	1	1				
3	1	22217-100000	WASHER, SPRING 10	1	1	1	1				
4	1	22312-100180	PIN, PARALLEL M10X18	4	4	4	4				
5	1	23491-140002	PLUG, 14	2	2	2	2				
6	1	24311-000160	O-RING, 1AP16.0	2	2	2	2				
7	1	24421-355008	SEAL, OIL TC355008	2	2	2	2				
8	1	26106-080122	BOLT, M8X 12 PLATED	4	4	4	4				
9	1	26106-100302	BOLT, M10X 30 PLATED	17	17	17	17				
10	1	26106-100802	BOLT, M10X 80 PLATED	4	4	4	4				
11	1	26716-100002	NUT, M10	1	1	1	1				

Remarks
* Applied to the following models.
EG326, EG328
EG330A, EG330K, EG330KW, EG334A, EG334KW, EG334KWA

N:Old $\overset{\text{Yes}}{\underset{\text{No}}{\leftrightarrow}}$ New, Q:Old $\overset{\text{No}}{\underset{\text{Yes}}{\leftrightarrow}}$ New, R:Old $\overset{\text{Yes}}{\underset{\text{Yes}}{\leftrightarrow}}$ New, S:Old $\overset{\text{No}}{\underset{\text{No}}{\leftrightarrow}}$ New, W:Add, Z:Discontinued, F:Interchangeable by set, K:Q'ty Change

Copyright (C) 2014 YANMAR CO., LTD. All RightsReserved.

Fig.83. REAR HOUSING

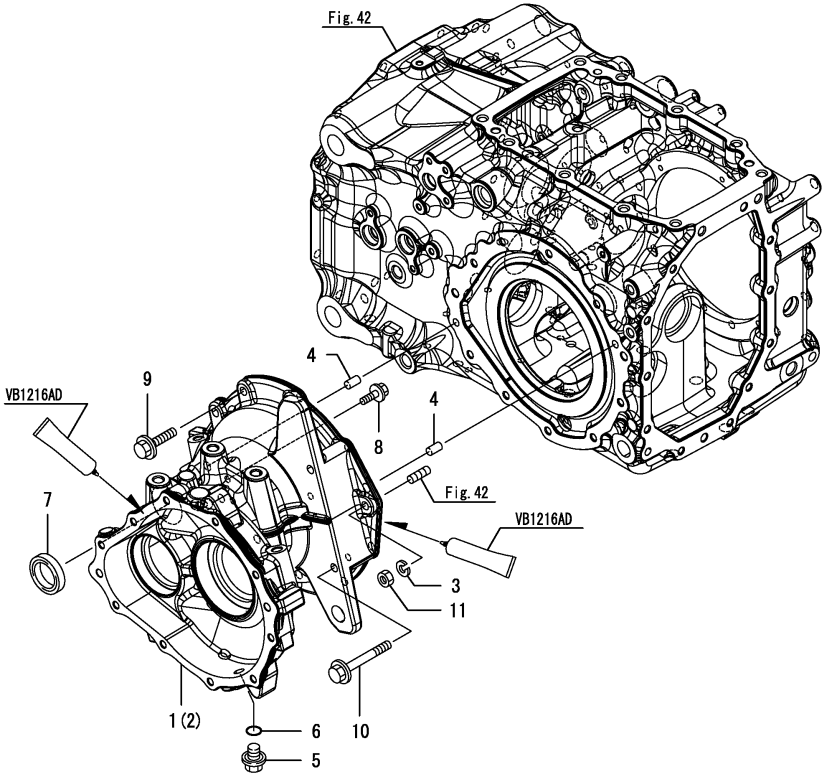

(A)=EG326Y (D)=EG334Y
(B)=EG328Y (E)=
(C)=EG330Y (F)=

No.	Lev.	Parts No.	Description	Q'ty (A)	(B)	(C)	(D)	(E)	(F)	I	R
1	1	1A7160-31110	HOUSING, REAR AXLE L			1	1				
2	1	1A7160-31120	HOUSING, REAR AXLE R			1	1				
3	1	22217-100000	WASHER, SPRING 10			1	1				
4	1	22312-100180	PIN, PARALLEL M10X18			4	4				
5	1	23491-140002	PLUG, 14			2	2				
6	1	24311-000160	O-RING, 1AP16.0			2	2				
7	1	24421-355008	SEAL, OIL TC355008			2	2				
8	1	26106-080122	BOLT, M8X 12 PLATED			4	4				
9	1	26106-100302	BOLT, M10X 30 PLATED			17	17				
10	1	26106-100802	BOLT, M10X 80 PLATED			4	4				
11	1	26716-100002	NUT, M10			1	1				

Remarks
* Applied to the following models.
EG330, EG334

N:Old $\xleftarrow[\text{No}]{\text{Yes}}$ New, Q:Old $\xleftarrow[\text{Yes}]{\text{No}}$ New, R:Old $\xleftrightarrow[\text{Yes}]{\text{Yes}}$ New, S:Old $\xleftrightarrow[\text{No}]{\text{No}}$ New, W:Add, Z:Discontinued, F:Interchangeable by set, K:Q'ty Change

Copyright (C) 2014 YANMAR CO., LTD. All RightsReserved.

Fig.84. DIFFERENTIAL LOCK

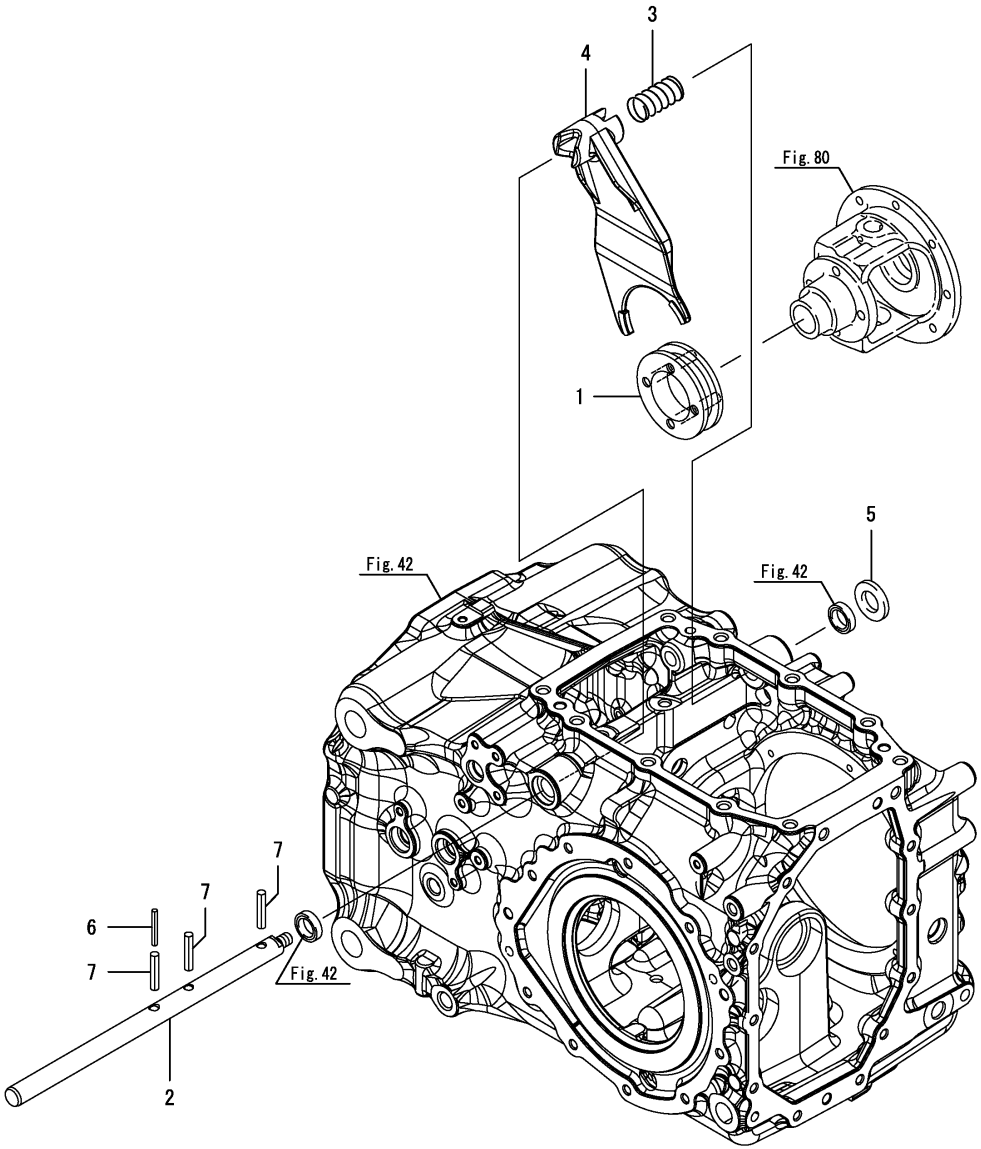

(A)=EG326Y (D)=EG334Y
(B)=EG328Y (E)=
(C)=EG330Y (F)=

No.	Lev.	Parts No.	Description	Q'ty (A)	(B)	(C)	(D)	(E)	(F)	I	R
1	1	194130-33100	SLIDER, DIFFERENTIAL	1	1	1	1				
2	1	1A7180-33110	SHAFT, LOCK	1	1	1	1				
3	1	198421-33140	SPRING	1	1	1	1				
4	1	1A7180-33140	FORK, LOCK	1	1	1	1				
4-1	1	1A7180-33141	FORK, DIFF. LOCK	1	1	1	1			N	
	(A=F100008)	(B=F200001)	(C=F300001) (D=F400004)								
5	1	22137-200000	WASHER, 20	1	1	1	1				
6	1	22351-050040	PIN, SPRING 5.0X40	1	1	1	1				
7	1	22351-080040	PIN, SPRING 8.0X40	3	3	3	3				

N:Old $\overset{\text{Yes}}{\underset{\text{No}}{\leftrightarrows}}$ New, Q:Old $\overset{\text{No}}{\underset{\text{Yes}}{\leftrightarrows}}$ New, R:Old $\overset{\text{Yes}}{\underset{\text{Yes}}{\leftrightarrows}}$ New, S:Old $\overset{\text{No}}{\underset{\text{No}}{\leftrightarrows}}$ New, W:Add, Z:Discontinued, F:Interchangeable by set, K:Q'ty Change

Copyright (C) 2014 YANMAR CO., LTD. All RightsReserved.

Fig.85. DIFFERENTIAL LOCK PEDAL

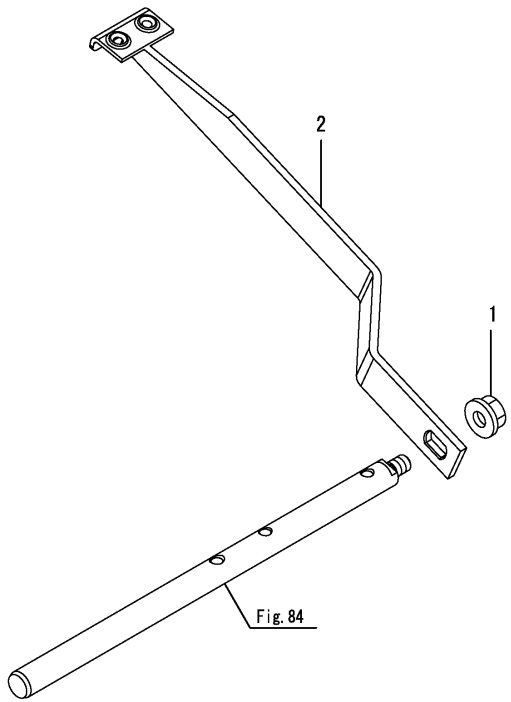

(A)=EG326Y (D)=EG334Y
(B)=EG328Y (E)=
(C)=EG330Y (F)=

No.	Lev.	Parts No.	Description	Q'ty (A)	(B)	(C)	(D)	(E)	(F)	I	R
1	1	194990-22160	NUT, M12	1	1	1	1				
2	1	1A7180-33150	PEDAL, LOCK	1	1	1	1				

N:Old $\xleftrightarrow[\text{No}]{\text{Yes}}$ New, Q:Old $\xleftrightarrow[\text{Yes}]{\text{No}}$ New, R:Old $\xleftrightarrow[\text{Yes}]{\text{Yes}}$ New, S:Old $\xleftrightarrow[\text{No}]{\text{No}}$ New, W:Add, Z:Discontinued, F:Interchangeable by set, K:Q'ty Change

Copyright (C) 2014 YANMAR CO., LTD. All RightsReserved.

Fig.86. FINAL GEAR

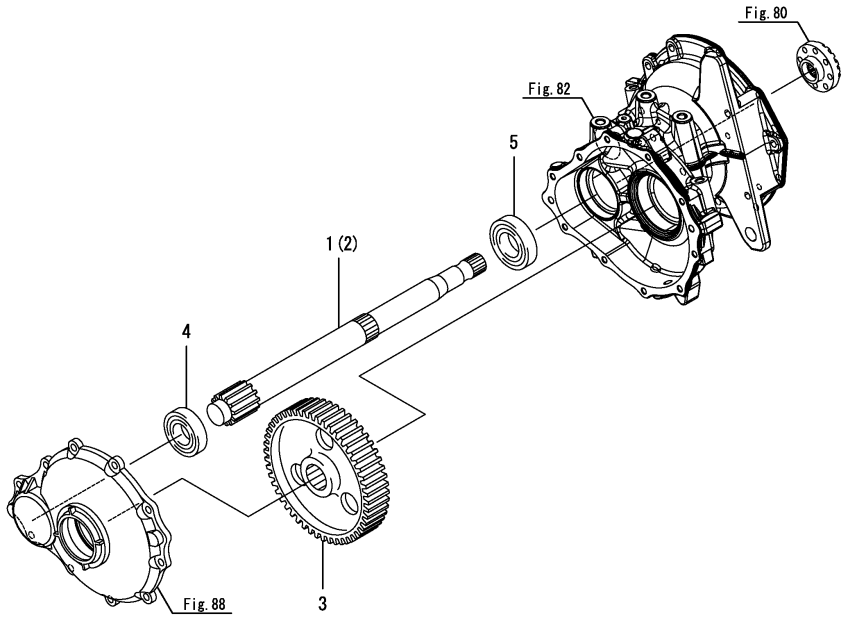

(A)=EG326Y (D)=EG334Y
(B)=EG328Y (E)=
(C)=EG330Y (F)=

No.	Lev.	Parts No.	Description	Q'ty (A)	(B)	(C)	(D)	(E)	(F)	I	R
1	1	1A7140-33400	PINION, FINAL L9	1	1	1	1				
2	1	1A7140-33410	PINION, FINAL R9	1	1	1	1				
3	1	198360-33500	GEAR, FINAL	2	2	2	2				
4	1	24101-062070	BEARING, BALL 6207C3	2	2	2	2				
5	1	24101-062080	BEARING, BALL 6208C3	2	2	2	2				

Remarks
* Applied to the following models.
EG326, EG328
EG330A, EG330K, EG330KW, EG334A, EG334KW, EG334KWA

N:Old $\xleftrightarrow[\text{No}]{\text{Yes}}$ New, Q:Old $\xleftrightarrow[\text{Yes}]{\text{No}}$ New, R:Old $\xleftrightarrow[\text{Yes}]{\text{Yes}}$ New, S:Old $\xleftrightarrow[\text{No}]{\text{No}}$ New, W:Add, Z:Discontinued, F:Interchangeable by set, K:Q'ty Change

Copyright (C) 2014 YANMAR CO., LTD. All RightsReserved.

Fig.87. FINAL GEAR

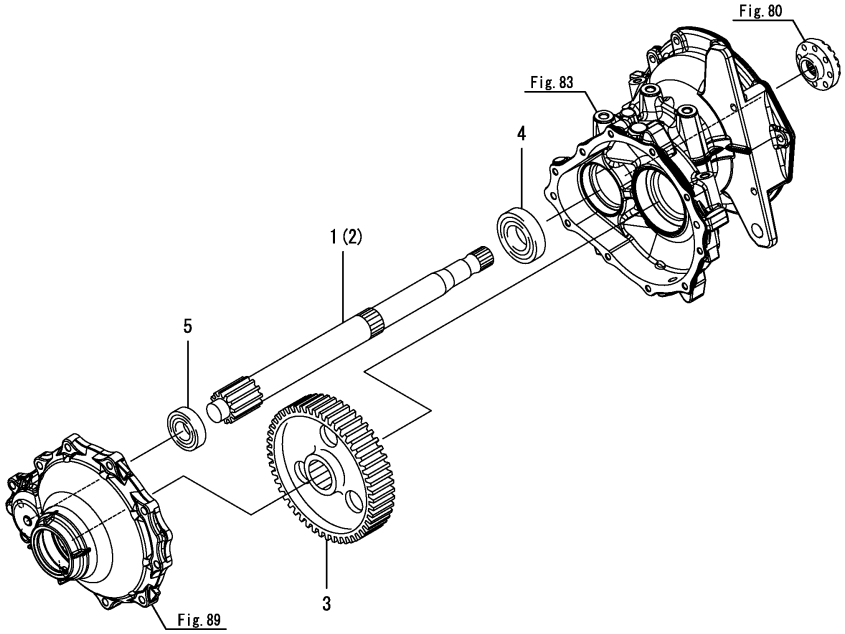

(A)=EG326Y (D)=EG334Y
(B)=EG328Y (E)=
(C)=EG330Y (F)=

No.	Lev.	Parts No.	Description	Q'ty (A)	(B)	(C)	(D)	(E)	(F)	I	R
1	1	1A7160-33400	PINION, FINAL L9			1	1				
2	1	1A7160-33410	PINION, FINAL R9			1	1				
3	1	1A7160-33510	GEAR, FINAL 56			2	2				
4	1	24101-062080	BEARING, BALL 6208C3			2	2				
5	1	24101-063060	BEARING, BALL 6306C3			2	2				

Remarks
* Applied to the following models.
EG330, EG334

N:Old $\xleftrightarrow[\text{No}]{\text{Yes}}$ New, Q:Old $\xleftrightarrow[\text{Yes}]{\text{No}}$ New, R:Old $\xleftrightarrow[\text{Yes}]{\text{Yes}}$ New, S:Old $\xleftrightarrow[\text{No}]{\text{No}}$ New, W:Add, Z:Discontinued, F:Interchangeable by set, K:Q'ty Change

Copyright (C) 2014 YANMAR CO., LTD. All RightsReserved.

Fig.88. REAR AXLE SHAFT

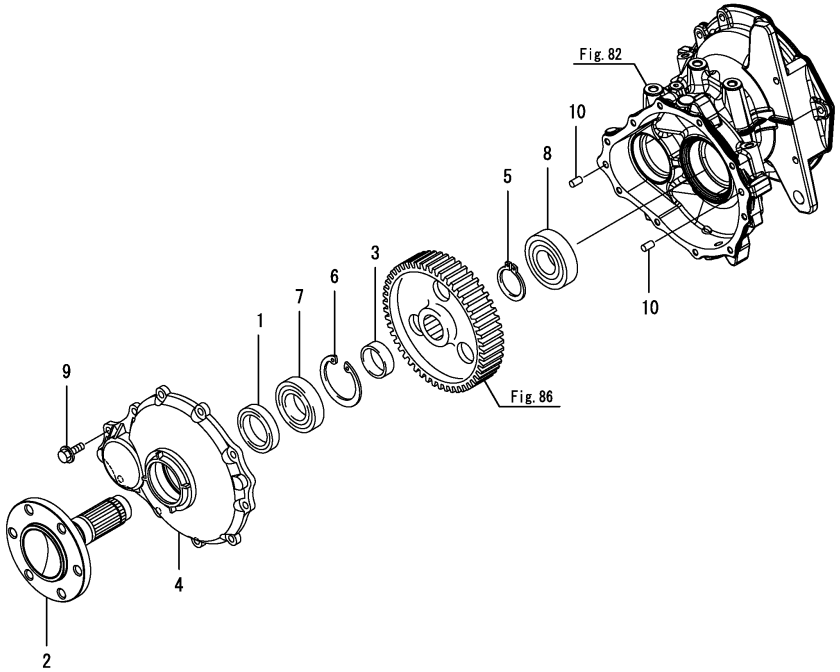

(A)=EG326Y (B)=EG328Y (C)=EG330Y (D)=EG334Y (E)= (F)=

No.	Lev.	Parts No.	Description	Q'ty (A)	(B)	(C)	(D)	(E)	(F)	I	R
1	1	198475-32660	SEAL, QLNY527514.5	2	2	2	2				
2	1	194555-34100	SHAFT, REAR AXLE	2	2	2	2				
3	1	194555-34120	COLLAR, 45X54X17	2	2	2	2				
4	1	194555-34310	COVER, REAR AXLE	2	2	2	2				
5	1	22242-000450	RING, 45	2	2	2	2				
6	1	22252-000850	RING, 85	2	2	2	2				
7	1	24101-062094	BEARING, BALL 6209	2	2	2	2				
8	1	24101-063084	BEARING, BALL 6308	2	2	2	2				
9	1	26106-100302	BOLT, M10X 30 PLATED	20	20	20	20				
10	1	22312-100180	PIN, PARALLEL M10X18	4	4	4	4				

Remarks
* Applied to the following models.
EG326, EG328
EG330A, EG330K, EG330KW, EG334A, EG334KW, EG334KWA

N:Old $\frac{\text{Yes}}{\text{No}}$ New, Q:Old $\frac{\text{No}}{\text{Yes}}$ New, R:Old $\frac{\text{Yes}}{\text{Yes}}$ New, S:Old $\frac{\text{No}}{\text{No}}$ New, W:Add, Z:Discontinued, F:Interchangeable by set, K:Q'ty Change

Copyright (C) 2014 YANMAR CO., LTD. All RightsReserved.

Fig.89. REAR AXLE SHAFT

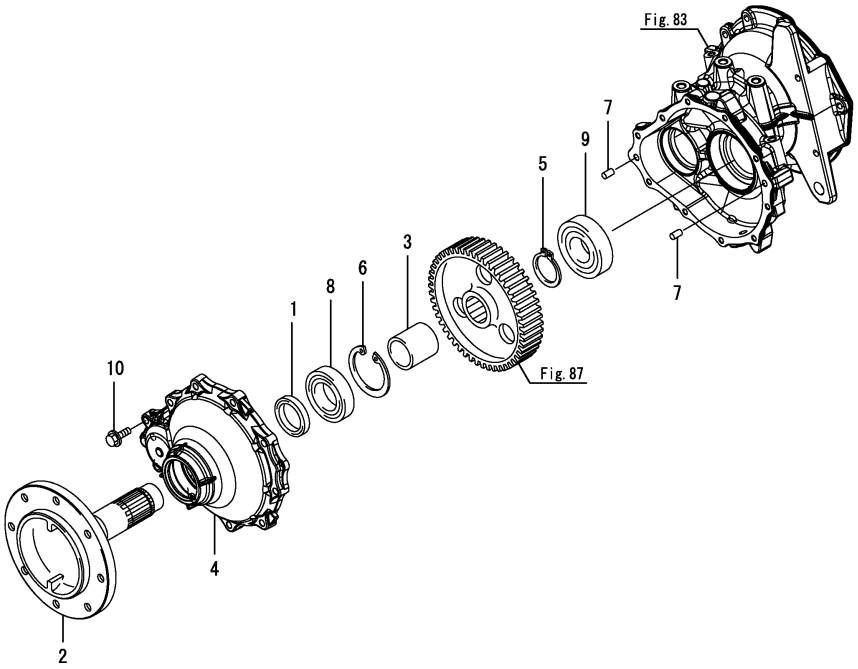

(A)=EG326Y (B)=EG328Y (C)=EG330Y (D)=EG334Y (E)= (F)=

No.	Lev.	Parts No.	Description	Q'ty (A)	(B)	(C)	(D)	(E)	(F)	I	R
1	1	198483-32660	SEAL, QLNY578015			2	2				
2	1	198091-34100	SHAFT, REAR AXLE			2	2				
3	1	198091-34130	COLLAR, 51X57X58			2	2				
4	1	1A7160-34310	COVER, REAR AXLE			2	2				
5	1	22242-000500	RING, 50			2	2				
6	1	22252-000900	RING, 90			2	2				
7	1	22312-100180	PIN, PARALLEL M10X18			4	4				
8	1	24101-062104	BEARING, BALL 6210			2	2				
9	1	24101-063094	BEARING, BALL 6309			2	2				
10	1	26106-100402	BOLT, M10X 40 PLATED			20	20				

Remarks
* Applied to the following models.
EG330, EG334

N:Old $\xleftarrow[\text{No}]{\text{Yes}}$ New, Q:Old $\xleftarrow[\text{Yes}]{\text{No}}$ New, R:Old $\xleftrightarrow[\text{Yes}]{\text{Yes}}$ New, S:Old $\xleftrightarrow[\text{No}]{\text{No}}$ New, W:Add, Z:Discontinued, F:Interchangeable by set, K:Q'ty Change

Copyright (C) 2014 YANMAR CO., LTD. All RightsReserved.

Fig.90. REAR WHEEL TIRE

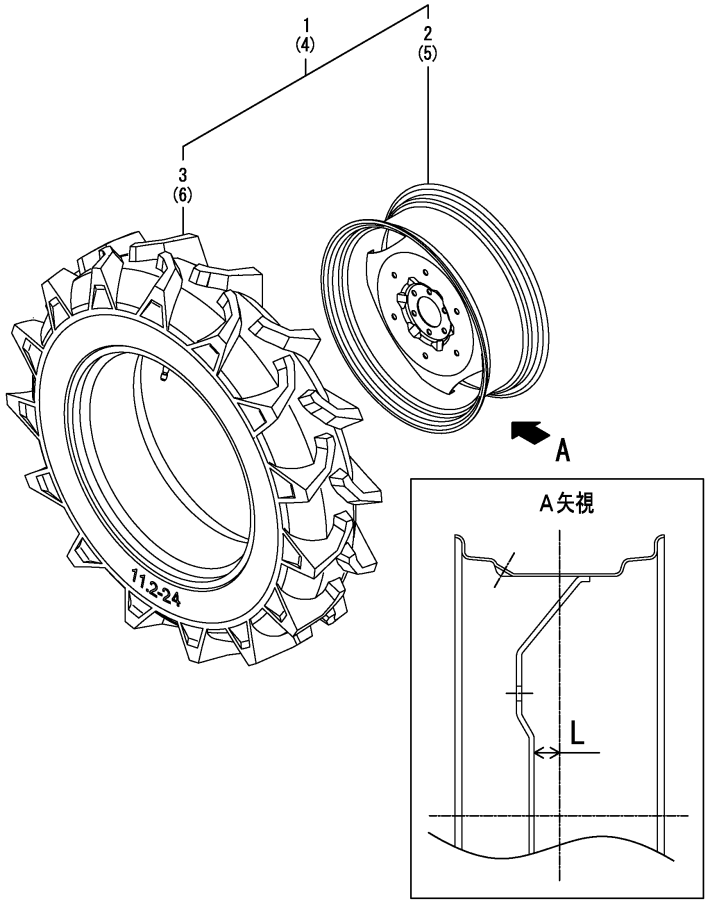

Remarks
* Applied to the following models.
EG326, EG330A, EG334A
(1)L=No.2, 5 : 20mm, No.2-1, 5-1 : 30mm.

(A)=EG326Y (D)=EG334Y
(B)=EG328Y (E)=
(C)=EG330Y (F)=

No.	Lev.	Parts No.	Description	Q'ty (A)	(B)	(C)	(D)	(E)	(F)	I	R
1	1	1A7140-34700	TIRE, REAR 11.2-24HL	1							
1-1	1	1A7140-34701	TIRE, REAR 11.2-24HL	1		1	1			N	
	(A=F090103)										
2	2	1A7010-34650	WHEEL, W9X24	1							
2-1	2	1A7140-34760	WHEEL, W9X24	1		1	1			S	1
	(A=F090103)										
3	2	1A7900-34900	TIRE, REAR 11.2-24	1		1	1				
4	1	1A7140-34800	TIRE, REAR 11.2-24HR	1							
4-1	1	1A7140-34801	TIRE, REAR 11.2-24HR	1		1	1			N	
	(A=F090103)										
5	2	1A7010-34650	WHEEL, W9X24	1							
5-1	2	1A7140-34760	WHEEL, W9X24	1		1	1			S	1
	(A=F090103)										
6	2	1A7900-34900	TIRE, REAR 11.2-24	1		1	1				

N:Old $\xleftrightarrow[\text{No}]{\text{Yes}}$ New, Q:Old $\xleftrightarrow[\text{Yes}]{\text{No}}$ New, R:Old $\xleftrightarrow[\text{Yes}]{\text{Yes}}$ New, S:Old $\xleftrightarrow[\text{No}]{\text{No}}$ New, W:Add, Z:Discontinued, F:Interchangeable by set, K:Q'ty Change

Copyright (C) 2014 YANMAR CO., LTD. All RightsReserved.

Fig.91. REAR WHEEL TIRE

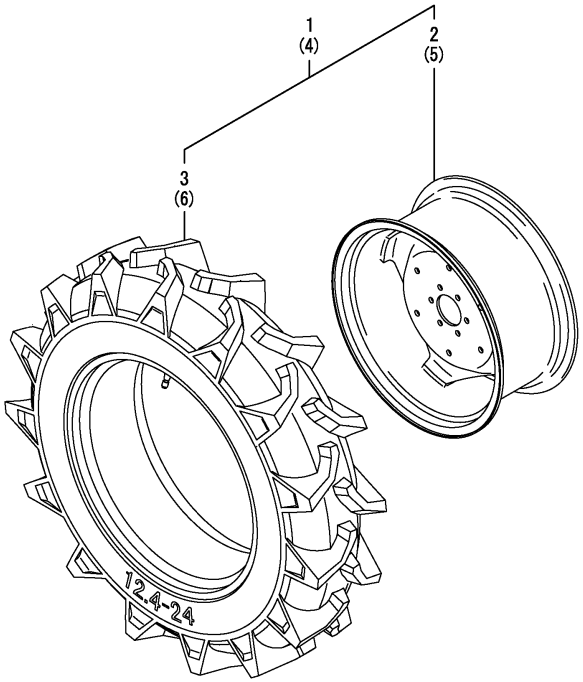

(A)=EG326Y (D)=EG334Y
(B)=EG328Y (E)=
(C)=EG330Y (F)=

No.	Lev.	Parts No.	Description	Q'ty (A)	(B)	(C)	(D)	(E)	(F)	I	R
1	1	1A7150-34700	TIRE, REAR 12.4-24HL		1						
2	2	1A7150-34760	WHEEL, W10X24		1						
3	2	1A7150-34900	TIRE ASSY, 12.4-24 H		1						
4	1	1A7150-34800	TIRE, REAR 12.4-24HR		1						
5	2	1A7150-34760	WHEEL, W10X24		1						
6	2	1A7150-34900	TIRE ASSY, 12.4-24 H		1						

Remarks
* Applied to the following models.
EG328

N:Old $\xleftrightarrow[\text{No}]{\text{Yes}}$ New, Q:Old $\xleftrightarrow[\text{Yes}]{\text{No}}$ New, R:Old $\xleftrightarrow[\text{Yes}]{\text{Yes}}$ New, S:Old $\xleftrightarrow[\text{No}]{\text{No}}$ New, W:Add, Z:Discontinued, F:Interchangeable by set, K:Q'ty Change

Copyright (C) 2014 YANMAR CO., LTD. All RightsReserved.

Fig.92. REAR WHEEL TIRE

(A)=EG326Y
(B)=EG328Y
(C)=EG330Y
(D)=EG334Y
(E)=
(F)=

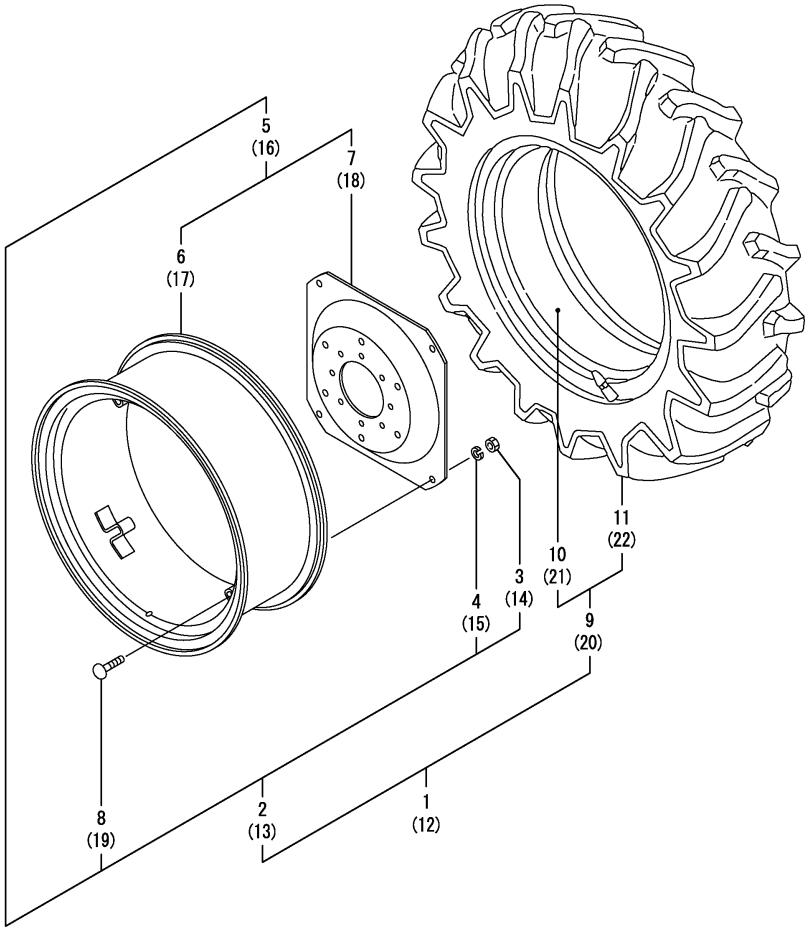

No.	Lev.	Parts No.	Description	Q'ty (A)	(B)	(C)	(D)	(E)	(F)	I	R
1	1	1A7020-34700	TIRE, REAR 12.4-26HL			1	1				
2	2	1A7020-34710	WHEEL ASSY, W10X26			1	1				
3	3	194181-14180	NUT, M16			4	4				
4	3	194065-34170	WASHER, 16			4	4				
5	3	1A7020-34720	WHEEL ASSY, W10X26			1	1				
6	4	1A7020-34760	RIM ASSY, W10X26			1	1				
7	4	1A7020-34790	DISK, WHEEL			1	1				
8	3	198268-34850	BOLT, M16X70			4	4				
9	2	1A7020-34900	TIRE ASSY, 12.4-26			1	1				
10	3	198133-34730	TUBE, 12.4-26			1	1				
11	3	1A7020-34910	TIRE, REAR 12.4-26			1	1				
12	1	1A7020-34800	TIRE, REAR 12.4-26HR			1	1				
13	2	1A7020-34710	WHEEL ASSY, W10X26			1	1				
14	3	194181-14180	NUT, M16			4	4				
15	3	194065-34170	WASHER, 16			4	4				
16	3	1A7020-34720	WHEEL ASSY, W10X26			1	1				
17	4	1A7020-34760	RIM ASSY, W10X26			1	1				
18	4	1A7020-34790	DISK, WHEEL			1	1				
19	3	198268-34850	BOLT, M16X70			4	4				
20	2	1A7020-34900	TIRE ASSY, 12.4-26			1	1				
21	3	198133-34730	TUBE, 12.4-26			1	1				
22	3	1A7020-34910	TIRE, REAR 12.4-26			1	1				

Remarks
* Applied to the following models.
EG330, EG334S

N:Old $\xleftarrow[\text{No}]{\text{Yes}}$ New, Q:Old $\xleftarrow[\text{Yes}]{\text{No}}$ New, R:Old $\xleftarrow[\text{Yes}]{\text{Yes}}$ New, S:Old $\xleftarrow[\text{No}]{\text{No}}$ New, W:Add, Z:Discontinued, F:Interchangeable by set, K:Q'ty Change

Copyright (C) 2014 YANMAR CO., LTD. All RightsReserved.

Fig.93. REAR WHEEL TIRE

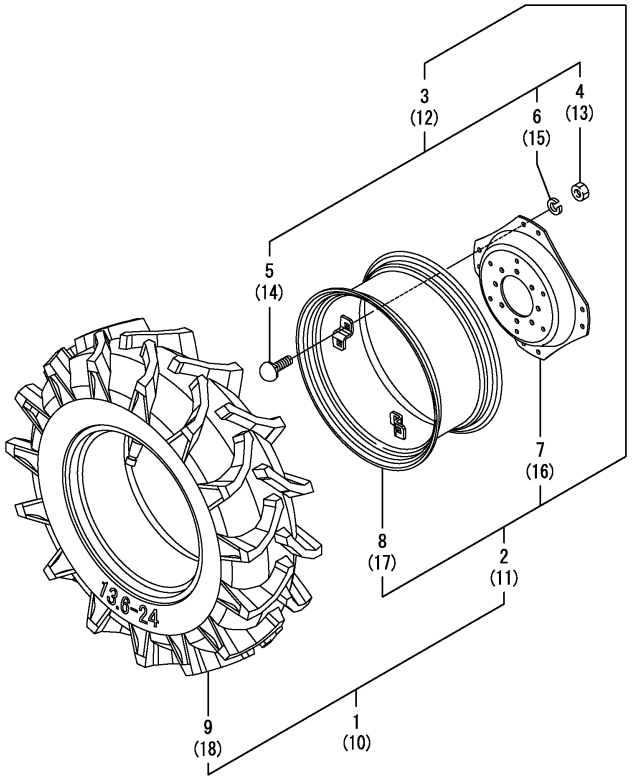

(A)=EG326Y (D)=EG334Y
(B)=EG328Y (E)=
(C)=EG330Y (F)=

No.	Lev.	Parts No.	Description	Q'ty (A)	(B)	(C)	(D)	(E)	(F)	I	R
1	1	1A7170-34700	TIRE, REAR 13.6-24HL				1				
2	2	1A7930-34760	WHEEL KIT, W11X24				1				
3	3	198255-34100	BOLT KIT, M16X35				1				
4	4	194181-14180	NUT, M16				4				
5	4	194681-14790	BOLT, M16X35				4				
6	4	194065-34170	WASHER, 16				4				
7	3	194275-34810	DISC				1				
8	3	1A7930-34820	RIM, W11X24				1				
9	2	1A7170-34900	TIRE ASSY, 13.6-24 H				1				
10	1	1A7170-34800	TIRE, REAR 13.6-24HR				1				
11	2	1A7930-34760	WHEEL KIT, W11X24				1				
12	3	198255-34100	BOLT KIT, M16X35				1				
13	4	194181-14180	NUT, M16				4				
14	4	194681-14790	BOLT, M16X35				4				
15	4	194065-34170	WASHER, 16				4				
16	3	194275-34810	DISC				1				
17	3	1A7930-34820	RIM, W11X24				1				
18	2	1A7170-34900	TIRE ASSY, 13.6-24 H				1				

Remarks
* Applied to the following models.
EG334

N:Old $\xleftarrow[\text{No}]{\text{Yes}}$ New, Q:Old $\xleftarrow[\text{Yes}]{\text{No}}$ New, R:Old $\xleftrightarrow[\text{Yes}]{\text{Yes}}$ New, S:Old $\xleftrightarrow[\text{No}]{\text{No}}$ New, W:Add, Z:Discontinued, F:Interchangeable by set, K:Q'ty Change

Copyright (C) 2014 YANMAR CO., LTD. All RightsReserved.

Fig.235. REAR WHEEL TIRE(K

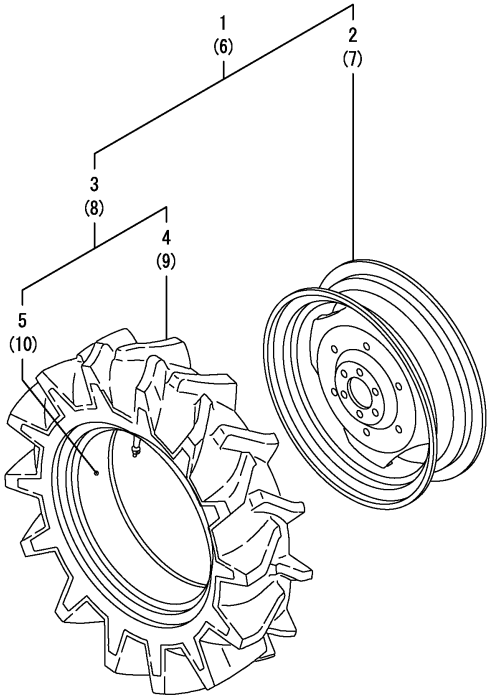

(A)=EG326Y (D)=EG334Y
(B)=EG328Y (E)=
(C)=EG330Y (F)=

No.	Lev.	Parts No.	Description	Q'ty (A)	(B)	(C)	(D)	(E)	(F)	I	R
1	1	198196-34700	TIRE KIT, REAR L			1					
2	2	194150-34650	WHEEL			1					
3	2	198196-34900	TIRE ASSY, 9.5-24 H			1					
4	3	198196-34910	TIRE, 9.5-24 4 T13H			1					
5	3	194080-34950	TUBE			1					
6	1	198196-34800	TIRE KIT, REAR R			1					
7	2	194150-34650	WHEEL			1					
8	2	198196-34900	TIRE ASSY, 9.5-24 H			1					
9	3	198196-34910	TIRE, 9.5-24 4 T13H			1					
10	3	194080-34950	TUBE			1					

Remarks
* Applied to the following models.
EG330K

N:Old $\xleftarrow[\text{No}]{\text{Yes}}$ New, Q:Old $\xleftarrow[\text{Yes}]{\text{No}}$ New, R:Old $\xleftarrow[\text{Yes}]{\text{Yes}}$ New, S:Old $\xleftarrow[\text{No}]{\text{No}}$ New, W:Add, Z:Discontinued, F:Interchangeable by set, K:Q'ty Change

Copyright (C) 2014 YANMAR CO., LTD. All RightsReserved.

Fig.236. REAR WHEEL TIRE(KW)

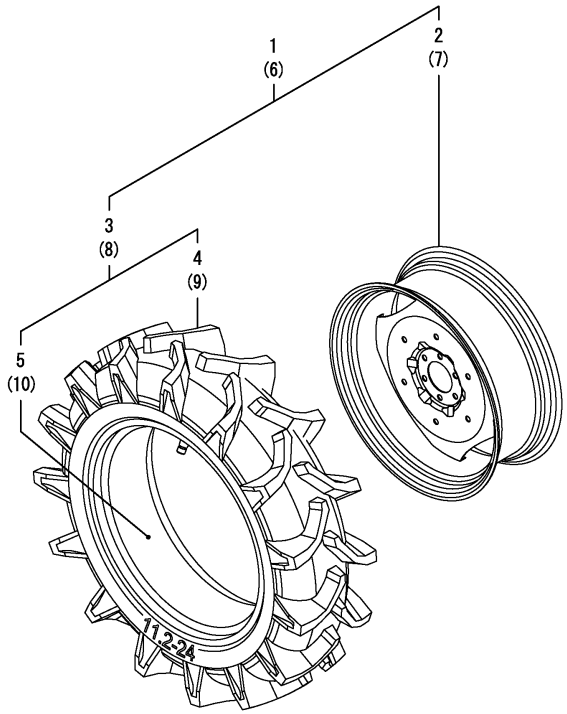

(A)=EG326Y (D)=EG334Y
(B)=EG328Y (E)=
(C)=EG330Y (F)=

No.	Lev.	Parts No.	Description	Q'ty (A)	(B)	(C)	(D)	(E)	(F)	I	R
1	1	1A7000-34760	TIRE, REAR 11.2-24HL			1	1				
2	2	1A7010-34650	WHEEL, W9X24			1	1				
3	2	1A7000-34950	TIRE ASSY, 11.2-24 H			1	1				
4	3	1A7000-34960	TIRE, REAR 11.2-24-4			1	1				
5	3	1A7000-34970	TUBE, 11.2-24			1	1				
6	1	1A7000-34860	TIRE, REAR 11.2-24HR			1	1				
7	2	1A7010-34650	WHEEL, W9X24			1	1				
8	2	1A7000-34950	TIRE ASSY, 11.2-24 H			1	1				
9	3	1A7000-34960	TIRE, REAR 11.2-24-4			1	1				
10	3	1A7000-34970	TUBE, 11.2-24			1	1				

Remarks
* Applied to the following models.
EG330KW, EG334KW

N:Old $\xleftrightarrow[\text{No}]{\text{Yes}}$ New, Q:Old $\xleftrightarrow[\text{Yes}]{\text{No}}$ New, R:Old $\xleftrightarrow[\text{Yes}]{\text{Yes}}$ New, S:Old $\xleftrightarrow[\text{No}]{\text{No}}$ New, W:Add, Z:Discontinued, F:Interchangeable by set, K:Q'ty Change

Copyright (C) 2014 YANMAR CO., LTD. All RightsReserved.

Fig.277. REAR WHEEL TIRE

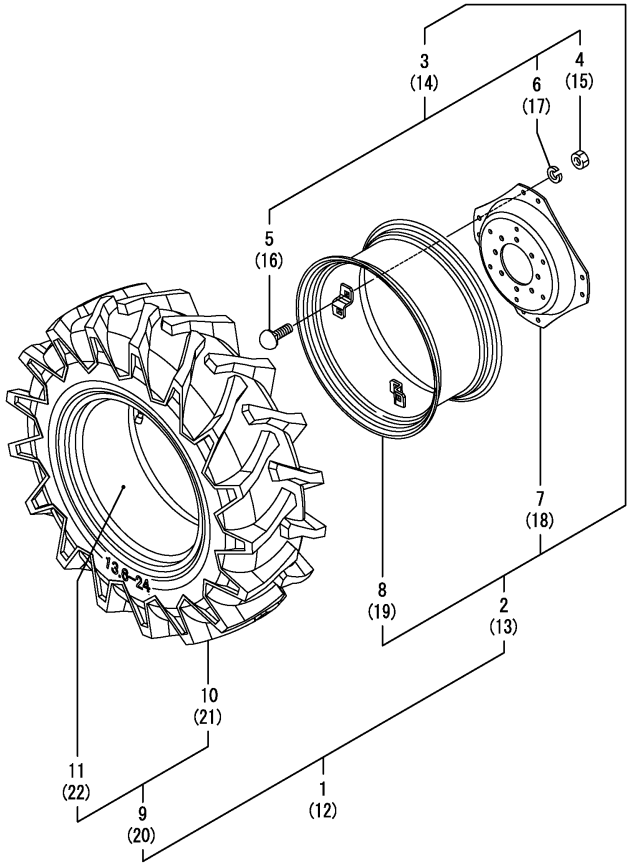

(A)=EG326Y
(B)=EG328Y
(C)=EG330Y
(D)=EG334Y
(E)=
(F)=

No.	Lev.	Parts No.	Description	Q'ty (A)	(B)	(C)	(D)	(E)	(F)	I	R
1	1	1A7930-34750	TIRE, REAR 13.6-24LL			1	1				
2	2	1A7930-34760	WHEEL KIT, W11X24			1	1				
3	3	198255-34100	BOLT KIT, M16X35			1	1				
4	4	194181-14180	NUT, M16			4	4				
5	4	194681-14790	BOLT, M16X35			4	4				
6	4	194065-34170	WASHER, 16			4	4				
7	3	194275-34810	DISC			1	1				
8	3	1A7930-34820	RIM, W11X24			1	1				
9	2	198242-34950	TIRE KIT, 13.6-24			1	1				
10	3	198242-34960-1	TIRE KIT, 13.6-24 4			1	1				
11	3	198242-34970	TUBE, 13.6-24			1	1				
12	1	1A7930-34850	TIRE, REAR 13.6-24LR			1	1				
13	2	1A7930-34760	WHEEL KIT, W11X24			1	1				
14	3	198255-34100	BOLT KIT, M16X35			1	1				
15	4	194181-14180	NUT, M16			4	4				
16	4	194681-14790	BOLT, M16X35			4	4				
17	4	194065-34170	WASHER, 16			4	4				
18	3	194275-34810	DISC			1	1				
19	3	1A7930-34820	RIM, W11X24			1	1				
20	2	198242-34950	TIRE KIT, 13.6-24			1	1				
21	3	198242-34960-1	TIRE KIT, 13.6-24 4			1	1				
22	3	198242-34970	TUBE, 13.6-24			1	1				

Remarks
* Applied to the following models.
EG330L, EG334L

N:Old $\overset{\text{Yes}}{\underset{\text{No}}{\leftrightarrow}}$ New, Q:Old $\overset{\text{No}}{\underset{\text{Yes}}{\leftrightarrow}}$ New, R:Old $\overset{\text{Yes}}{\underset{\text{Yes}}{\leftrightarrow}}$ New, S:Old $\overset{\text{No}}{\underset{\text{No}}{\leftrightarrow}}$ New, W:Add, Z:Discontinued, F:Interchangeable by set, K:Q'ty Change

Copyright (C) 2014 YANMAR CO., LTD. All RightsReserved.

Fig.278. REAR WHEEL TIRE

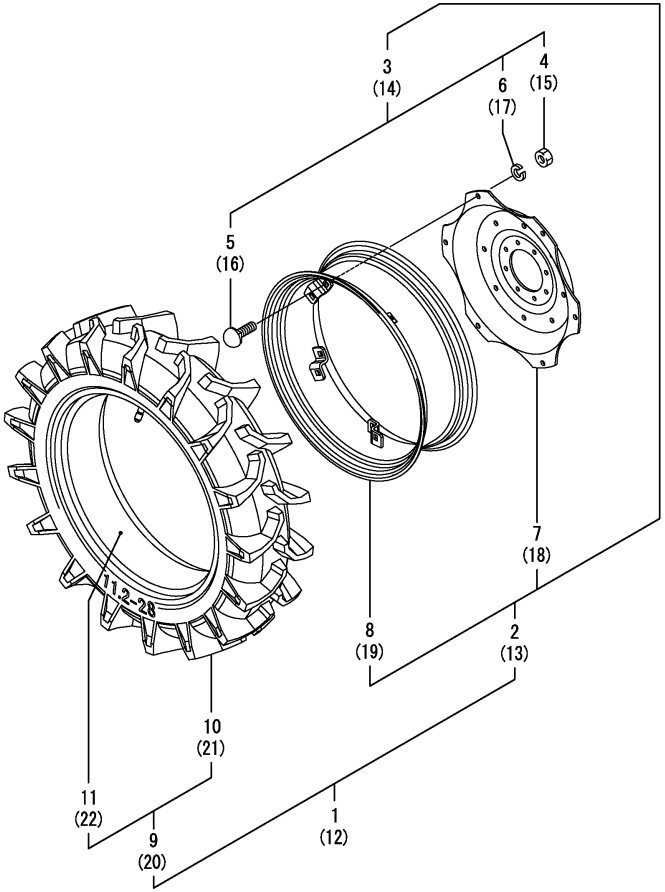

Remarks
* Applied to the following models.
EG330S

(A)=EG326Y (D)=EG334Y
(B)=EG328Y (E)=
(C)=EG330Y (F)=

No.	Lev.	Parts No.	Description	Q'ty (A)	(B)	(C)	(D)	(E)	(F)	I	R
1	1	1A7300-34740	TIRE ASSY, 11.2-28HL			1					
1-1	1	1A7160-34740	TIRE KIT, 11.2-28HL			1				R	
			(C=F300211)								
2	2	1A7300-34750	WHEEL ASSY, W9X28			1					
3	3	198460-34100	BOLT KIT			1					
4	4	194181-14180	NUT, M16			6					
5	4	194681-14790	BOLT, M16X35			6					
6	4	194065-34170	WASHER, 16			6					
7	3	198146-34740	DISK, W11X28D			1					
8	3	1A7300-34890	RIM, W9-28			1					
9	2	198133-34760	TIRE ASSY, REAR			1					
9-1	2	194615-34900	TIRE ASSY, 11.2-28H			1				R	
			(C=F300211)								
10	3	198133-34770	TIRE, 11.2-28 4AT-30			1					
10-1	3	194615-34910	TIRE, REAR			1				R	
			(C=F300211)								
11	3	198133-34780	TUBE, 11.2-28			1					
11-1	3	198107-34920	TUBE, 11.2-28			1				R	
			(C=F300211)								
12	1	1A7300-34840	TIRE ASSY, 11.2-28HR			1					
12-1	1	1A7160-34840	TIRE KIT, 11.2-28HR			1				R	
			(C=F300211)								
13	2	1A7300-34750	WHEEL ASSY, W9X28			1					
14	3	198460-34100	BOLT KIT			1					
15	4	194181-14180	NUT, M16			6					
16	4	194681-14790	BOLT, M16X35			6					
17	4	194065-34170	WASHER, 16			6					
18	3	198146-34740	DISK, W11X28D			1					
19	3	1A7300-34890	RIM, W9-28			1					
20	2	198133-34760	TIRE ASSY, REAR			1					
20-1	2	194615-34900	TIRE ASSY, 11.2-28H			1				R	
			(C=F300211)								
21	3	198133-34770	TIRE, 11.2-28 4AT-30			1					
21-1	3	194615-34910	TIRE, REAR			1				R	
			(C=F300211)								
22	3	198133-34780	TUBE, 11.2-28			1					
22-1	3	198107-34920	TUBE, 11.2-28			1				R	
			(C=F300211)								

N:Old $\xleftarrow[\text{No}]{\text{Yes}}$ New, Q:Old $\xleftarrow[\text{Yes}]{\text{No}}$ New, R:Old $\xleftarrow[\text{Yes}]{\text{Yes}}$ New, S:Old $\xleftarrow[\text{No}]{\text{No}}$ New, W:Add, Z:Discontinued, F:Interchangeable by set, K:Q'ty Change

Copyright (C) 2014 YANMAR CO., LTD. All RightsReserved.

Fig.282. REAR WHEEL TIRE

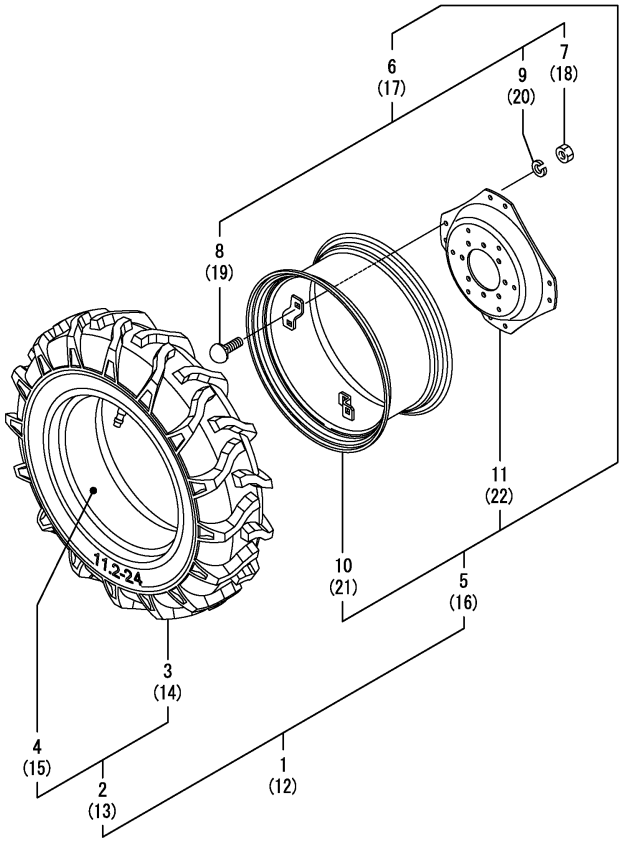

Remarks
* Applied to the following models.
EG334KWA

(A)=EG326Y (D)=EG334Y
(B)=EG328Y (E)=
(C)=EG330Y (F)=

No.	Lev.	Parts No.	Description	Q'ty (A)	(B)	(C)	(D)	(E)	(F)	I	R
1	1	198081-34700	TIRE KIT, 11.2-24LL				1				
2	2	194432-34900	TIRE, REAR				1				
3	3	194432-34910	TIRE, REAR				1				
4	3	194432-34920	TUBE				1				
5	2	194240-35231	WHEEL ASSY, DCW9X34W				1				
6	3	198255-34100	BOLT KIT, M16X35				1				
7	4	194181-14180	NUT, M16				4				
8	4	194681-14790	BOLT, M16X35				4				
9	4	194065-34170	WASHER, 16				4				
10	3	194130-34891-1	RIM, W9-24				1				
11	3	194240-35120-1	DISK, WHEEL				1				
12	1	198081-34800	TIRE KIT, 11.2-24LR				1				
13	2	194432-34900	TIRE, REAR				1				
14	3	194432-34910	TIRE, REAR				1				
15	3	194432-34920	TUBE				1				
16	2	194240-35231	WHEEL ASSY, DCW9X34W				1				
17	3	198255-34100	BOLT KIT, M16X35				1				
18	4	194181-14180	NUT, M16				4				
19	4	194681-14790	BOLT, M16X35				4				
20	4	194065-34170	WASHER, 16				4				
21	3	194130-34891-1	RIM, W9-24				1				
22	3	194240-35120-1	DISK, WHEEL				1				

N:Old $\overset{\text{Yes}}{\underset{\text{No}}{\leftrightarrows}}$ New, Q:Old $\overset{\text{No}}{\underset{\text{Yes}}{\leftrightarrows}}$ New, R:Old $\overset{\text{Yes}}{\underset{\text{Yes}}{\leftrightarrows}}$ New, S:Old $\overset{\text{No}}{\underset{\text{No}}{\leftrightarrows}}$ New, W:Add, Z:Discontinued, F:Interchangeable by set, K:Q'ty Change

Copyright (C) 2014 YANMAR CO., LTD. All RightsReserved.

Fig.283. REAR WHEEL TIRE

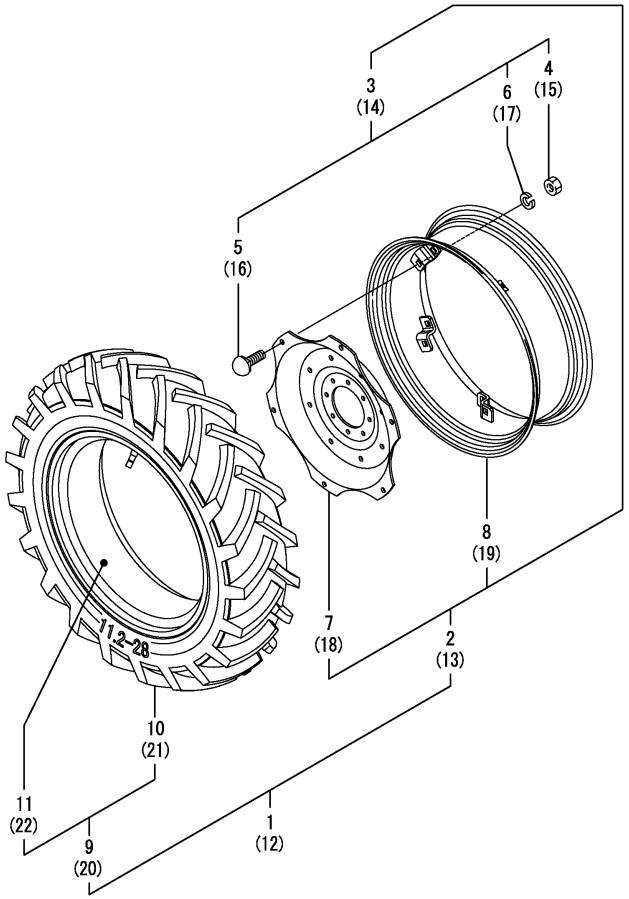

(A)=EG326Y (D)=EG334Y
(B)=EG328Y (E)=
(C)=EG330Y (F)=

No.	Lev.	Parts No.	Description	Q'ty (A)	(B)	(C)	(D)	(E)	(F)	I	R
1	1	1A7300-34720	TIRE ASSY, 11.2-28L				1				
2	2	1A7300-34750	WHEEL ASSY, W9X28				1				
3	3	198460-34100	BOLT KIT				1				
4	4	194181-14180	NUT, M16				6				
5	4	194681-14790	BOLT, M16X35				6				
6	4	194065-34170	WASHER, 16				6				
7	3	198146-34740	DISK, W11X28D				1				
8	3	1A7300-34890	RIM, W9-28				1				
9	2	198249-34900	TIRE ASSY, 11.2-28				1				
10	3	198249-34910	TIRE, 11.2-28 4 FARM				1				
11	3	194615-34920	TUBE, 11.2-28				1				
12	1	1A7300-34820	TIRE ASSY, 11.2-28R				1				
13	2	1A7300-34750	WHEEL ASSY, W9X28				1				
14	3	198460-34100	BOLT KIT				1				
15	4	194181-14180	NUT, M16				6				
16	4	194681-14790	BOLT, M16X35				6				
17	4	194065-34170	WASHER, 16				6				
18	3	198146-34740	DISK, W11X28D				1				
19	3	1A7300-34890	RIM, W9-28				1				
20	2	198249-34900	TIRE ASSY, 11.2-28				1				
21	3	198249-34910	TIRE, 11.2-28 4 FARM				1				
22	3	194615-34920	TUBE, 11.2-28				1				

Remarks
* Applied to the following models.
EG334SL

N:Old $\xleftrightarrow[\text{No}]{\text{Yes}}$ New, Q:Old $\xleftrightarrow[\text{Yes}]{\text{No}}$ New, R:Old $\xleftrightarrow[\text{Yes}]{\text{Yes}}$ New, S:Old $\xleftrightarrow[\text{No}]{\text{No}}$ New, W:Add, Z:Discontinued, F:Interchangeable by set, K:Q'ty Change

Copyright (C) 2014 YANMAR CO., LTD. All RightsReserved.

Fig.94. HUB BOLT

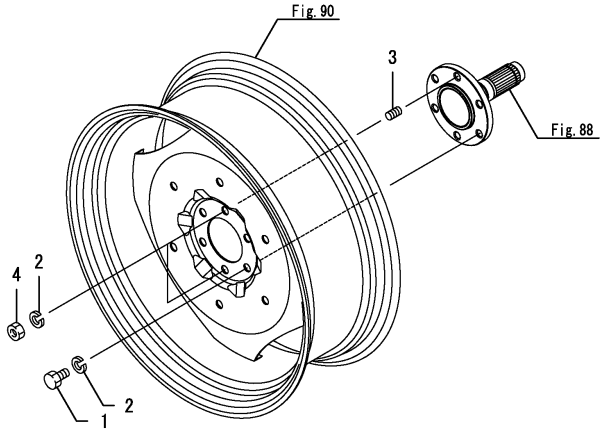

(A)=EG326Y (D)=EG334Y
(B)=EG328Y (E)=
(C)=EG330Y (F)=

No.	Lev.	Parts No.	Description	Q'ty (A)	(B)	(C)	(D)	(E)	(F)	I	R
1	1	194555-34180	BOLT, M16X30	8	8	8	8				
2	1	194555-34190	WASHER, SPRING 16	12	12	12	12				
3	1	194555-34200	STUD	4	4	4	4				
4	1	194555-34210	NUT, M16	4	4	4	4				

Remarks
* Applied to the following models.
EG326, EG328
EG330A, EG330K, EG330KW, EG334A, EG334KW, EG334KWA

N:Old $\xleftrightarrow[\text{No}]{\text{Yes}}$ New, Q:Old $\xleftrightarrow[\text{Yes}]{\text{No}}$ New, R:Old $\xleftrightarrow[\text{Yes}]{\text{Yes}}$ New, S:Old $\xleftrightarrow[\text{No}]{\text{No}}$ New, W:Add, Z:Discontinued, F:Interchangeable by set, K:Q'ty Change

Copyright (C) 2014 YANMAR CO., LTD. All RightsReserved.

Fig.95. HUB BOLT

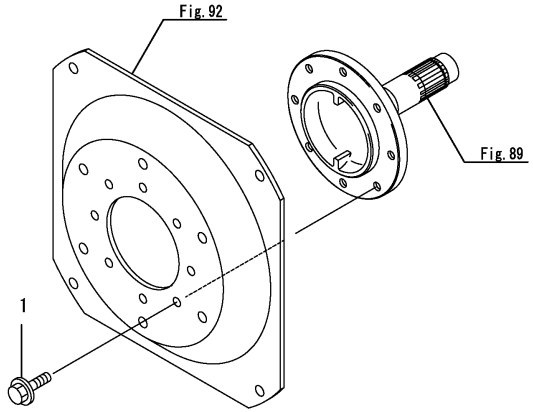

(A)=EG326Y (D)=EG334Y
(B)=EG328Y (E)=
(C)=EG330Y (F)=

No.	Lev.	Parts No.	Description	Q'ty (A)	(B)	(C)	(D)	(E)	(F)	I	R
1	1	198133-34130	BOLT, M14X30			16	16				

Remarks
* Applied to the following models.
EG330, EG334

N:Old $\xleftrightarrow[\text{No}]{\text{Yes}}$ New, Q:Old $\xleftrightarrow[\text{Yes}]{\text{No}}$ New, R:Old $\xleftrightarrow[\text{Yes}]{\text{Yes}}$ New, S:Old $\xleftrightarrow[\text{No}]{\text{No}}$ New, W:Add, Z:Discontinued, F:Interchangeable by set, K:Q'ty Change

Copyright (C) 2014 YANMAR CO., LTD. All RightsReserved.

Fig.96. BRAKE

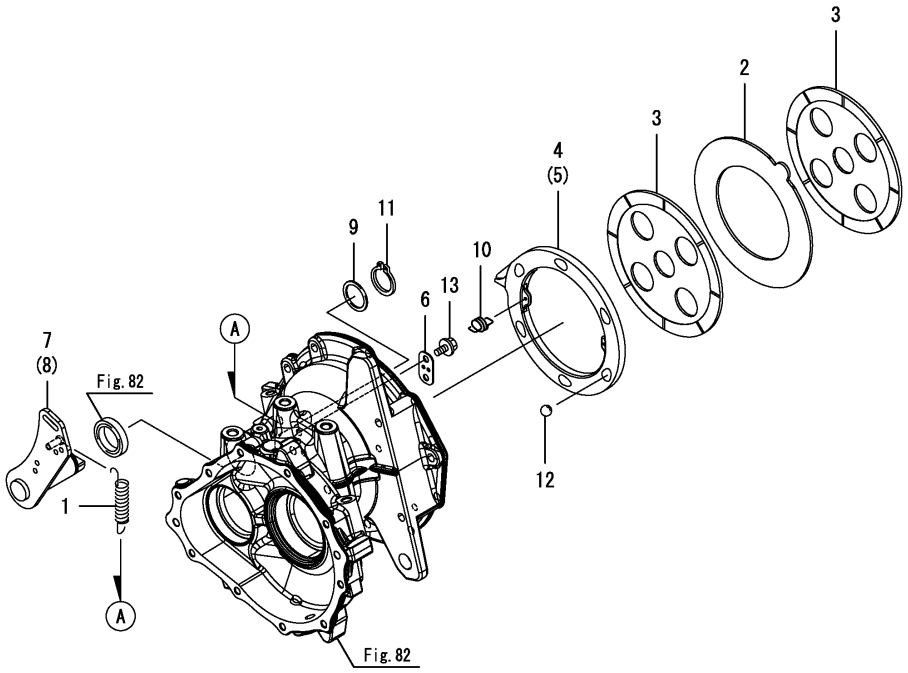

(A)=EG326Y (D)=EG334Y
(B)=EG328Y (E)=
(C)=EG330Y (F)=

No.	Lev.	Parts No.	Description	Q'ty (A)	(B)	(C)	(D)	(E)	(F)	I	R
1	1	1A7880-27570	SPRING	2	2	2	2				
2	1	1A7180-36100	PLATE, STEEL	2	2	2	2				
3	1	1A7180-36110	PLATE, FRICTION	4	4	4	4				
4	1	1A7180-36120	ACTUATOR	1	1	1	1				
5	1	1A7180-36130	ACTUATOR	1	1	1	1				
6	1	1A7180-36160	PLATE, SPRING HOOK	4	4	4	4				
7	1	1A7180-36201	LEVER ASSY, CAM L	1	1	1	1				
8	1	1A7180-36211	LEVER ASSY, CAM R	1	1	1	1				
9	1	1A7180-36240	WASHER, THRUST	2	2	2	2				
10	1	194327-36530	SPRING, RETURN	4	4	4	4				
11	1	22242-000320	RING, 32	2	2	2	2				
12	1	24190-180001	BALL, STEEL 9/16	12	12	12	12				
13	1	26106-080122	BOLT, M8X 12 PLATED	8	8	8	8				

N:Old $\overset{\text{Yes}}{\underset{\text{No}}{\leftrightarrows}}$ New, Q:Old $\overset{\text{No}}{\underset{\text{Yes}}{\leftrightarrows}}$ New, R:Old $\overset{\text{Yes}}{\underset{\text{Yes}}{\leftrightarrows}}$ New, S:Old $\overset{\text{No}}{\underset{\text{No}}{\leftrightarrows}}$ New, W:Add, Z:Discontinued, F:Interchangeable by set, K:Q'ty Change

Copyright (C) 2014 YANMAR CO., LTD. All RightsReserved.

Fig.97. BRAKE PIPE

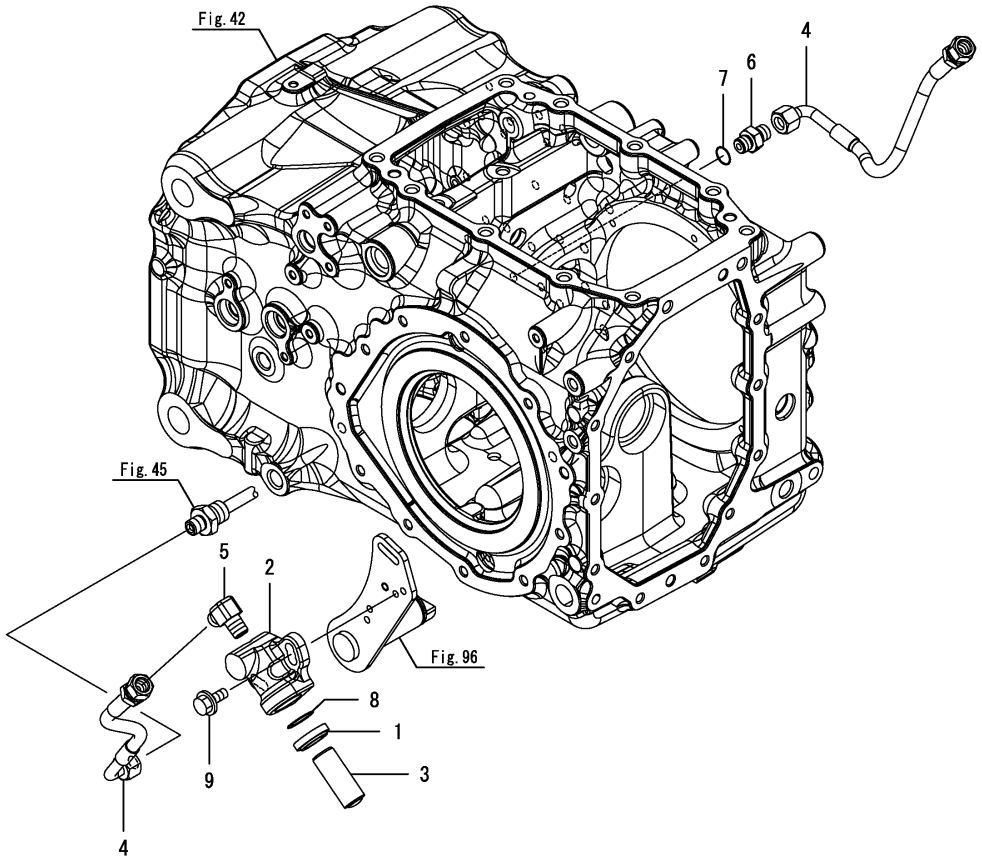

(A)=EG326Y (D)=EG334Y
(B)=EG328Y (E)=
(C)=EG330Y (F)=

No.	Lev.	Parts No.	Description	Q'ty (A)	(B)	(C)	(D)	(E)	(F)	I	R
1	1	198475-36810	SEAL, DUST 20	2	2	2	2				
2	1	1A7180-36820	CYLINDER, BRAKE	2	2	2	2				
3	1	198475-36840	PISTON, BRAKE	2	2	2	2				
3-1	1	1A7180-36840	PISTON, BRAKE	2	2	2	2			N	
	(A=F100008)	(B=F200001)	(C=F300001) (D=F400004)								
4	1	1A7180-36850	HOSE, PRESSURE	2	2	2	2				
5	1	194065-38300	ELBOW, 90 1/4	2	2	2	2				
6	1	1A7260-43810	ADAPTER, G1/4	1	1	1	1				
7	1	24311-000110	O-RING, 1AP11.0	1	1	1	1				
8	1	24311-000200	O-RING, 1AP20.0	2	2	2	2				
9	1	26106-080202	BOLT, M8X 20 PLATED	4	4	4	4				

N:Old $\frac{\text{Yes}}{\text{No}}$ New, Q:Old $\frac{\text{No}}{\text{Yes}}$ New, R:Old $\frac{\text{Yes}}{\text{Yes}}$ New, S:Old $\frac{\text{No}}{\text{No}}$ New, W:Add, Z:Discontinued, F:Interchangeable by set, K:Q'ty Change

Copyright (C) 2014 YANMAR CO., LTD. All RightsReserved.

Fig.98. PEDAL

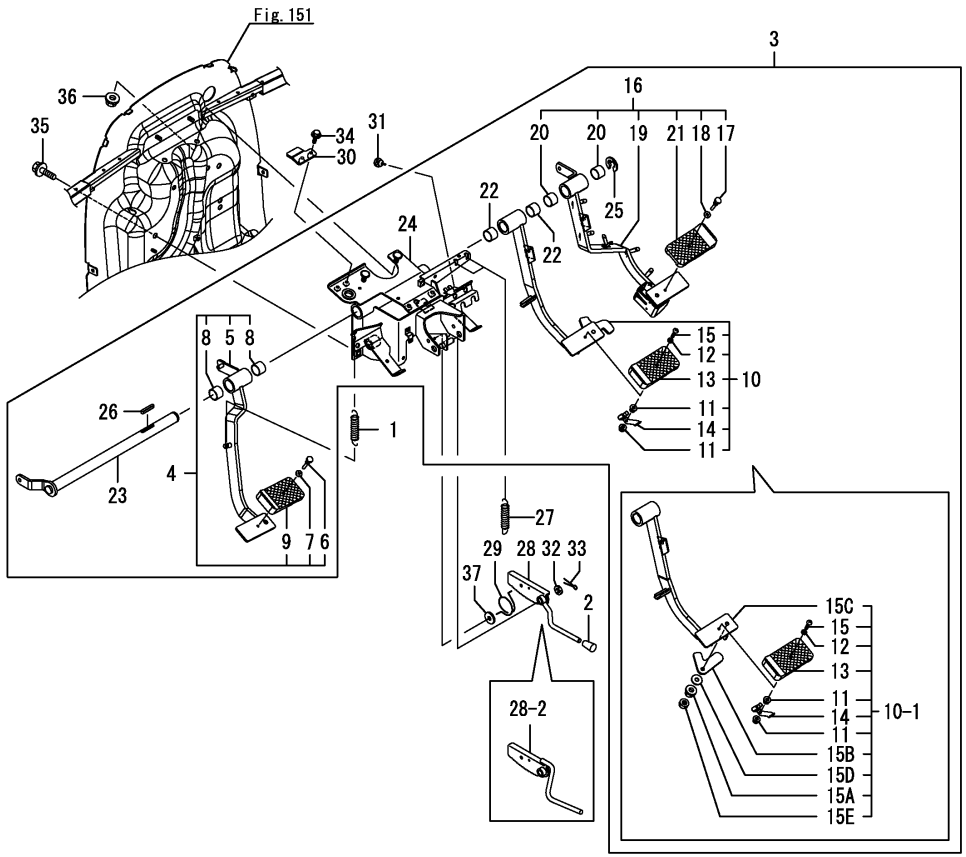

(A)=EG326Y (D)=EG334Y
(B)=EG328Y (E)=
(C)=EG330Y (F)=

No.	Lev.	Parts No.	Description	Q'ty (A)	(B)	(C)	(D)	(E)	(F)	I	R
1	1	1A6210-22600	SPRING, MAIN CLUTCH	1	1	1	1				
2	1	1A6750-37200	KNOB, PARKING BRAKE	1	1	1	1				
3	1	1A7180-37201	PEDAL	1	1	1	1				
3-1	1	1A7180-37202	PEDAL UNIT,	1	1	1	1			N	
	(A=F090706)	(B=F080594)	(C=F071251) (D=F061080)								
3-2	1	1A7180-37203	PEDAL UNIT,	1	1	1	1			S	
	(A=F090706)	(B=F080594)	(C=F071677) (D=F061533)								
4	2	1A7180-22400	PEDAL, CLUTCH	1	1	1	1				
5	3	1A7180-22410	PEDAL ASSY, CLUTCH	1	1	1	1				
6	3	198133-22510	RIVET, PEDAL HEAD	1	1	1	1				
7	3	198133-22530	WASHER, RIVET	1	1	1	1				
8	3	198071-37490	BUSH, 25X28X20	2	2	2	2				
9	3	198071-37510	COVER, HEAD	1	1	1	1				
10	2	1A7260-37310-1	PEDAL, BRAKE L	1	1	1	1				
10-1	2	1A7180-37300	PEDAL UNIT, BRAKE L	1	1	1	1			S	
	(A=F090706)	(B=F080594)	(C=F071677) (D=F061533)								
11	3	194990-22120	NUT, M5	2	2	2	2				
12	3	198133-22530	WASHER, RIVET	1	1	1	1				
13	3	198071-37510	COVER, HEAD	1	1	1	1				
14	3	198475-37770	SPRING, LOCK	1	1	1	1				
15	3	198475-37780	SCREW, M5X25	1	1	1	1				
15A	3	194990-22140	NUT, M8	1	1	1	1			W	
	(A=F090706)	(B=F080594)	(C=F071677) (D=F061533)								
15B	3	198200-37240	CONNECTOR	1	1	1	1			W	
	(A=F090706)	(B=F080594)	(C=F071677) (D=F061533)								
15C	3	1A7180-37310	PEDAL ASSY, BRAKE L	1	1	1	1			W	
	(A=F090706)	(B=F080594)	(C=F071677) (D=F061533)								
15D	3	22157-080000	WASHER, 8	1	1	1	1			W	
	(A=F090706)	(B=F080594)	(C=F071677) (D=F061533)								
15E	3	26716-080002	NUT, M8	1	1	1	1			W	
	(A=F090706)	(B=F080594)	(C=F071677) (D=F061533)								
16	2	1A7180-37410	PEDAL, BRAKE R	1	1	1	1				
16-1	2	1A7180-37411	PEDAL UNIT, BRAKE R	1	1	1	1			S	
	(A=F090706)	(B=F080594)	(C=F071677) (D=F061533)								
17	3	198133-22510	RIVET, PEDAL HEAD	1	1	1	1				
18	3	198133-22530	WASHER, RIVET	1	1	1	1				
19	3	1A7180-37420	PEDAL ASSY, BRAKE R	1	1	1	1				
19-1	3	1A7180-37421	PEDAL ASSY, BRAKE R	1	1	1	1			N	
	(A=F090706)	(B=F080594)	(C=F071677) (D=F061533)								
20	3	198071-37490	BUSH, 25X28X20	2	2	2	2				
21	3	198071-37510	COVER, HEAD	1	1	1	1				
22	2	198071-37490	BUSH, 25X28X20	2	2	2	2				
23	2	1A7180-37550	SHAFT, BRAKE	1	1	1	1				
23-1	2	1A7180-37551	SHAFT ASSY, BRAKE	1	1	1	1			N	
	(A=F090706)	(B=F080594)	(C=F071251) (D=F061080)								
24	2	1A7180-61611	STAY ASSY, SHAFT	1	1	1	1				
25	2	22272-000190	RING, E-19	1	1	1	1				
26	2	22512-070400	KEY, 7X 40	1	1	1	1				
27	1	198290-37510	SPRING, RETURN	2	2	2	2				
28	1	1A7260-37650	LEVER, LOCK	1	1	1	1				
28-1	1	1A7260-37651	LEVER, LOCK BRAKE	1	1	1	1			N	

N:Old $\overset{\text{Yes}}{\underset{\text{No}}{\leftrightarrows}}$ New, Q:Old $\overset{\text{No}}{\underset{\text{Yes}}{\leftrightarrows}}$ New, R:Old $\overset{\text{Yes}}{\underset{\text{Yes}}{\leftrightarrows}}$ New, S:Old $\overset{\text{No}}{\underset{\text{No}}{\leftrightarrows}}$ New, W:Add, Z:Discontinued, F:Interchangeable by set, K:Q'ty Change

++ CONTINUE ++

Copyright (C) 2014 YANMAR CO., LTD. All RightsReserved.

Fig.98. PEDAL

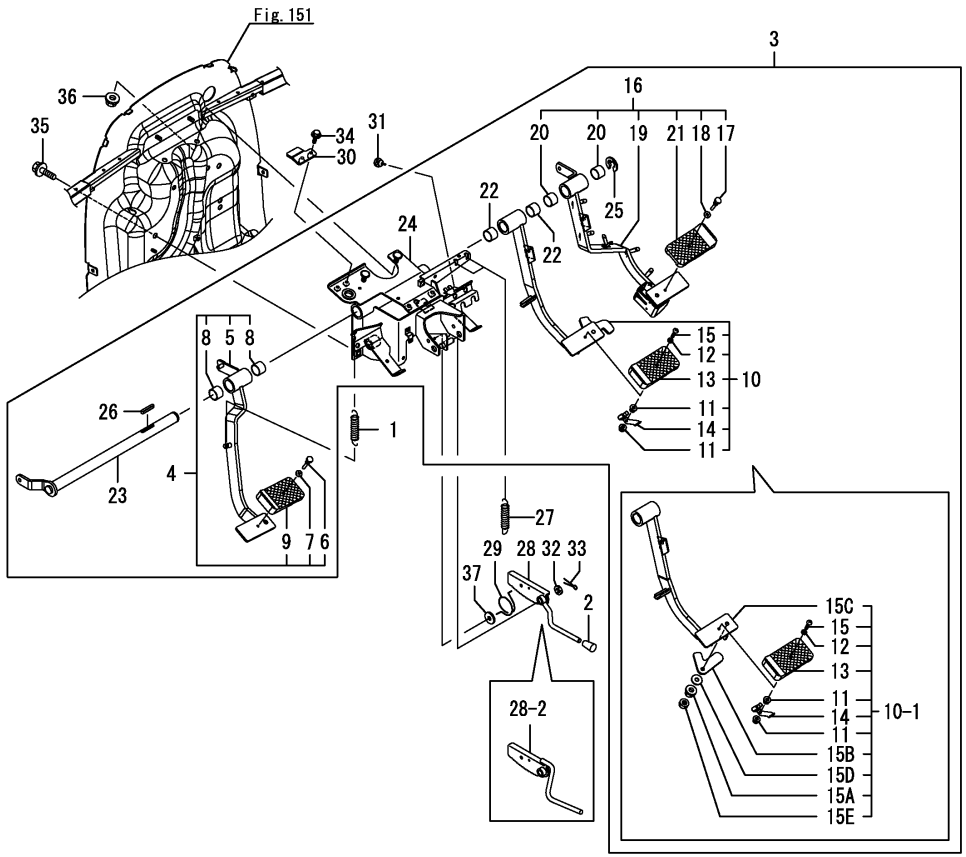

(A)=EG326Y (D)=EG334Y
(B)=EG328Y (E)=
(C)=EG330Y (F)=

No.	Lev.	Parts No.	Description	Q'ty (A)	(B)	(C)	(D)	(E)	(F)	I	R
	(A=F090280)	(B=F080263)	(C=F070602) (D=F060531)								
28-2	1	1A7180-37650	LEVER ASSY, LOCK	1	1	1	1			N	
	(A=F090901)	(B=F080756)	(C=F072258) (D=F062139)								
29	1	198475-37690	SPRING, LOCK	1	1	1	1				
30	1	1A7180-61730	STOPPER, PEDAL	1	1	1	1				
31	1	194330-62530	STOPPER, PEDAL	3	3	3	3				
32	1	22137-120000	WASHER, 12	1	1	1	1				
33	1	22417-250300	PIN, COTTER 2.5X30	1	1	1	1				
34	1	26106-060252	BOLT, M6X 25 PLATED	2	2	2	2				
35	1	26106-100202	BOLT, M10X 20 PLATED	2	2	2	2				
36	1	26306-100002	NUT, M10	2	2	2	2				
37	1	22157-060000	WASHER, 6	1	1	1	1			W	
	(A=F090280)	(B=F080263)	(C=F070602) (D=F060531)								

N:Old $\frac{\text{Yes}}{\text{No}}$ New, Q:Old $\frac{\text{No}}{\text{Yes}}$ New, R:Old $\frac{\text{Yes}}{\text{Yes}}$ New, S:Old $\frac{\text{No}}{\text{No}}$ New, W:Add, Z:Discontinued, F:Interchangeable by set, K:Q'ty Change

Copyright (C) 2014 YANMAR CO., LTD. All RightsReserved.

Fig.99. PEDAL LINK(1)

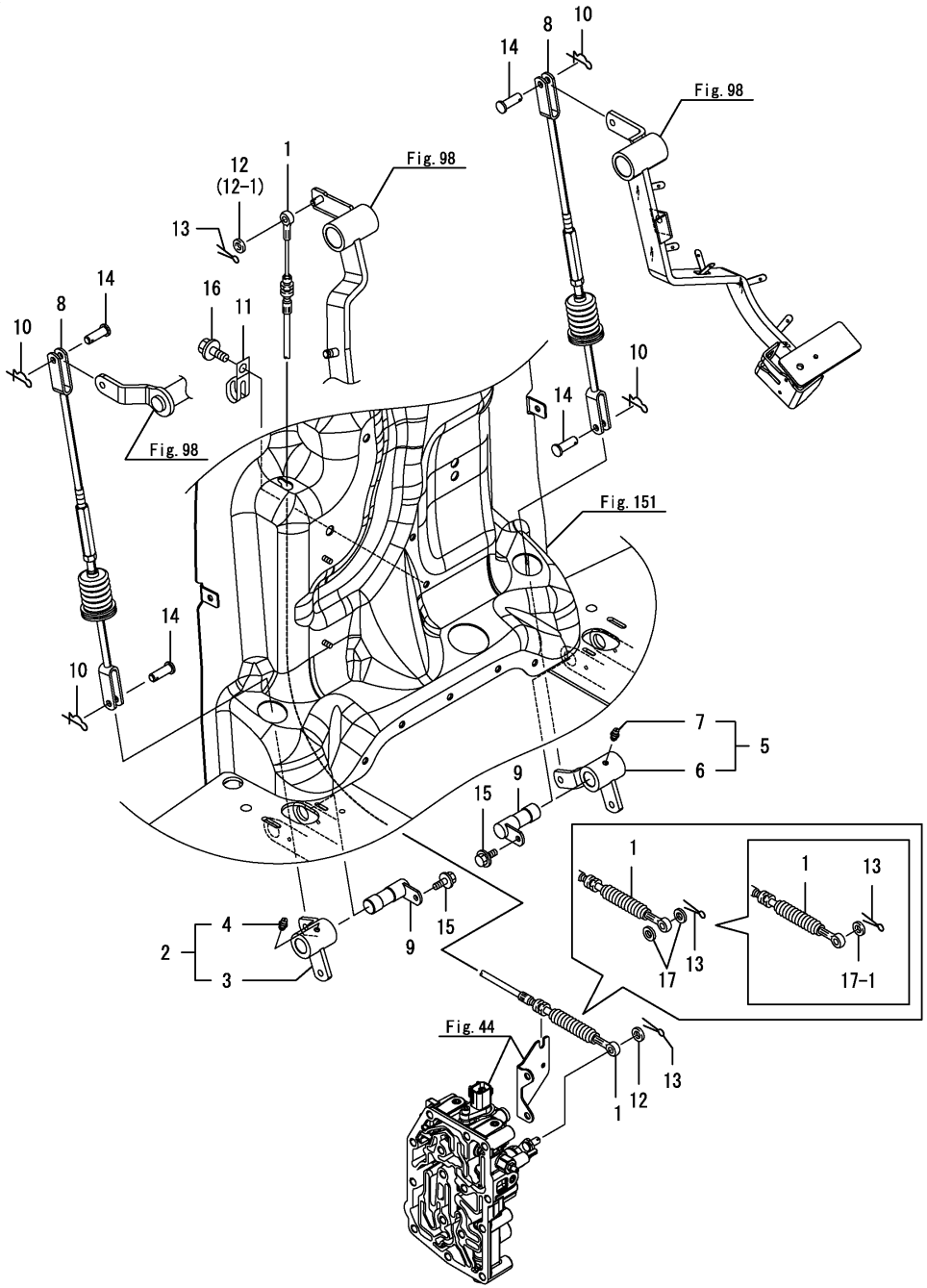

(A)=EG326Y (D)=EG334Y
(B)=EG328Y (E)=
(C)=EG330Y (F)=

No.	Lev.	Parts No.	Description	Q'ty (A)	(B)	(C)	(D)	(E)	(F)	I	R
1	1	1A7180-22520	CABLE ASSY, CLUTCH	1	1	1	1				
2	1	1A7180-37701	ARM ASSY, BRAKE L	1	1	1	1				
3	2	1A7180-37721	ARM, BRAKE L	1	1	1	1				
4	2	24761-010000	NIPPLE, GREASE M6F	1	1	1	1				
5	1	1A7180-37711	ARM ASSY, BRAKE R	1	1	1	1				
6	2	1A7180-37731	ARM, BRAKE R	1	1	1	1				
7	2	24761-010000	NIPPLE, GREASE M6F	1	1	1	1				
8	1	1A7180-37800	ROD ASSY, BRAKE F	2	2	2	2				
9	1	1A7180-37910	SHAFT ASSY, BRAKE	2	2	2	2				
10	1	1C6281-52320	PIN, SNAP 8	4	4	4	4				
11	1	1E6102-83230	CLAMP, CABLE	1	1	1	1				
12	1	22137-080000	WASHER, 8	2	2	2	2				
12-1	1	22137-080000	WASHER, 8	1	1	1	1			K	
	(A=*2011.09)	(B=*2011.09)	(C=*2011.09) (D=*2011.09)								
13	1	22417-200300	PIN, COTTER 2.0X30	2	2	2	2				
14	1	22487-080200	PIN, H 8X 20	4	4	4	4				
15	1	26106-060122	BOLT, M6X 12 PLATED	2	2	2	2				
16	1	26106-080122	BOLT, M8X 12 PLATED	1	1	1	1				
17	1	22117-080000	WASHER, 8	2	2	2	2			W	
	(A=*2011.09)	(B=*2011.09)	(C=*2011.09) (D=*2011.09)								
17-1	1	22137-080000	WASHER, 8	1	1	1	1			N	
	(A=*2011.09)	(B=*2011.09)	(C=*2011.09) (D=*2011.09)								

N:Old $\xleftarrow[\text{No}]{\text{Yes}}$ New, Q:Old $\xleftarrow[\text{Yes}]{\text{No}}$ New, R:Old $\xleftrightarrow[\text{Yes}]{\text{Yes}}$ New, S:Old $\xleftrightarrow[\text{No}]{\text{No}}$ New, W:Add, Z:Discontinued, F:Interchangeable by set, K:Q'ty Change

Copyright (C) 2014 YANMAR CO., LTD. All RightsReserved.

Fig.100. PEDAL LINK(2)

(A)=EG326Y
(B)=EG328Y
(C)=EG330Y
(D)=EG334Y
(E)=
(F)=

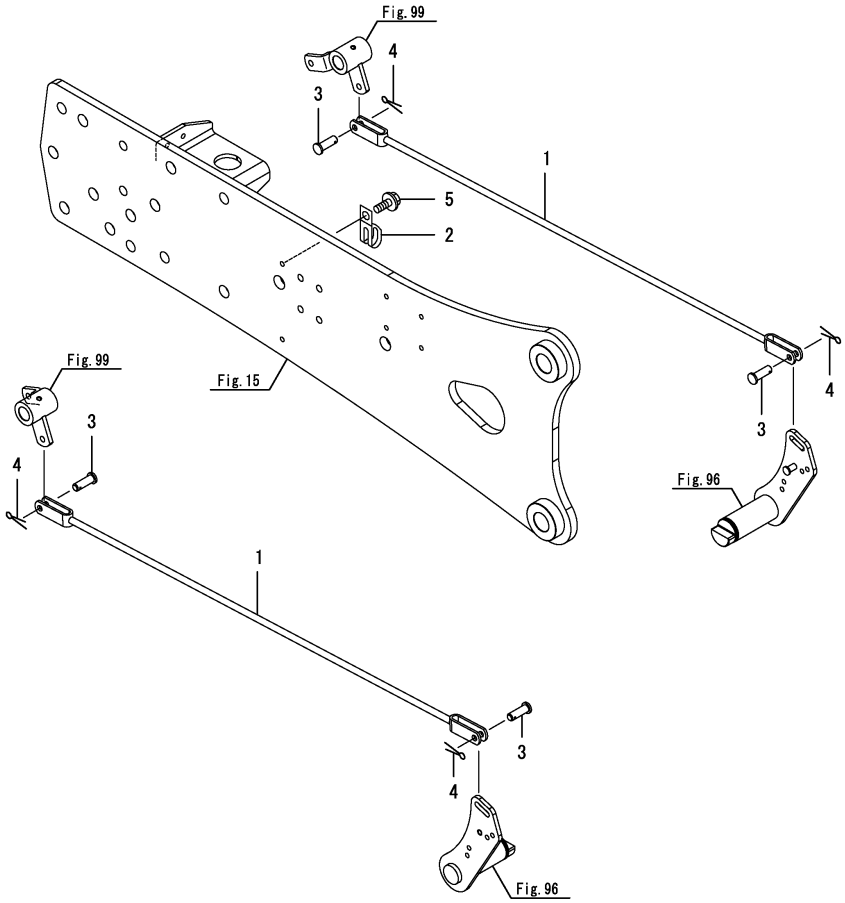

No.	Lev.	Parts No.	Description	Q'ty (A)	(B)	(C)	(D)	(E)	(F)	I	R
1	1	1A7180-37850	ROD, BRAKE R	2	2	2	2				
2	1	194440-51620	CLAMP	1	1	1	1				
3	1	22417-200300	PIN, COTTER 2.0X30	4	4	4	4				
4	1	22487-080200	PIN, H 8X 20	4	4	4	4				
5	1	26106-080162	BOLT, M8X 16 PLATED	1	1	1	1				

Remarks
* Applied to the following models.
EG326, EG328, EG330, EG334
EG330A(Cabin specification), EG334A(Cabin specification)

N:Old $\xleftrightarrow[\text{No}]{\text{Yes}}$ New, Q:Old $\xleftrightarrow[\text{Yes}]{\text{No}}$ New, R:Old $\xleftrightarrow[\text{Yes}]{\text{Yes}}$ New, S:Old $\xleftrightarrow[\text{No}]{\text{No}}$ New, W:Add, Z:Discontinued, F:Interchangeable by set, K:Q'ty Change

Copyright (C) 2014 YANMAR CO., LTD. All RightsReserved.

Fig.237. PEDAL LINK(2) (A,K,KW,KWA)

(A)=EG326Y
(B)=EG328Y
(C)=EG330Y
(D)=EG334Y
(E)=
(F)=

No.	Lev.	Parts No.	Description	Q'ty (A)	(B)	(C)	(D)	(E)	(F)	I	R
1	1	1A7160-37850	ROD, R BRAKE			2	2				
2	1	194440-51620	CLAMP			1	1				
3	1	22417-200300	PIN, COTTER 2.0X30			4	4				
4	1	22487-080200	PIN, H 8X 20			4	4				
5	1	26106-080162	BOLT, M8X 16 PLATED			1	1				

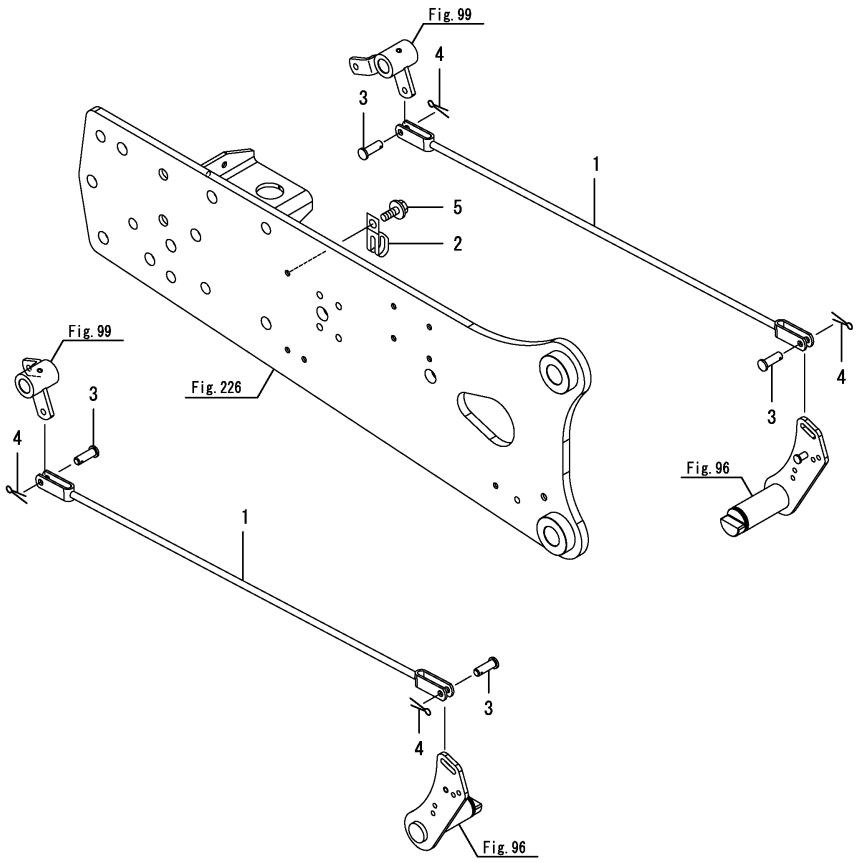

Remarks
* Applied to the following models.
EG330A(Rops specification), EG330K, EG330KW, EG334A(Rops specification), EG334KW, EG334KWA

N:Old $\frac{\text{Yes}}{\text{No}}$ New, Q:Old $\frac{\text{No}}{\text{Yes}}$ New, R:Old $\frac{\text{Yes}}{\text{Yes}}$ New, S:Old $\frac{\text{No}}{\text{No}}$ New, W:Add, Z:Discontinued, F:Interchangeable by set, K:Q'ty Change

Copyright (C) 2014 YANMAR CO., LTD. All RightsReserved.

Fig.101. HYDRAULIC PUMP

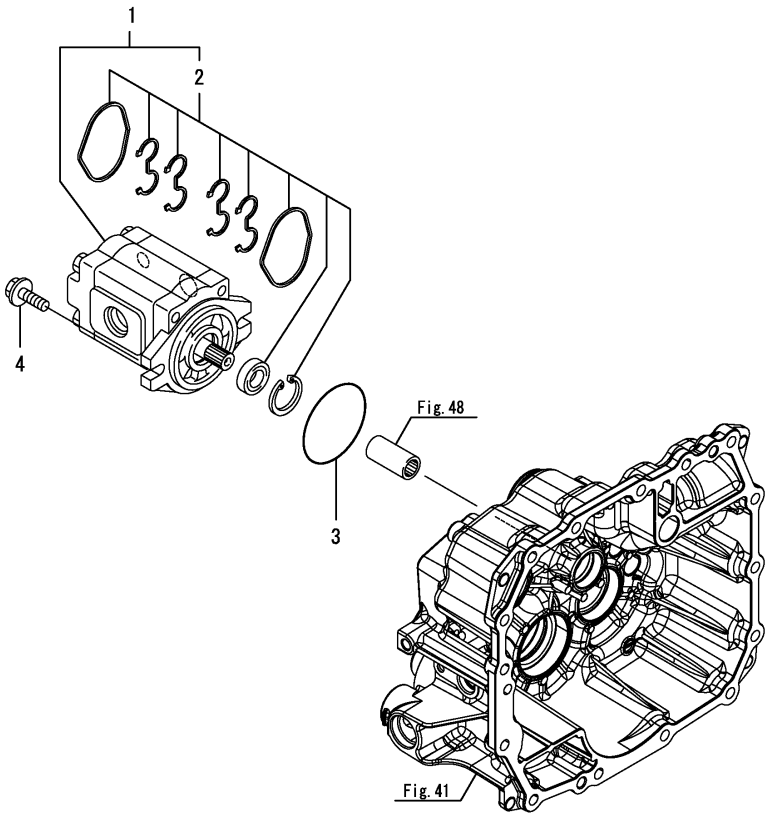

(A)=EG326Y (D)=EG334Y
(B)=EG328Y (E)=
(C)=EG330Y (F)=

No.	Lev.	Parts No.	Description	Q'ty (A)	(B)	(C)	(D)	(E)	(F)	I	R
1	1	1A7180-41100	PUMP, GEAR	1	1	1	1				
2	2	1A7180-41300	SEAL KIT	1	1	1	1				
3	1	24321-000800	O-RING, 1AG80.0	1	1	1	1				
4	1	26106-100302	BOLT, M10X 30 PLATED	2	2	2	2				

N:Old $\overset{\text{Yes}}{\underset{\text{No}}{\rightleftarrows}}$ New, Q:Old $\overset{\text{No}}{\underset{\text{Yes}}{\rightleftarrows}}$ New, R:Old $\overset{\text{Yes}}{\underset{\text{Yes}}{\rightleftarrows}}$ New, S:Old $\overset{\text{No}}{\underset{\text{No}}{\rightleftarrows}}$ New, W:Add, Z:Discontinued, F:Interchangeable by set, K:Q'ty Change

Copyright (C) 2014 YANMAR CO., LTD. All RightsReserved.

Fig.102. HYDRAULIC CYLINDER CASE

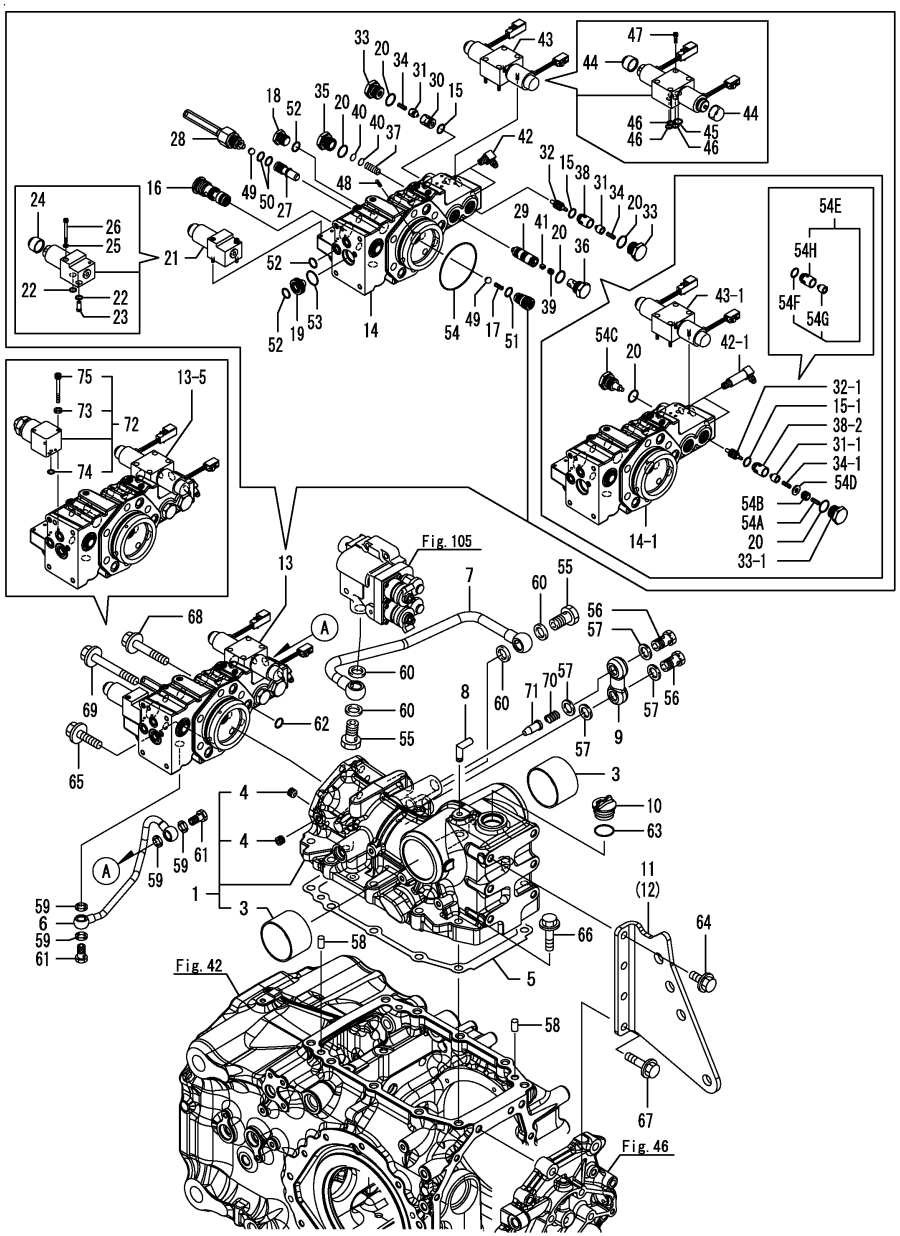

(A)=EG326Y (D)=EG334Y
(B)=EG328Y (E)=
(C)=EG330Y (F)=

No.	Lev.	Parts No.	Description	Q'ty (A)	(B)	(C)	(D)	(E)	(F)	I	R
1	1	1A7180-42101	HOUSING ASSY	1	1	1	1				
1-1	1	1A7180-42102	HOUSING ASSY,	1	1	1	1			N	
	(A=F100008)	(B=F200001)	(C=F300001) (D=F400004)								
3	2	194640-42140	BUSH, 65X70X45	2	2	2	2				
4	2	23871-010000	PLUG, R01	2	2	2	2				
5	1	1A7180-42150	GASKET, HOUSING	1	1	1	1				
6	1	1A7180-42230	PIPE, DRAIN	1	1	1	1				
7	1	1A7180-42250	PIPE ASSY, DRAIN	1	1	1	1				
8	1	1A7180-42280	PIPE, BREATHER	1	1	1	1				
8-1	1	1A7180-42281	PIPE, BREATHER	1	1	1	1			N	
	(A=F090142)	(B=F080138)	(C=F070231) (D=F060223)								
9	1	1A7180-42300	JOINT, BYPASS	1	1	1	1				
10	1	194850-42500	CAP, OIL M33	1	1	1	1				
10-1	1	1A7870-24910	CAP, OIL	1	1	1	1			R	
	(A=F100121)	(B=F200107)	(C=F300421) (D=F400459)								
11	1	1A7180-42850	HINGE, TOP LINK L	1	1	1	1				
11-1	1	1A7180-42851	HINGE, L TOP LINK	1	1	1	1			N	
	(A=F100008)	(B=F200001)	(C=F300001) (D=F400022)								
12	1	1A7180-42860	HINGE, TOP LINK R	1	1	1	1				
12-1	1	1A7180-42861	HINGE, R TOP LINK	1	1	1	1			N	
	(A=F100008)	(B=F200001)	(C=F300001) (D=F400022)								
13	1	1A7180-43200	HEAD ASSY, CYLINDER	1	1	1	1				
13-3	1	1A7180-43900	HEAD ASSY, CYLINDER	1	1	1	1			N	
	(A=F090524)	(B=F080428)	(C=F071156) (D=F061075)								
13-4	1	1A7185-43200	HEAD ASSY, CYLINDER	1	1	1	1			N	
	(A=F090574)	(B=F080466)	(C=F071217) (D=F061127)								
13-5	1	1A7185-43201	HEAD ASSY, CYLINDER	1	1	1	1			S	
	(A=F100008)	(B=F200001)	(C=F300001) (D=F400004)								
14	2	1A7180-43100	HEAD ASSY, CYLINDER	1	1	1	1				
14-1	2	1A7185-43100	HEAD ASSY, CYLINDER	1	1	1	1			S	
	(A=F090574)	(B=F080466)	(C=F071217) (D=F061127)								
15	2	194310-43240	O-RING	2	2	2	2				
15-1	2	194310-43240	O-RING	1	1	1	1			K	
	(A=F090574)	(B=F080466)	(C=F071217) (D=F061127)								
15-2	2	194310-43240	O-RING	1	1	1	1			Z	
	(A=F100008)	(B=F200001)	(C=F300001) (D=F400004)								
16	2	1A7180-43300	VALVE KIT, CHEAK	1	1	1	1				
17	2	1A7180-43340	SPRING, CHECK	1	1	1	1				
18	2	1A7180-43610	PLUG, G3/8	1	1	1	1				
19	2	1A7180-43710	STRAINER	1	1	1	1				
20	2	1A7180-43930	PACKING, JASO2017	4	4	4	4				
21	2	1A7180-45150	VALVE, SOLENOID	1	1	1	1			Z	
	(A=F100008)	(B=F200001)	(C=F300001) (D=F400004)								
22	3	1A7180-45170	PACKING, 1BS8	2	2	2	2			Z	
	(A=F100008)	(B=F200001)	(C=F300001) (D=F400004)								
23	3	1A7180-45180	STRAINER	1	1	1	1			Z	
	(A=F100008)	(B=F200001)	(C=F300001) (D=F400004)								
24	3	1A7180-45190	CAP	1	1	1	1			Z	
	(A=F100008)	(B=F200001)	(C=F300001) (D=F400004)								
25	3	22217-040000	WASHER, SPRING 4	2	2	2	2			Z	
	(A=F100008)	(B=F200001)	(C=F300001) (D=F400004)								

N:Old $\xleftarrow[\text{No}]{\text{Yes}}$ New, Q:Old $\xleftarrow[\text{Yes}]{\text{No}}$ New, R:Old $\xleftarrow[\text{Yes}]{\text{Yes}}$ New, S:Old $\xleftarrow[\text{No}]{\text{No}}$ New, W:Add, Z:Discontinued, F:Interchangeable by set, K:Q'ty Change

Remarks
* Applied to the following models.
EG326, EG328, EG330, EG334, EG334KWA

++ CONTINUE ++

Copyright (C) 2014 YANMAR CO., LTD. All RightsReserved.

Fig.102. HYDRAULIC CYLINDER CASE

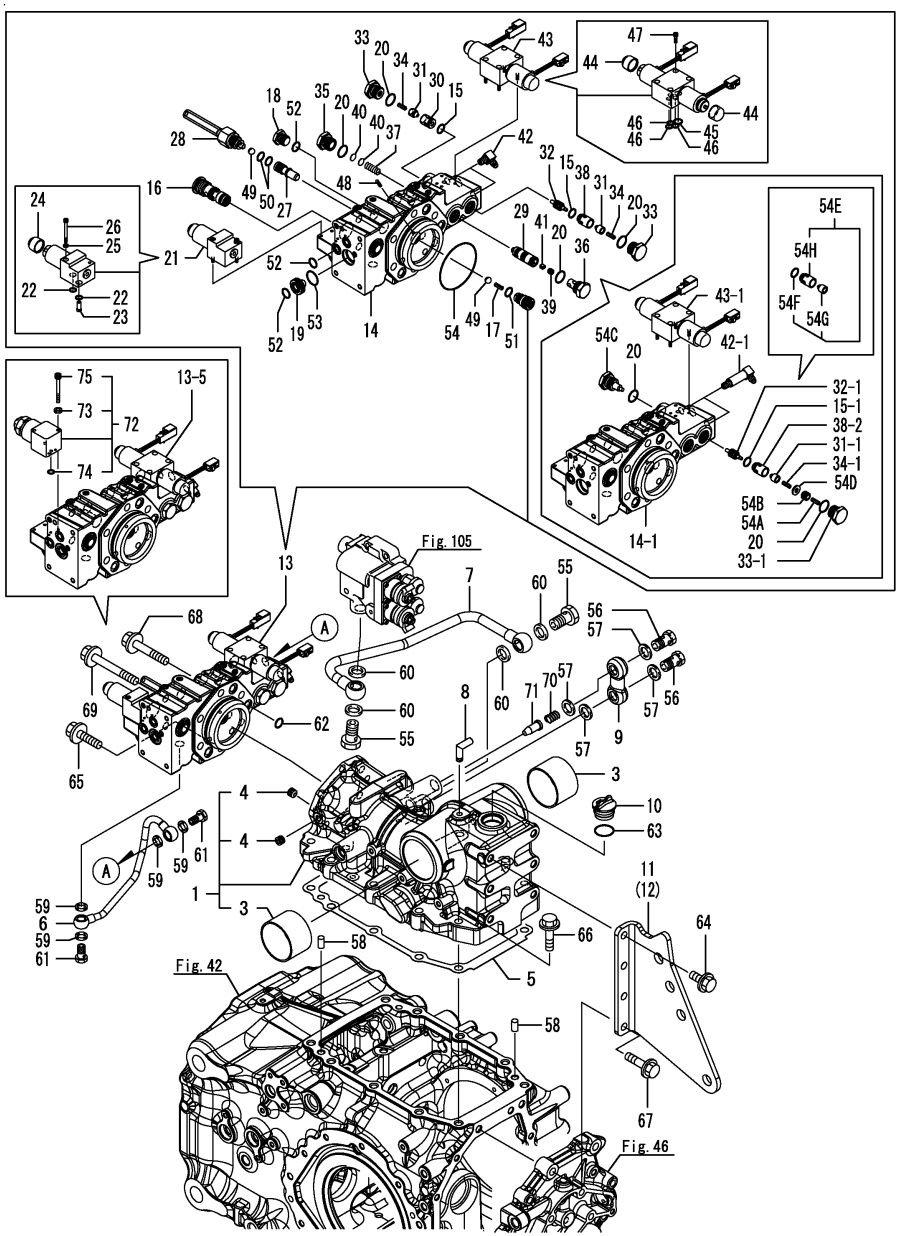

(A)=EG326Y (D)=EG334Y
(B)=EG328Y (E)=
(C)=EG330Y (F)=

No.	Lev.	Parts No.	Description	Q'ty (A)	(B)	(C)	(D)	(E)	(F)	I	R
26	3	26450-040402	BOLT, M4X 40	2	2	2	2			Z	
	(A=F100008)	(B=F200001)	(C=F300001) (D=F400004)								
27	2	1A7180-46610	VALVE, STOP	1	1	1	1				
28	2	1A7180-46701	BOLT KIT, STOP	1	1	1	1				
29	2	1A7180-77210	SPOOL, CONTROL	1	1	1	1				
30	2	1A7180-77220	SEAT	1	1	1	1				
30-2	2	1A7180-77221	SEAT	1	1	1	1			Z	
	(A=F090574)	(B=F080466)	(C=F071217) (D=F061127)								
31	2	1A7180-77230	PLUNGER, CHECK	2	2	2	2				
31-1	2	1A7185-77610	PLUNGER, CHECK	1	1	1	1			S	
	(A=F090574)	(B=F080466)	(C=F071217) (D=F061127)								
31-2	2	1A7185-77610	PLUNGER, CHECK	1	1	1	1			Z	
	(A=F100008)	(B=F200001)	(C=F300001) (D=F400004)								
32	2	1A7180-77240	PISTON, PILOT	1	1	1	1				
32-1	2	1A7185-77680	PISTON, PILOT	1	1	1	1			S	
	(A=F090574)	(B=F080466)	(C=F071217) (D=F061127)								
33	2	1A7180-77260	PLUG	2	2	2	2				
33-1	2	1A7185-77660	PLUG, CHECK	1	1	1	1			S	
	(A=F090574)	(B=F080466)	(C=F071217) (D=F061127)								
34	2	1A7180-77270	SPRING	2	2	2	2				
34-1	2	1A7180-77270	SPRING	1	1	1	1			K	
	(A=F090574)	(B=F080466)	(C=F071217) (D=F061127)								
35	2	1A7180-77280	PLUG	1	1	1	1				
36	2	1A7180-77290	PLUG, PRIORITY	1	1	1	1				
37	2	1A7180-77300	SPRING	1	1	1	1				
38	2	1A7180-77310	SEAT, A	1	1	1	1				
38-2	2	1A7185-77620	SEAT, A	1	1	1	1			S	
	(A=F090574)	(B=F080466)	(C=F071217) (D=F061127)								
38-3	2	1A7185-77620	SEAT, A	1	1	1	1			Z	
	(A=F100008)	(B=F200001)	(C=F300001) (D=F400004)								
39	2	1A7180-77320	PLUG, M8X1.25	1	1	1	1				
40	2	1A7180-77330	SHIM,	2	2	2	2				
41	2	1A7180-77350	PLUG	1	1	1	1				
42	2	1A7180-77420	ADAPTER, 1/8	2	2	2	2				
42-1	2	1A7185-77420	ELBOW, 1/8-1/4	2	2	2	2			S	
	(A=F090574)	(B=F080466)	(C=F071217) (D=F061127)								
43	2	1A7180-77430	VALVE, INCLINE	1	1	1	1				
43-1	2	1A7185-77430	VALVE ASSY, INCLINE	1	1	1	1			S	
	(A=F090574)	(B=F080466)	(C=F071217) (D=F061127)								
44	3	1A7180-45190	CAP	2	2	2	2			Z	
	(A=F090574)	(B=F080466)	(C=F071217) (D=F061127)								
45	3	24311-000080	O-RING, 1AP8.0	1	1	1	1			Z	
	(A=F090574)	(B=F080466)	(C=F071217) (D=F061127)								
46	3	24315-000050	O-RING, 1BP5.0	3	3	3	3			Z	
	(A=F090574)	(B=F080466)	(C=F071217) (D=F061127)								
47	3	26450-040122	BOLT, M4X 12	4	4	4	4			Z	
	(A=F090574)	(B=F080466)	(C=F071217) (D=F061127)								
48	2	22351-040016	PIN, SPRING 4.0X16	1	1	1	1				
49	2	24190-130003	BALL, STEEL 13/32	2	2	2	2				
50	2	24311-000110	O-RING, 1AP11.0	2	2	2	2				
51	2	24315-000120	O-RING, 1BP12.0	1	1	1	1				

N:Old $\xleftarrow[\text{No}]{\text{Yes}}$ New, Q:Old $\xleftarrow[\text{Yes}]{\text{No}}$ New, R:Old $\xleftarrow[\text{Yes}]{\text{Yes}}$ New, S:Old $\xleftarrow[\text{No}]{\text{No}}$ New, W:Add, Z:Discontinued, F:Interchangeable by set, K:Q'ty Change

Remarks
* Applied to the following models.
EG326, EG328, EG330, EG334, EG334KWA

++ CONTINUE ++

Copyright (C) 2014 YANMAR CO., LTD. All RightsReserved.

Fig.102. HYDRAULIC CYLINDER CASE

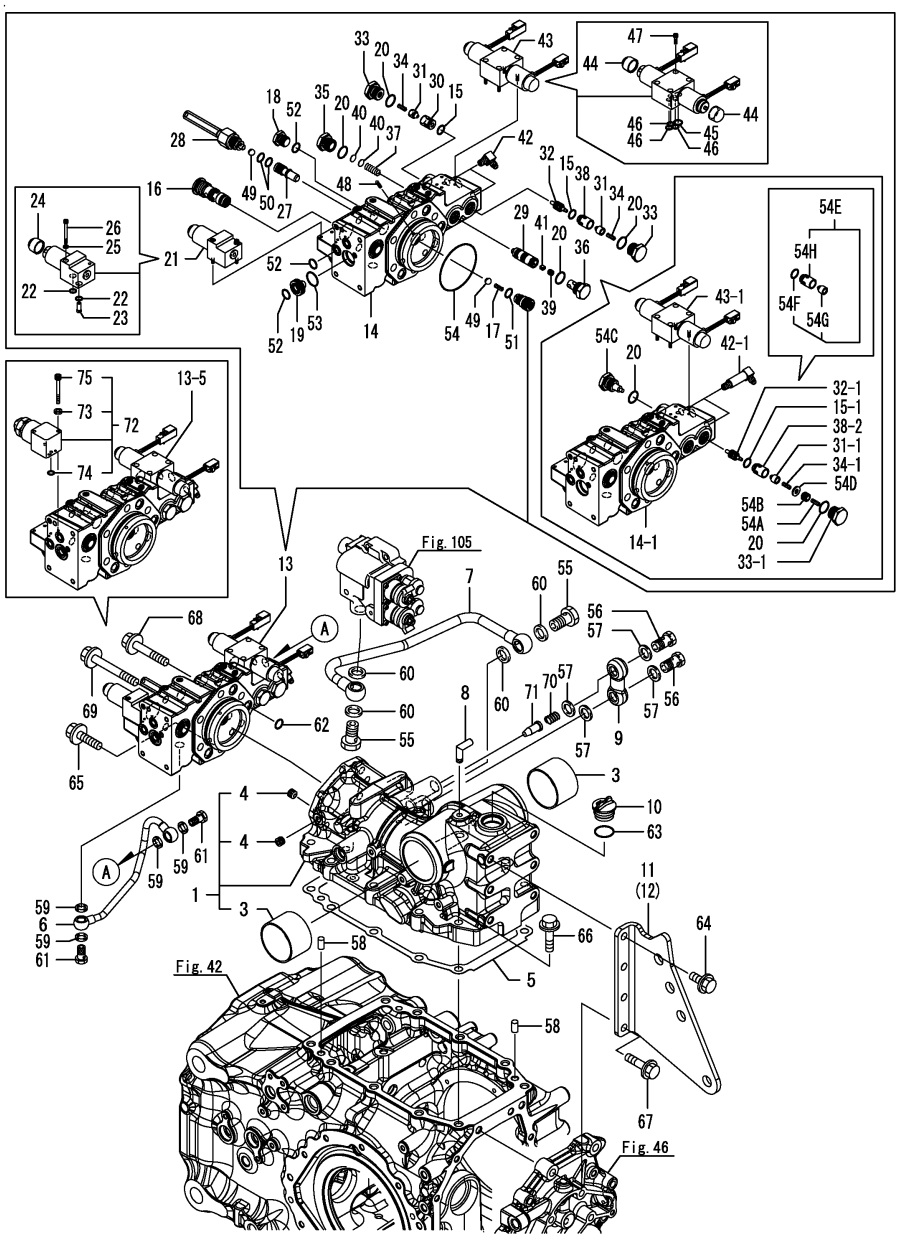

(A)=EG326Y (D)=EG334Y
(B)=EG328Y (E)=
(C)=EG330Y (F)=

No.	Lev.	Parts No.	Description	Q'ty (A)	(B)	(C)	(D)	(E)	(F)	I	R
52	2	24315-000140	O-RING, 1BP14.0	4	4	4	4				
53	2	24315-000200	O-RING, 1BP20.0	1	1	1	1				
54	2	24325-000800	O-RING, 1BG80.0	1	1	1	1				
54A	2	1A7185-77440	SPRING	1	1	1	1			W	
	(A=F090574)	(B=F080466)	(C=F071217) (D=F061127)								
54B	2	1A7185-77630	POPPET, ORIFICE	1	1	1	1			W	
	(A=F090574)	(B=F080466)	(C=F071217) (D=F061127)								
54C	2	1A7185-77640	PLUG,	1	1	1	1			W	
	(A=F090574)	(B=F080466)	(C=F071217) (D=F061127)								
54D	2	1A7185-77650	COLLAR,	1	1	1	1			W	
	(A=F090574)	(B=F080466)	(C=F071217) (D=F061127)								
54E	2	1A7185-43970	PLUNGER ASSY, CHECK	1	1	1	1			W	
	(A=F100008)	(B=F200001)	(C=F300001) (D=F400004)								
54F	3	194310-43240	O-RING	1	1	1	1			W	
	(A=F100008)	(B=F200001)	(C=F300001) (D=F400004)								
54G	3	1A7185-77610	PLUNGER, CHECK	1	1	1	1			W	
	(A=F100008)	(B=F200001)	(C=F300001) (D=F400004)								
54H	3	1A7185-77620	SEAT, A	1	1	1	1			W	
	(A=F100008)	(B=F200001)	(C=F300001) (D=F400004)								
55	1	194130-48650	BOLT, JOINT M12	2	2	2	2				
56	1	198121-48870	JOINT, PF3/8	2	2	2	2				
57	1	194555-77910	GASKET, 17	4	4	4	4				
58	1	22312-100180	PIN, PARALLEL M10X18	2	2	2	2				
59	1	23414-140018	GASKET, 14X1.0	4	4	4	4				
60	1	23414-180023	GASKET, 18X1.0	4	4	4	4				
61	1	23857-080000	BOLT, JOINT 8	2	2	2	2				
62	1	24315-000140	O-RING, 1BP14.0	3	3	3	3				
63	1	24351-020300	O-RING 1A 2030	1	1	1	1				
63-1	1	24351-240300	O-RING, 1A24030	1	1	1	1			R	
	(A=F100121)	(B=F200107)	(C=F300421) (D=F400459)								
64	1	26106-120252	BOLT, M12X 25 PLATED	6	6	6	6				
65	1	26106-120452	BOLT, M12X 45 PLATED	2	2	2	2				
66	1	26106-120502	BOLT, M12X 50 PLATED	10	10	10	10				
67	1	26106-120502	BOLT, M12X 50 PLATED	2	2	2	2				
68	1	26106-120702	BOLT, M12X 70 PLATED	2	2	2	2				
69	1	26106-120952	BOLT, M12X 95 PLATED	2	2	2	2				
70	1	1A7180-42320	SPRING, FILTER	1	1	1	1			W	
	(A=F100008)	(B=F200001)	(C=F300001) (D=F400004)								
71	1	198361-48770	STRAINER	1	1	1	1			W	
	(A=F100008)	(B=F200001)	(C=F300001) (D=F400004)								
72	1	198448-45150	VALVE ASSY, SOLENOID	1	1	1	1			W	
	(A=F100008)	(B=F200001)	(C=F300001) (D=F400004)								
73	2	22217-040000	WASHER, SPRING 4	2	2	2	2			W	
	(A=F100008)	(B=F200001)	(C=F300001) (D=F400004)								
74	2	24341-000080	O-RING, 1AS8.0	2	2	2	2			W	
	(A=F100008)	(B=F200001)	(C=F300001) (D=F400004)								
75	2	26450-040402	BOLT, M4X 40	2	2	2	2			W	
	(A=F100008)	(B=F200001)	(C=F300001) (D=F400004)								

Remarks
* Applied to the following models.
EG326, EG328, EG330, EG334, EG334KWA

N:Old $\frac{\text{Yes}}{\text{No}}$ New, Q:Old $\frac{\text{No}}{\text{Yes}}$ New, R:Old $\frac{\text{Yes}}{\text{Yes}}$ New, S:Old $\frac{\text{No}}{\text{No}}$ New, W:Add, Z:Discontinued, F:Interchangeable by set, K:Q'ty Change

Copyright (C) 2014 YANMAR CO., LTD. All RightsReserved.

Fig.238. HYDRAULIC CYLINDER CASE (A,K,KW)

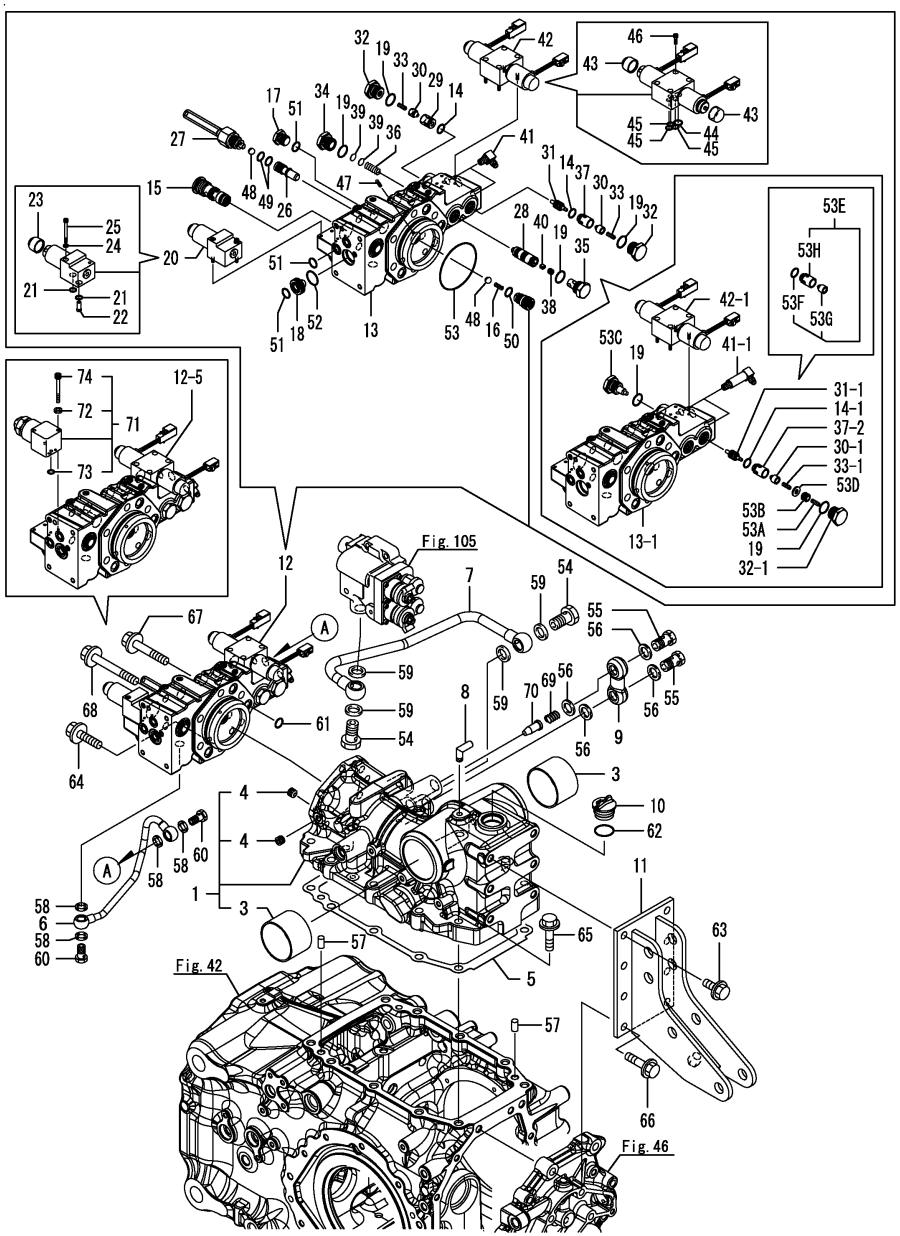

(A)=EG326Y
(B)=EG328Y
(C)=EG330Y
(D)=EG334Y
(E)=
(F)=

No.	Lev.	Parts No.	Description	Q'ty (A)	(B)	(C)	(D)	(E)	(F)	I	R
1	1	1A7180-42101	HOUSING ASSY			1	1				
1-1	1	1A7180-42102	HOUSING ASSY, (C=F300001) (D=F400004)			1	1			N	
3	2	194640-42140	BUSH, 65X70X45			2	2				
4	2	23871-010000	PLUG, R01			2	2				
5	1	1A7180-42150	GASKET, HOUSING			1	1				
6	1	1A7180-42230	PIPE, DRAIN			1	1				
7	1	1A7180-42250	PIPE ASSY, DRAIN			1	1				
8	1	1A7180-42281	PIPE, BREATHER			1	1				
9	1	1A7180-42300	JOINT, BYPASS			1	1				
10	1	194850-42500	CAP, OIL M33			1	1				
10-1	1	1A7870-24910	CAP, OIL (C=F300421) (D=F400459)			1	1			R	
11	1	1A7160-42810	HINGE ASSY, TOPLINK			1	1				
12	1	1A7180-43200	HEAD ASSY, CYLINDER			1	1				
12-3	1	1A7180-43900	HEAD ASSY, CYLINDER (C=F071156) (D=F061075)			1	1			N	
12-4	1	1A7185-43200	HEAD ASSY, CYLINDER (C=F071217) (D=F061127)			1	1			N	
12-5	1	1A7185-43201	HEAD ASSY, CYLINDER (C=F300001) (D=F400004)			1	1			S	
13	2	1A7180-43100	HEAD ASSY, CYLINDER			1	1				
13-1	2	1A7185-43100	HEAD ASSY, CYLINDER (C=F071217) (D=F061127)			1	1			S	
14	2	194310-43240	O-RING			2	2				
14-1	2	194310-43240	O-RING (C=F071217) (D=F061127)			1	1			K	
14-2	2	194310-43240	O-RING (C=F300001) (D=F400004)			1	1			Z	
15	2	1A7180-43300	VALVE KIT, CHEAK			1	1				
16	2	1A7180-43340	SPRING, CHECK			1	1				
17	2	1A7180-43610	PLUG, G3/8			1	1				
18	2	1A7180-43710	STRAINER			1	1				
19	2	1A7180-43930	PACKING, JASO2017			4	4				
20	2	1A7180-45150	VALVE, SOLENOID (C=F300001) (D=F400004)			1	1			Z	
21	3	1A7180-45170	PACKING, 1BS8 (C=F300001) (D=F400004)			2	2			Z	
22	3	1A7180-45180	STRAINER (C=F300001) (D=F400004)			1	1			Z	
23	3	1A7180-45190	CAP (C=F300001) (D=F400004)			1	1			Z	
24	3	22217-040000	WASHER, SPRING 4 (C=F300001) (D=F400004)			2	2			Z	
25	3	26450-040402	BOLT, M4X 40 (C=F300001) (D=F400004)			2	2			Z	
26	2	1A7180-46610	VALVE, STOP			1	1				
27	2	1A7180-46701	BOLT KIT, STOP			1	1				
28	2	1A7180-77210	SPOOL, CONTROL			1	1				
29	2	1A7180-77220	SEAT			1	1				
29-2	2	1A7180-77221	SEAT			1	1			Z	

N:Old $\xleftarrow[\text{No}]{\text{Yes}}$ New, Q:Old $\xleftarrow[\text{Yes}]{\text{No}}$ New, R:Old $\xleftarrow[\text{Yes}]{\text{Yes}}$ New, S:Old $\xleftarrow[\text{No}]{\text{No}}$ New, W:Add, Z:Discontinued, F:Interchangeable by set, K:Q'ty Change

Remarks
* Applied to the following models.
EG330A, EG330K, EG330KW, EG334A, EG334KW

++ CONTINUE ++

Copyright (C) 2014 YANMAR CO., LTD. All RightsReserved.

Fig.238. HYDRAULIC CYLINDER CASE (A,K,KW)

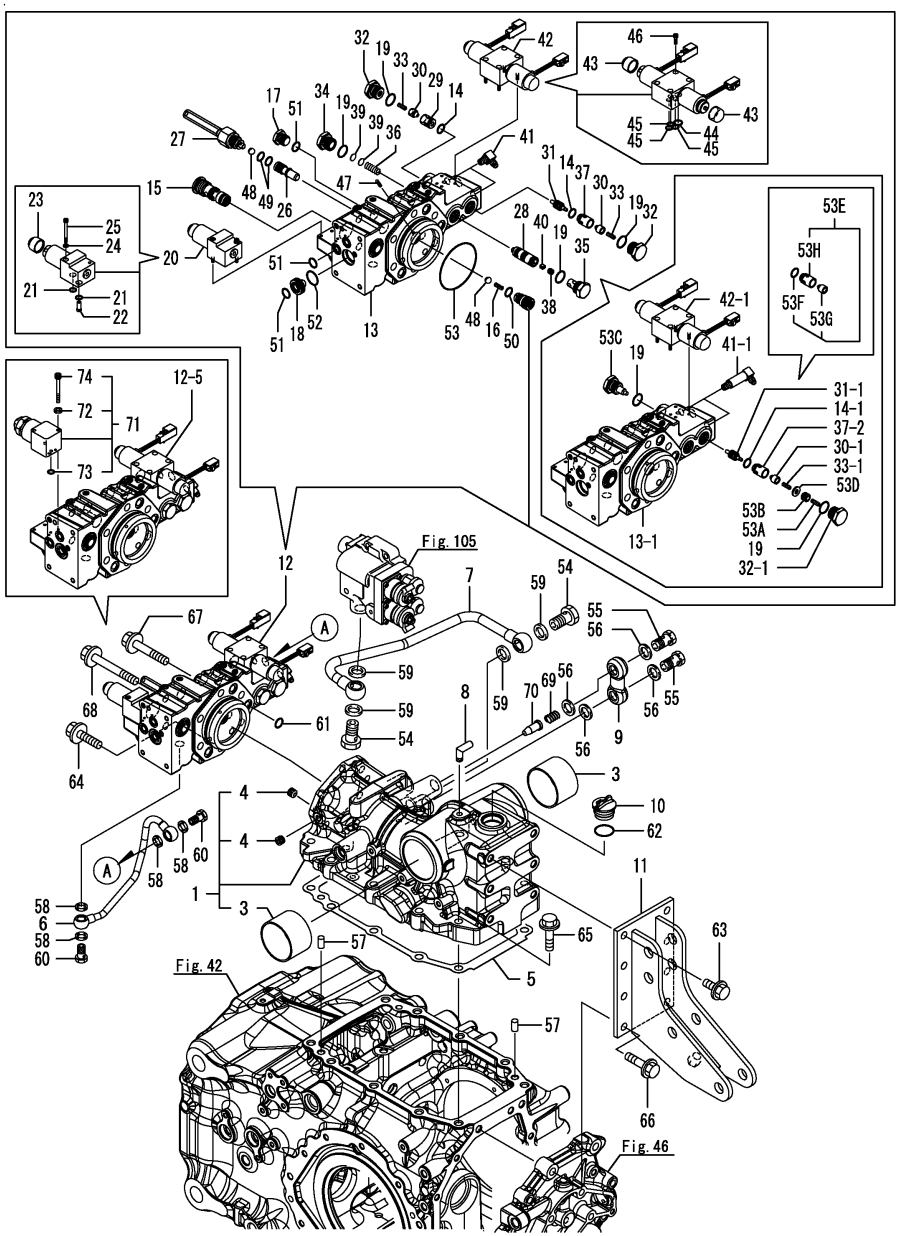

(A)=EG326Y (D)=EG334Y
(B)=EG328Y (E)=
(C)=EG330Y (F)=

No.	Lev.	Parts No.	Description	Q'ty (A)	(B)	(C)	(D)	(E)	(F)	I	R
			(C=F071217) (D=F061127)								
30	2	1A7180-77230	PLUNGER, CHECK			2	2				
30-1	2	1A7185-77610	PLUNGER, CHECK			1	1			S	
			(C=F071217) (D=F061127)								
30-2	2	1A7185-77610	PLUNGER, CHECK			1	1			Z	
			(C=F300001) (D=F400004)								
31	2	1A7180-77240	PISTON, PILOT			1	1				
31-1	2	1A7185-77680	PISTON, PILOT			1	1			S	
			(C=F071217) (D=F061127)								
32	2	1A7180-77260	PLUG			2	2				
32-1	2	1A7185-77660	PLUG, CHECK			1	1			S	
			(C=F071217) (D=F061127)								
33	2	1A7180-77270	SPRING			2	2				
33-1	2	1A7180-77270	SPRING			1	1			K	
			(C=F071217) (D=F061127)								
34	2	1A7180-77280	PLUG			1	1				
35	2	1A7180-77290	PLUG, PRIORITY			1	1				
36	2	1A7180-77300	SPRING			1	1				
37	2	1A7180-77310	SEAT, A			1	1				
37-2	2	1A7185-77620	SEAT, A			1	1			S	
			(C=F071217) (D=F061127)								
37-3	2	1A7185-77620	SEAT, A			1	1			Z	
			(C=F300001) (D=F400004)								
38	2	1A7180-77320	PLUG, M8X1.25			1	1				
39	2	1A7180-77330	SHIM,			2	2				
40	2	1A7180-77350	PLUG			1	1				
41	2	1A7180-77420	ADAPTER, 1/8			2	2				
41-1	2	1A7185-77420	ELBOW, 1/8-1/4			2	2			S	
			(C=F071217) (D=F061127)								
42	2	1A7180-77430	VALVE, INCLINE			1	1				
42-1	2	1A7185-77430	VALVE ASSY, INCLINE			1	1			S	
			(C=F071217) (D=F061127)								
43	3	1A7180-45190	CAP			2	2			Z	
			(C=F071217) (D=F061127)								
44	3	24311-000080	O-RING, 1AP8.0			1	1			Z	
			(C=F071217) (D=F061127)								
45	3	24315-000050	O-RING, 1BP5.0			3	3			Z	
			(C=F071217) (D=F061127)								
46	3	26450-040122	BOLT, M4X 12			4	4			Z	
			(C=F071217) (D=F061127)								
47	2	22351-040016	PIN, SPRING 4.0X16			1	1				
48	2	24190-130003	BALL, STEEL 13/32			2	2				
49	2	24311-000110	O-RING, 1AP11.0			2	2				
50	2	24315-000120	O-RING, 1BP12.0			1	1				
51	2	24315-000140	O-RING, 1BP14.0			4	4				
52	2	24315-000200	O-RING, 1BP20.0			1	1				
53	2	24325-000800	O-RING, 1BG80.0			1	1				
53A	2	1A7185-77440	SPRING			1	1			W	
			(C=F071217) (D=F061127)								
53B	2	1A7185-77630	POPPET, ORIFICE			1	1			W	
			(C=F071217) (D=F061127)								

Remarks
* Applied to the following models.
EG330A, EG330K, EG330KW, EG334A, EG334KW

N:Old $\xleftarrow[\text{No}]{\text{Yes}}$ New, Q:Old $\xleftarrow[\text{Yes}]{\text{No}}$ New, R:Old $\xleftarrow[\text{Yes}]{\text{Yes}}$ New, S:Old $\xleftarrow[\text{No}]{\text{No}}$ New, W:Add, Z:Discontinued, F:Interchangeable by set, K:Q'ty Change

++ CONTINUE ++

Copyright (C) 2014 YANMAR CO., LTD. All RightsReserved.

Fig.238. HYDRAULIC CYLINDER CASE (A,K,KW)

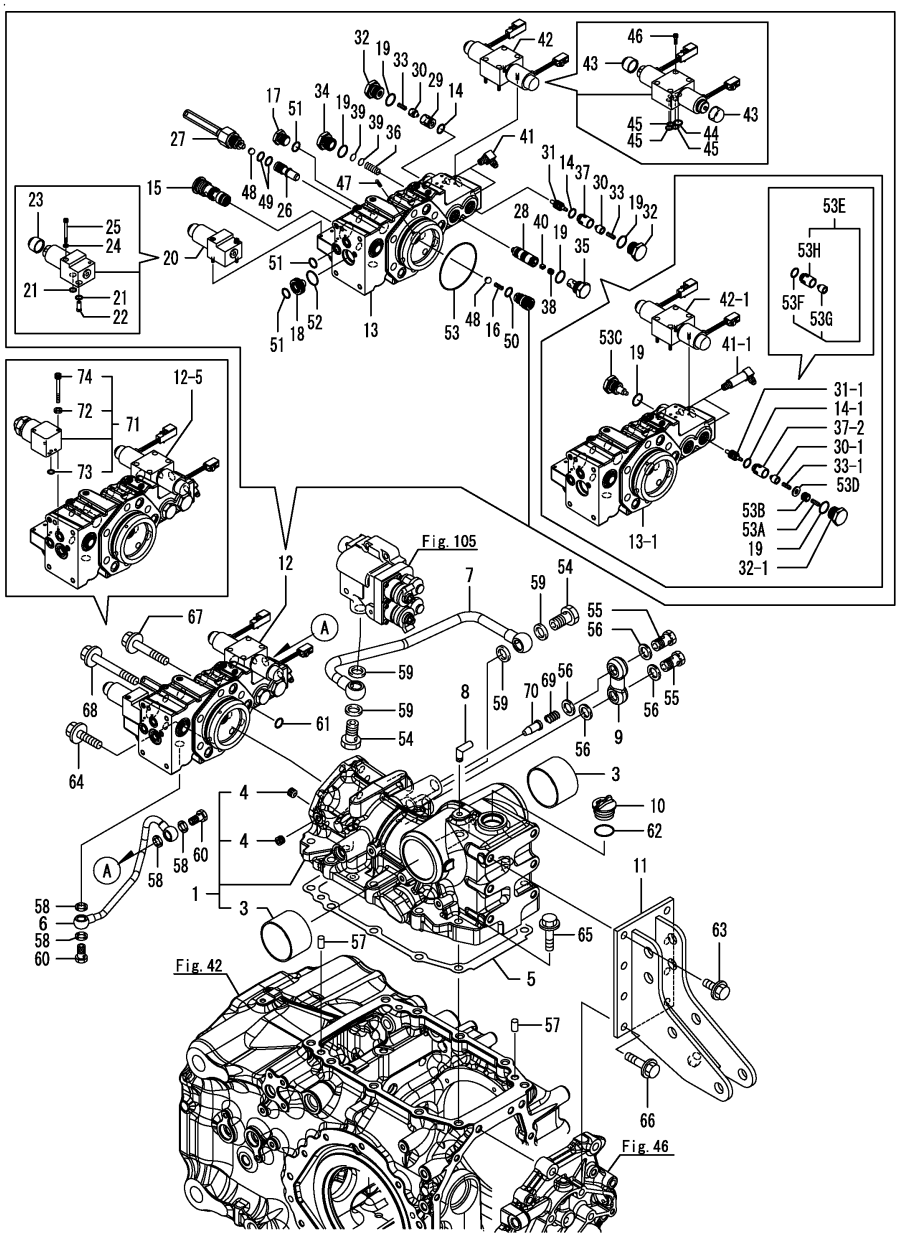

(A)=EG326Y (D)=EG334Y
(B)=EG328Y (E)=
(C)=EG330Y (F)=

No.	Lev.	Parts No.	Description	Q'ty (A)	(B)	(C)	(D)	(E)	(F)	I	R
53C	2	1A7185-77640	PLUG, (C=F071217) (D=F061127)			1	1			W	
53D	2	1A7185-77650	COLLAR, (C=F071217) (D=F061127)			1	1			W	
53E	2	1A7185-43970	PLUNGER ASSY, CHECK (C=F300001) (D=F400004)			1	1			W	
53F	3	194310-43240	O-RING (C=F300001) (D=F400004)			1	1			W	
53G	3	1A7185-77610	PLUNGER, CHECK (C=F300001) (D=F400004)			1	1			W	
53H	3	1A7185-77620	SEAT, A (C=F300001) (D=F400004)			1	1			W	
54	1	194130-48650	BOLT, JOINT M12			2	2				
55	1	198121-48870	JOINT, PF3/8			2	2				
56	1	194555-77910	GASKET, 17			4	4				
57	1	22312-100180	PIN, PARALLEL M10X18			2	2				
58	1	23414-140018	GASKET, 14X1.0			4	4				
59	1	23414-180023	GASKET, 18X1.0			4	4				
60	1	23857-080000	BOLT, JOINT 8			2	2				
61	1	24315-000140	O-RING, 1BP14.0			3	3				
62	1	24351-020300	O-RING 1A 2030			1	1				
62-1	1	24351-240300	O-RING, 1A24030 (C=F300421) (D=F400459)			1	1			R	
63	1	26106-120252	BOLT, M12X 25 PLATED			6	6				
64	1	26106-120452	BOLT, M12X 45 PLATED			2	2				
65	1	26106-120502	BOLT, M12X 50 PLATED			10	10				
66	1	26106-120502	BOLT, M12X 50 PLATED			2	2				
67	1	26106-120702	BOLT, M12X 70 PLATED			2	2				
68	1	26106-120952	BOLT, M12X 95 PLATED			2	2				
69	1	1A7180-42320	SPRING, FILTER (C=F300001) (D=F400004)			1	1			W	
70	1	198361-48770	STRAINER			1	1				
71	1	198448-45150	VALVE ASSY, SOLENOID (C=F300001) (D=F400004)			1	1			W	
72	2	22217-040000	WASHER, SPRING 4 (C=F300001) (D=F400004)			2	2			W	
73	2	24341-000080	O-RING, 1AS8.0 (C=F300001) (D=F400004)			2	2			W	
74	2	26450-040402	BOLT, M4X 40 (C=F300001) (D=F400004)			2	2			W	

Remarks
* Applied to the following models.
EG330A, EG330K, EG330KW, EG334A, EG334KW

N:Old $\frac{\text{Yes}}{\text{No}}$ New, Q:Old $\frac{\text{No}}{\text{Yes}}$ New, R:Old $\frac{\text{Yes}}{\text{Yes}}$ New, S:Old $\frac{\text{No}}{\text{No}}$ New, W:Add, Z:Discontinued, F:Interchangeable by set, K:Q'ty Change

Copyright (C) 2014 YANMAR CO., LTD. All RightsReserved.

Fig.103. PISTON

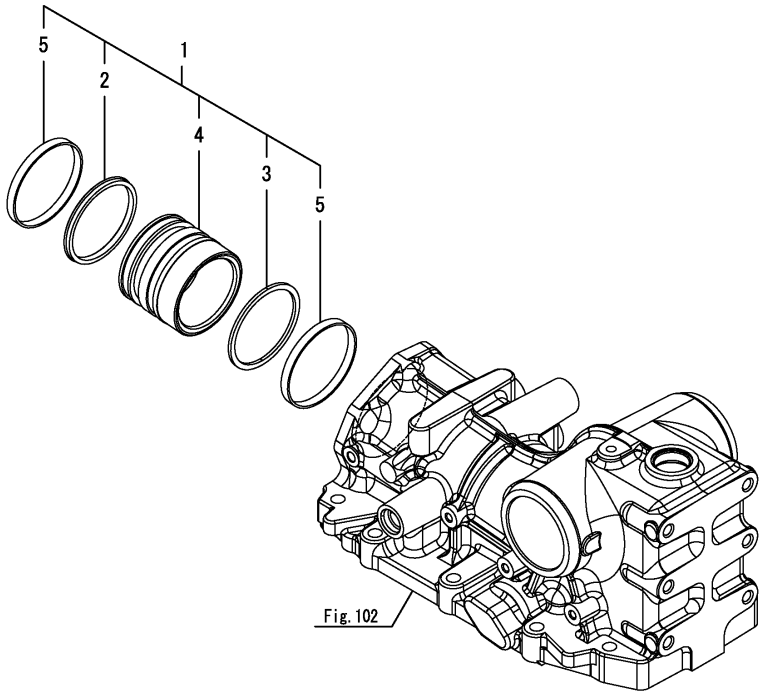

(A)=EG326Y (D)=EG334Y
(B)=EG328Y (E)=
(C)=EG330Y (F)=

No.	Lev.	Parts No.	Description	Q'ty (A)	(B)	(C)	(D)	(E)	(F)	I	R
1	1	1A7180-43280	PISTON ASSY	1	1	1	1				
2	2	198448-43260	PACKING, 85	1	1	1	1				
3	2	198448-43270	RING, BACK UP 85	1	1	1	1				
4	2	1A7180-43290	PISTON, HYDRAULIC	1	1	1	1				
5	2	198390-43360	WEARING, 85	2	2	2	2				

N:Old $\xleftrightarrow[\text{No}]{\text{Yes}}$ New, Q:Old $\xleftrightarrow[\text{Yes}]{\text{No}}$ New, R:Old $\xleftrightarrow[\text{Yes}]{\text{Yes}}$ New, S:Old $\xleftrightarrow[\text{No}]{\text{No}}$ New, W:Add, Z:Discontinued, F:Interchangeable by set, K:Q'ty Change

Copyright (C) 2014 YANMAR CO., LTD. All RightsReserved.

Fig.104. LIFT CRANK

(A)=EG326Y
(B)=EG328Y
(C)=EG330Y
(D)=EG334Y
(E)=
(F)=

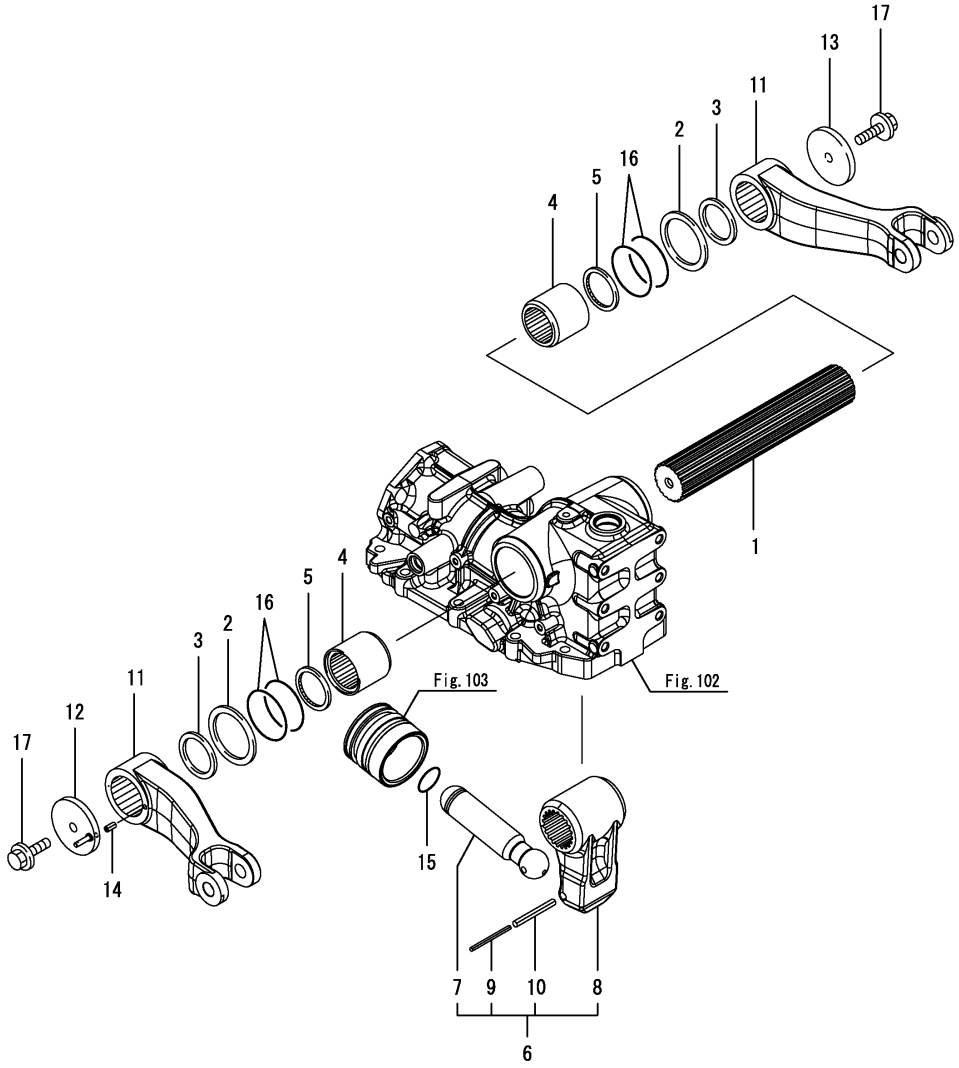

No.	Lev.	Parts No.	Description	Q'ty (A)	(B)	(C)	(D)	(E)	(F)	I	R
1	1	1A7180-44210	SHAFT, LIFTING	1	1	1	1				
2	1	1A7640-44230	WASHER, 65X82X2	2	2	2	2				
3	1	1A7640-44240	PLATE, 50X64X2	2	2	2	2				
4	1	194640-44250	SLEEVE, LIFT SHAFT	2	2	2	2				
5	1	194640-44261	SEAL, SPLINE	2	2	2	2				
6	1	1A7180-44311	CRANK ASSY, LIFT	1	1	1	1				
7	2	1A7180-43410	ROD, PISTON	1	1	1	1				
8	2	1A7180-44110	CRANK, LIFT	1	1	1	1				
9	2	22351-050070	PIN, SPRING 5.0X70	1	1	1	1				
10	2	22351-080070	PIN, SPRING 8.0X70	1	1	1	1				
11	1	1A7180-44410	ARM, LIFT	2	2	2	2				
12	1	1A7180-44510	ARM, FEEDBACK	1	1	1	1				
13	1	194640-44540-1	RETAINER, SHAFT	1	1	1	1				
14	1	22351-060012	PIN, SPRING 6.0X12	1	1	1	1				
15	1	24311-000360	O-RING, 1AP36.0	1	1	1	1				
16	1	24321-000650	O-RING, 1AG65.0	4	4	4	4				
17	1	26106-120302	BOLT, M12X 30 PLATED	2	2	2	2				

N:Old $\frac{\text{Yes}}{\text{No}}$ New, Q:Old $\frac{\text{No}}{\text{Yes}}$ New, R:Old $\frac{\text{Yes}}{\text{Yes}}$ New, S:Old $\frac{\text{No}}{\text{No}}$ New, W:Add, Z:Discontinued, F:Interchangeable by set, K:Q'ty Change

Copyright (C) 2014 YANMAR CO., LTD. All RightsReserved.

Fig.105. CONTROL VALVE

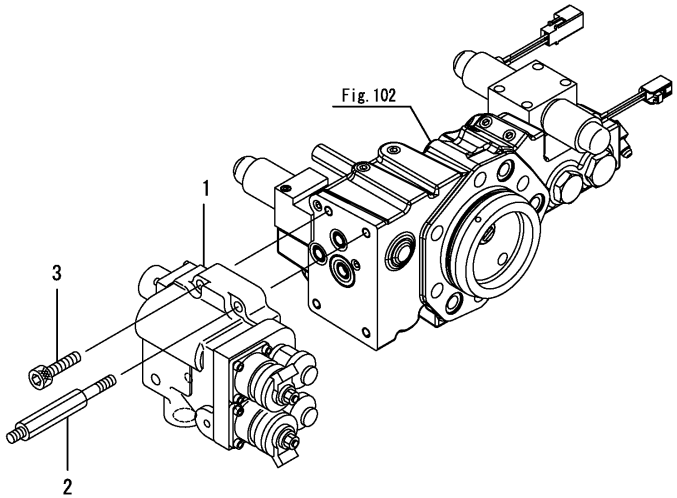

(A)=EG326Y (D)=EG334Y
(B)=EG328Y (E)=
(C)=EG330Y (F)=

No.	Lev.	Parts No.	Description	Q'ty (A)	(B)	(C)	(D)	(E)	(F)	I	R
1	1	1A7260-45100-1	VALVE ASSY, SOLENOID	1	1	1	1				
2	1	1A7180-45110	BOLT	1	1	1	1				
3	1	26450-080352	BOLT, M8X 35	3	3	3	3				

N:Old ◄Yes/No► New, Q:Old ◄No/Yes► New, R:Old ◄Yes/Yes► New, S:Old ◄No/No► New, W:Add, Z:Discontinued, F:Interchangeable by set, K:Q'ty Change

Copyright (C) 2014 YANMAR CO., LTD. All RightsReserved.

Fig.106. RELIEF VALVE

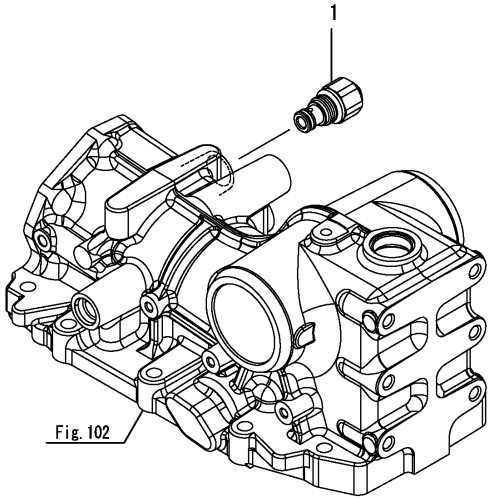

(A)=EG326Y
(B)=EG328Y
(C)=EG330Y
(D)=EG334Y
(E)=
(F)=

No.	Lev.	Parts No.	Description	Q'ty (A)	(B)	(C)	(D)	(E)	(F)	I	R
1	1	1A7180-45700	VALVE, RELIEF	1	1	1	1				

N:Old ◄Yes/No► New, Q:Old ◄No/Yes► New, R:Old ◄Yes/Yes► New, S:Old ◄No/No► New, W:Add, Z:Discontinued, F:Interchangeable by set, K:Q'ty Change

Copyright (C) 2014 YANMAR CO., LTD. All RightsReserved.

Fig.107. SAFETY VALVE

(A)=EG326Y
(B)=EG328Y
(C)=EG330Y
(D)=EG334Y
(E)=
(F)=

No.	Lev.	Parts No.	Description	Q'ty (A)	(B)	(C)	(D)	(E)	(F)	I	R
1	1	194150-45320	SPRING, RELIEF VALVE	1	1	1	1				
2	1	198220-45350	COLLAR, VALVE	1	1	1	1				
3	1	198220-45370	PLUG, SAFETY VALVE	1	1	1	1				
4	1	198220-46400	SHIM SET	1	1	1	1				
5	1	194640-46410	SEAT, SAFETY VALVE	1	1	1	1				
6	1	194640-46420	POPPET	1	1	1	1				
7	1	22351-060028	PIN, SPRING 6.0X28	1	1	1	1				
8	1	24311-000120	O-RING, 1AP12.0	1	1	1	1				
9	1	24311-000180	O-RING, 1AP18.0	1	1	1	1				

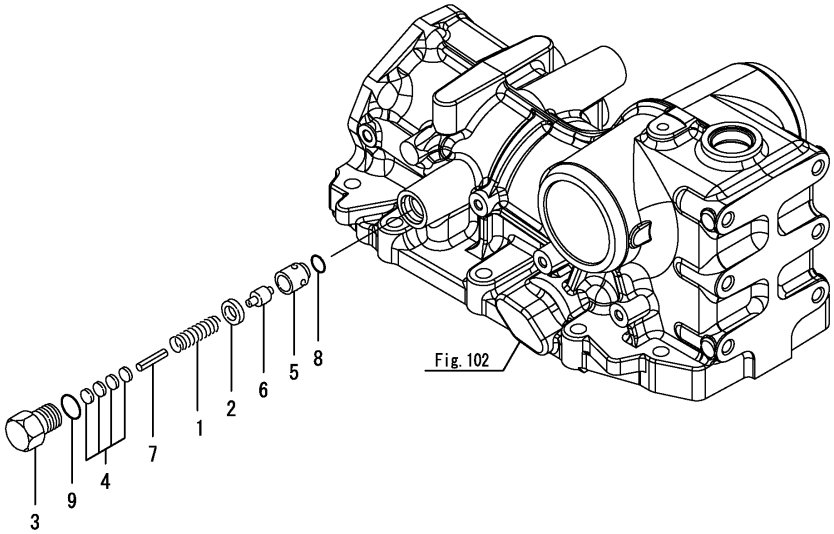

N:Old $\xleftarrow[\text{No}]{\text{Yes}}$ New, Q:Old $\xleftarrow[\text{Yes}]{\text{No}}$ New, R:Old $\xleftarrow[\text{Yes}]{\text{Yes}}$ New, S:Old $\xleftarrow[\text{No}]{\text{No}}$ New, W:Add, Z:Discontinued, F:Interchangeable by set, K:Q'ty Change

Copyright (C) 2014 YANMAR CO., LTD. All RightsReserved.

Fig.108. STOP VALVE KNOB

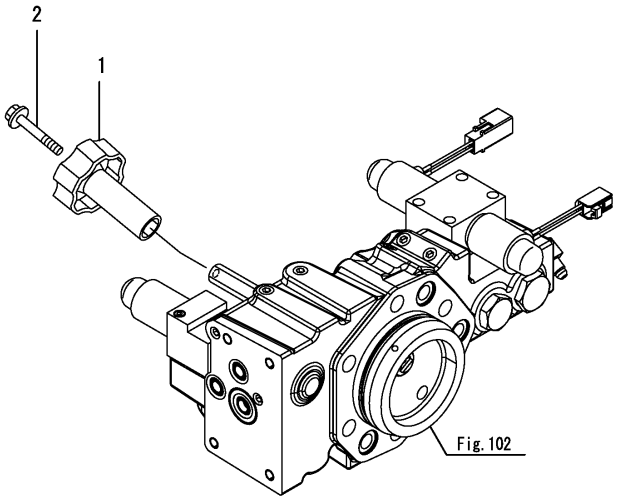

(A)=EG326Y
(B)=EG328Y
(C)=EG330Y
(D)=EG334Y
(E)=
(F)=

No.	Lev.	Parts No.	Description	Q'ty (A)	(B)	(C)	(D)	(E)	(F)	I	R
1	1	1A7260-46640	KNOB, VALVE	1	1	1	1				
2	1	1A7260-46650	BOLT, M6X40	1	1	1	1				

N:Old $\xleftarrow[\text{No}]{\text{Yes}}$ New, Q:Old $\xleftarrow[\text{Yes}]{\text{No}}$ New, R:Old $\xleftarrow[\text{Yes}]{\text{Yes}}$ New, S:Old $\xleftarrow[\text{No}]{\text{No}}$ New, W:Add, Z:Discontinued, F:Interchangeable by set, K:Q'ty Change

Copyright (C) 2014 YANMAR CO., LTD. All RightsReserved.

Fig.109. HYDRAULIC CONTROL

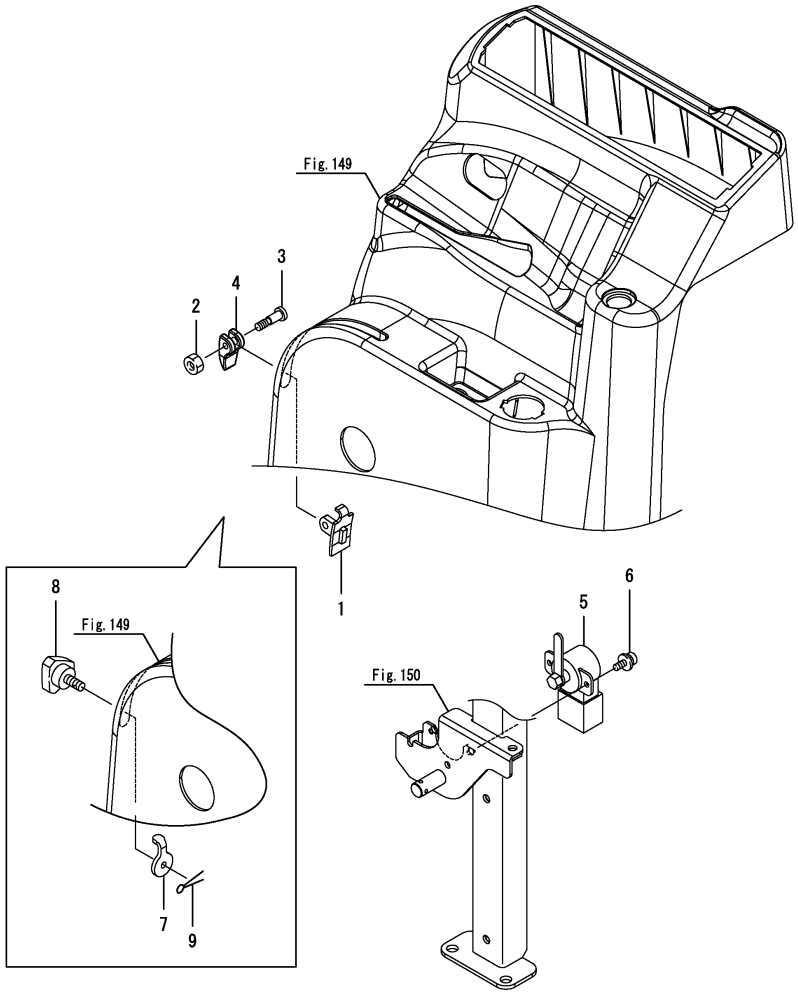

(A)=EG326Y (B)=EG328Y (C)=EG330Y (D)=EG334Y (E)= (F)=

No.	Lev.	Parts No.	Description	Q'ty (A)	(B)	(C)	(D)	(E)	(F)	I	R
1	1	198268-46552	BASE, CAM LOCK	1	1	1	1			Z	1
	(A=F090108)	(B=F080594)	(C=F070860) (D=F060435)								
2	1	198268-46580	NUT, CAM LOCK	1	1	1	1			Z	1
	(A=F090108)	(B=F080594)	(C=F070860) (D=F060435)								
3	1	198268-46600	BOLT, LOCK	1	1	1	1			Z	1
	(A=F090108)	(B=F080594)	(C=F070860) (D=F060435)								
4	1	198268-46610	LOCK, CAM	1	1	1	1			Z	1
	(A=F090108)	(B=F080594)	(C=F070860) (D=F060435)								
5	1	1A7180-52920	SENSOR, POTENTIO	1	1	1	1				
6	1	26023-040102	SCREW, M4X10	2	2	2	2				
7	1	198121-47111	STOPPER, LEVER	1	1	1	1			W	1
	(A=F090108)	(B=F080594)	(C=F070860) (D=F060435)								
8	1	194130-47851	BOLT, M6X15	1	1	1	1			W	1
	(A=F090108)	(B=F080594)	(C=F070860) (D=F060435)								
9	1	22417-200200	PIN, COTTER 2.0X20	1	1	1	1			W	1
	(A=F090108)	(B=F080594)	(C=F070860) (D=F060435)								

Remarks
* Applied to the following models.
EG326, EG328, EG330, EG334
EG330A (Cabin specification), EG334A (Cabin specification)
(1)No.1, 2, 3, 4 is interchangeable with a set of No. 7, 8, 9.

N:Old $\xleftarrow[\text{No}]{\text{Yes}}$ New, Q:Old $\xleftarrow[\text{Yes}]{\text{No}}$ New, R:Old $\xleftarrow[\text{Yes}]{\text{Yes}}$ New, S:Old $\xleftarrow[\text{No}]{\text{No}}$ New, W:Add, Z:Discontinued, F:Interchangeable by set, K:Q'ty Change

Copyright (C) 2014 YANMAR CO., LTD. All RightsReserved.

Fig.239. HYDRAULIC CONTROL(A,K,KW,KWA)

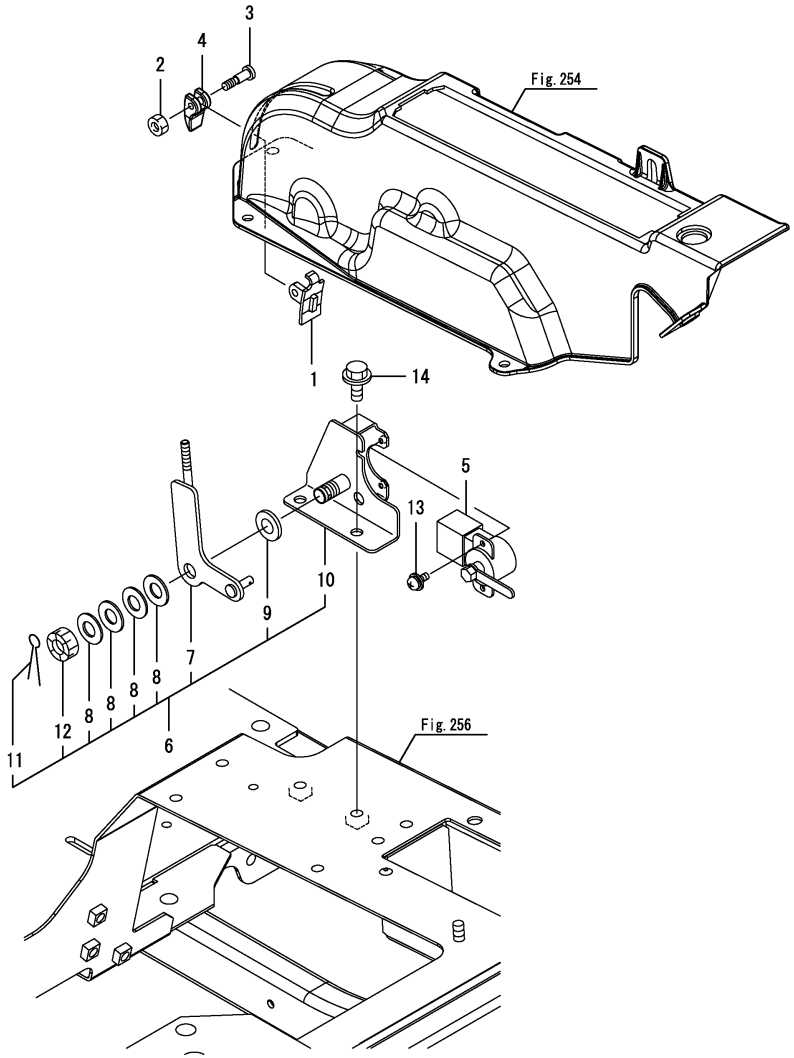

(A)=EG326Y (D)=EG334Y
(B)=EG328Y (E)=
(C)=EG330Y (F)=

No.	Lev.	Parts No.	Description	Q'ty (A)	(B)	(C)	(D)	(E)	(F)	I	R
1	1	198268-46552	BASE, CAM LOCK			1	1				
2	1	198268-46580	NUT, CAM LOCK			1	1				
3	1	198268-46600	BOLT, LOCK			1	1				
4	1	198268-46610	LOCK, CAM			1	1				
5	1	1A7180-52920	SENSOR, POTENTIO			1	1				
6	1	1A7160-63520	LEVER UNIT, POSITION			1	1				
7	2	1A7160-47310	LEVER ASSY, POSITION			1	1				
8	2	194151-47760	WASHER, 12			4	4				
9	2	194310-47790	PLATE, FRICTION			1	1				
10	2	1A7160-63340	STAY ASSY, POSITION			1	1				
11	2	22417-250250	PIN, COTTER 2.5X25			1	1				
12	2	26877-120002	NUT, CASTLE M12			1	1				
13	1	26023-040102	SCREW, M4X10			2	2				
14	1	26106-080162	BOLT, M8X 16 PLATED			2	2				

Remarks
* Applied to the following models.
EG330A(Rops specification), EG330K, EG330KW, EG334A(Rops specification), EG334KW, EG334KWA

N:Old $\frac{\text{Yes}}{\text{No}}$ New, Q:Old $\frac{\text{No}}{\text{Yes}}$ New, R:Old $\frac{\text{Yes}}{\text{Yes}}$ New, S:Old $\frac{\text{No}}{\text{No}}$ New, W:Add, Z:Discontinued, F:Interchangeable by set, K:Q'ty Change

Copyright (C) 2014 YANMAR CO., LTD. All RightsReserved.

Fig.110. HYDRAULIC CONTROL LEVER KNOB

(A)=EG326Y
(B)=EG328Y
(C)=EG330Y
(D)=EG334Y
(E)=
(F)=

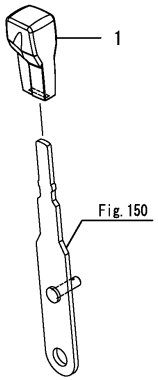

No.	Lev.	Parts No.	Description	Q'ty (A)	(B)	(C)	(D)	(E)	(F)	I	R
1	1	194940-47341	KNOB, LEVER	1	1	1	1				

Remarks
* Applied to the following models.
EG326, EG328, EG330, EG334
EG330A(Cabin specification), EG334A(Cabin specification)

N:Old $\xleftrightarrow[\text{No}]{\text{Yes}}$ New, Q:Old $\xleftrightarrow[\text{Yes}]{\text{No}}$ New, R:Old $\xleftrightarrow[\text{Yes}]{\text{Yes}}$ New, S:Old $\xleftrightarrow[\text{No}]{\text{No}}$ New, W:Add, Z:Discontinued, F:Interchangeable by set, K:Q'ty Change

Copyright (C) 2014 YANMAR CO., LTD. All RightsReserved.

Fig.240. HYDRAULIC CONTROL LEVER KNOB(A,K,KW,KWA)

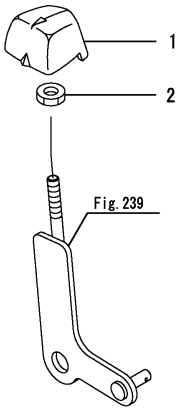

Remarks
* Applied to the following models.
EG330A(Rops specification), EG330K, EG330KW, EG334A(Rops specification), EG334KW, EG334KWA

(A)=EG326Y (D)=EG334Y
(B)=EG328Y (E)=
(C)=EG330Y (F)=

No.	Lev.	Parts No.	Description	Q'ty (A)	(B)	(C)	(D)	(E)	(F)	I	R
1	1	198268-47451	KNOB, CONTROL			1	1				
2	1	26756-060002	NUT, LOCK M6			1	1				

N:Old ←Yes/No→ New, Q:Old ←No/Yes→ New, R:Old ←Yes/Yes→ New, S:Old ←No/No→ New, W:Add, Z:Discontinued, F:Interchangeable by set, K:Q'ty Change

Copyright (C) 2014 YANMAR CO., LTD. All RightsReserved.

Fig.111. HYDRAULIC PIPING(1)

(A)=EG326Y (D)=EG334Y
(B)=EG328Y (E)=
(C)=EG330Y (F)=

No.	Lev.	Parts No.	Description	Q'ty (A)	(B)	(C)	(D)	(E)	(F)	I	R
1	1	1A7180-17710	HOSE, PRESSURE G3/8	2	2	2	2				
2	1	1A7180-48110	HOSE, PRESSURE	1	1	1	1				
3	1	1A7180-48191	FILTER, LINE 10	1	1	1	1				
4	2	1A7180-48210	CARTRIDGE ASSY	1	1	1	1				
5	1	172142-76181	JOINT ASSY	4	4	4	4				
6	2	24315-000140	O-RING, 1BP14.0	4	4	4	4				
7	1	26106-080252	BOLT, M8X 25 PLATED	4	4	4	4				
7-1	1	26106-080252	BOLT, M8X 25 PLATED	2	2	2	2			K	
	(A=F090556)	(B=F080470)	(C=F071221) (D=F061132)								

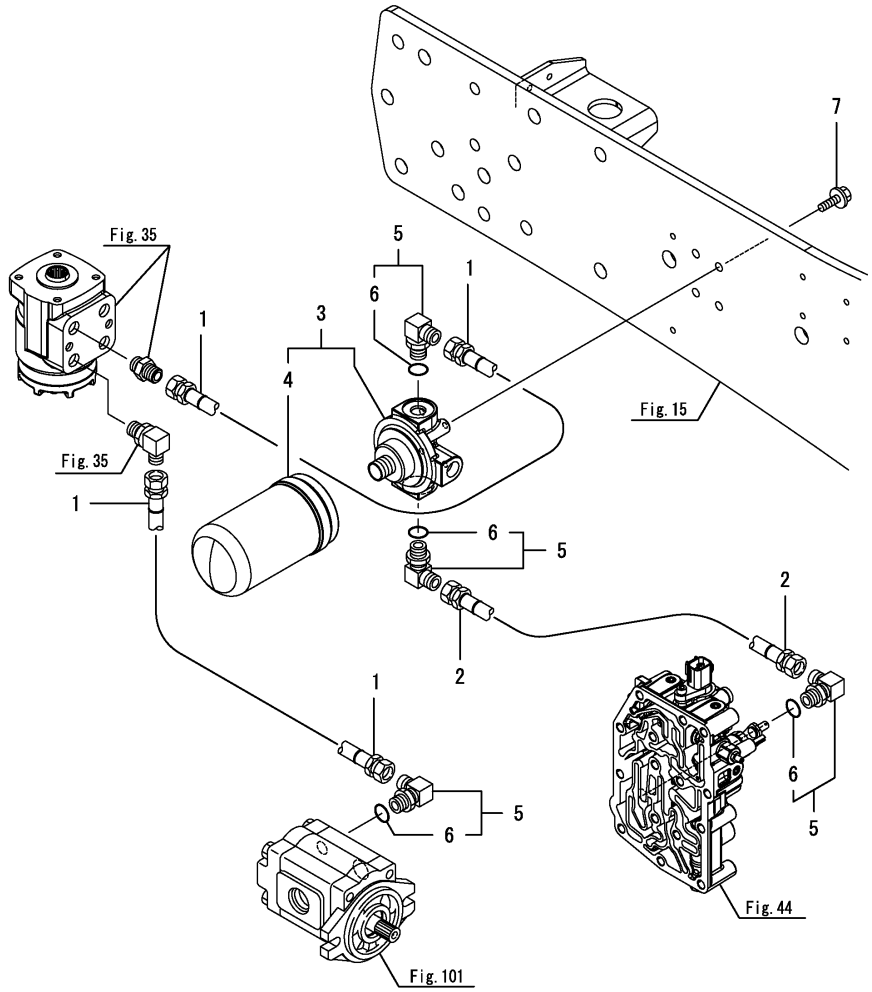

N:Old $\frac{\text{Yes}}{\text{No}}$ New, Q:Old $\frac{\text{No}}{\text{Yes}}$ New, R:Old $\frac{\text{Yes}}{\text{Yes}}$ New, S:Old $\frac{\text{No}}{\text{No}}$ New, W:Add, Z:Discontinued, F:Interchangeable by set, K:Q'ty Change

Copyright (C) 2014 YANMAR CO., LTD. All RightsReserved.

Fig.112. HYDRAULIC PIPING(1)(CABIN)

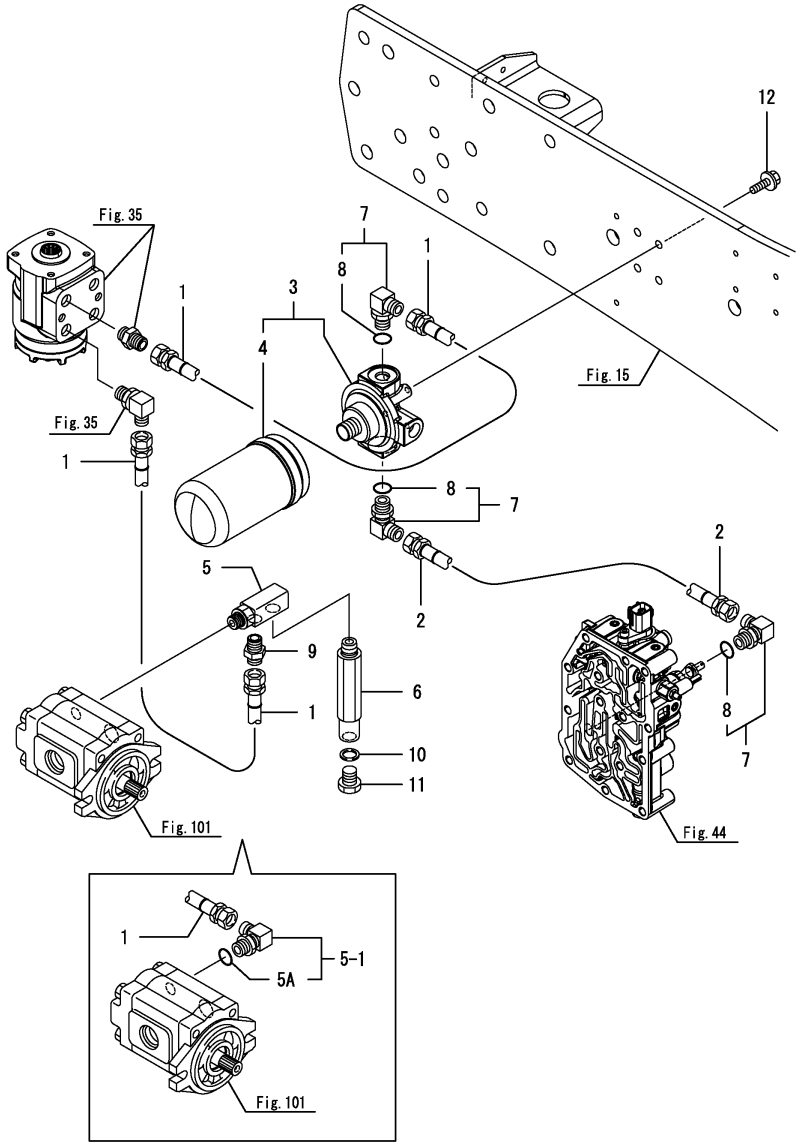

(A)=EG326Y (D)=EG334Y
(B)=EG328Y (E)=
(C)=EG330Y (F)=

No.	Lev.	Parts No.	Description	Q'ty (A)	(B)	(C)	(D)	(E)	(F)	I	R
1	1	1A7180-17710	HOSE, PRESSURE G3/8	2	2	2	2				
2	1	1A7180-48110	HOSE, PRESSURE	1	1	1	1				
3	1	1A7180-48191	FILTER, LINE 10	1	1	1	1				
4	2	1A7180-48210	CARTRIDGE ASSY	1	1	1	1				
5	1	1A7180-48500	CONNECTOR ASSY, 3/8	1	1	1	1				
5-1	1	172142-76181	JOINT ASSY	1	1	1	1			S	
	(A=F100008)	(B=F200001)	(C=F300001) (D=F400004)								
5A	2	24315-000140	O-RING, 1BP14.0	1	1	1	1			W	
	(A=F100008)	(B=F200001)	(C=F300001) (D=F400004)								
6	1	1A7180-48550	BRANCH	1	1	1	1			Z	
	(A=F100008)	(B=F200001)	(C=F300001) (D=F400004)								
7	1	172142-76181	JOINT ASSY	3	3	3	3				
8	2	24315-000140	O-RING, 1BP14.0	3	3	3	3				
9	1	23391-030000	JOINT, RGI-3/8	1	1	1	1			Z	
	(A=F100008)	(B=F200001)	(C=F300001) (D=F400004)								
10	1	23414-160000	GASKET, 16X1.0	1	1	1	1			Z	
	(A=F100008)	(B=F200001)	(C=F300001) (D=F400004)								
11	1	23887-160002	PLUG, 16	1	1	1	1			Z	
	(A=F100008)	(B=F200001)	(C=F300001) (D=F400004)								
12	1	26106-080252	BOLT, M8X 25 PLATED	4	4	4	4				
12-1	1	26106-080252	BOLT, M8X 25 PLATED	2	2	2	2			K	
	(A=F090556)	(B=F080470)	(C=F071221) (D=F061132)								

Remarks
* Applied to the following models.
EG326, EG328, EG330, EG330A, EG334, EG334A

N:Old $\overset{\text{Yes}}{\underset{\text{No}}{\leftrightarrow}}$ New, Q:Old $\overset{\text{No}}{\underset{\text{Yes}}{\leftrightarrow}}$ New, R:Old $\overset{\text{Yes}}{\underset{\text{Yes}}{\leftrightarrow}}$ New, S:Old $\overset{\text{No}}{\underset{\text{No}}{\leftrightarrow}}$ New, W:Add, Z:Discontinued, F:Interchangeable by set, K:Q'ty Change

Copyright (C) 2014 YANMAR CO., LTD. All RightsReserved.

Fig.241. HYDRAULIC PIPING(1) (A,K,KW,KWA)

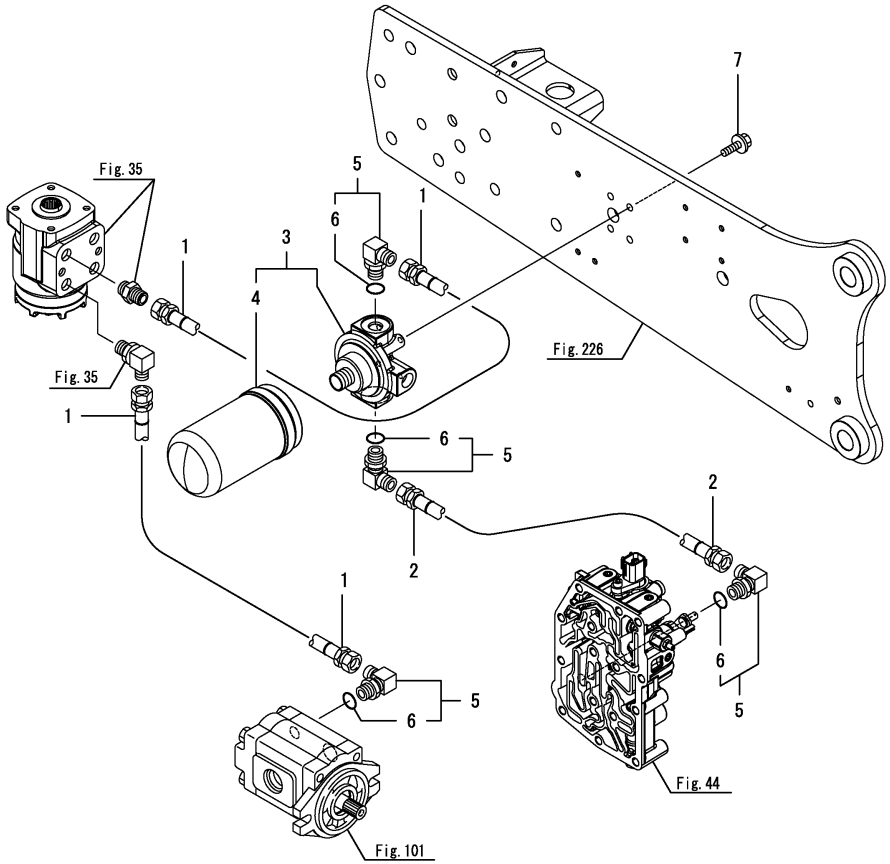

(A)=EG326Y (D)=EG334Y
(B)=EG328Y (E)=
(C)=EG330Y (F)=

No.	Lev.	Parts No.	Description	Q'ty (A)	(B)	(C)	(D)	(E)	(F)	I	R
1	1	1A7160-17710	HOSE, G3/8			2	2				
2	1	1A7160-48110	HOSE, G3/8			1	1				
3	1	1A7180-48191	FILTER, LINE 10			1	1				
4	2	1A7180-48210	CARTRIDGE ASSY			1	1				
5	1	172142-76181	JOINT ASSY			4	4				
6	2	24315-000140	O-RING, 1BP14.0			4	4				
7	1	26106-080252	BOLT, M8X 25 PLATED			4	4				
7-1	1	26106-080252	BOLT, M8X 25 PLATED (C=F071221) (D=F061132)			2	2			K	

Remarks
* Applied to the following models.
EG330A(Rops specification), EG330K, EG330KW, EG334A(Rops specification), EG334KW, EG334KWA

N:Old ◄Yes/No► New, Q:Old ◄No/Yes► New, R:Old ◄Yes/Yes► New, S:Old ◄No/No► New, W:Add, Z:Discontinued, F:Interchangeable by set, K:Q'ty Change

Copyright (C) 2014 YANMAR CO., LTD. All RightsReserved.

Fig.113. HYDRAULIC PIPING(2)

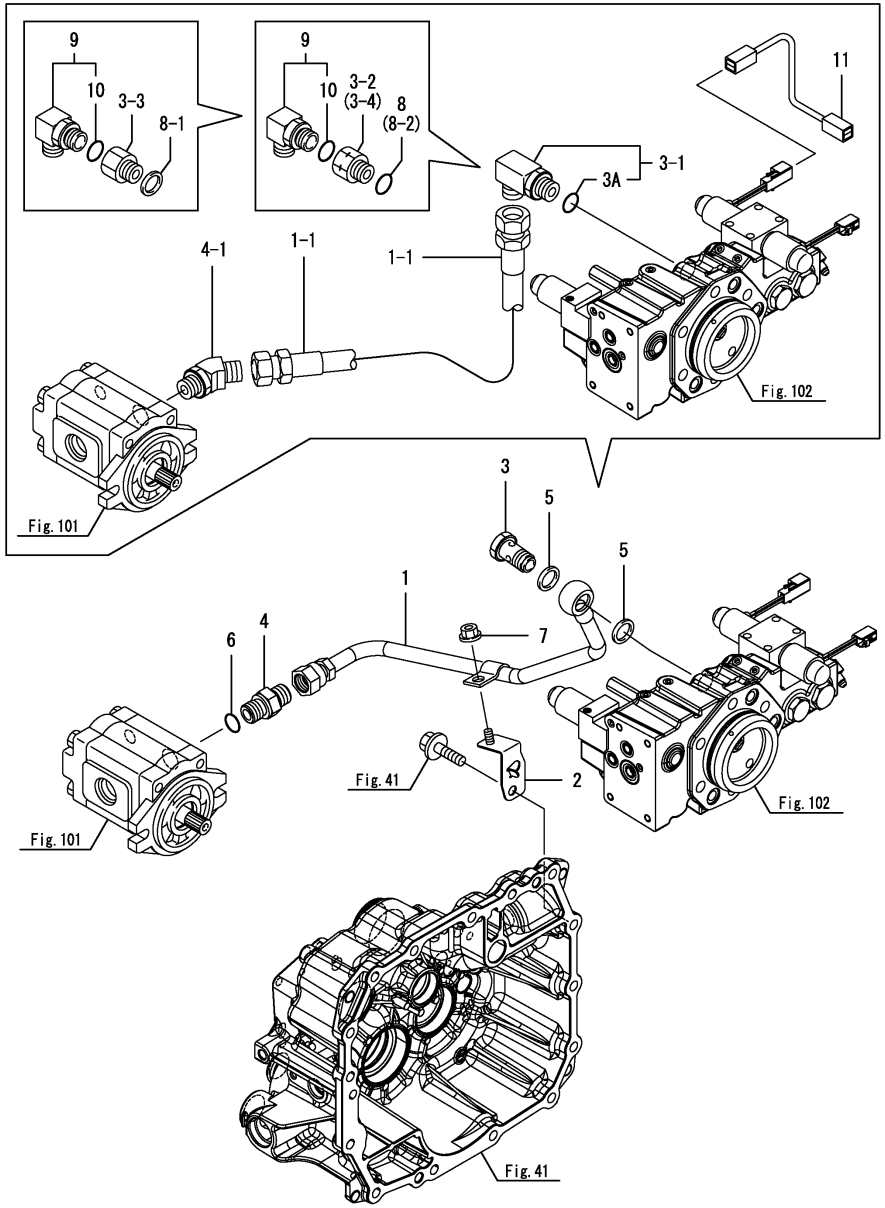

(A)=EG326Y (D)=EG334Y
(B)=EG328Y (E)=
(C)=EG330Y (F)=

No.	Lev.	Parts No.	Description	Q'ty (A)	(B)	(C)	(D)	(E)	(F)	I	R
1	1	1A7180-48131	PIPE ASSY,PRESSURE R	1	1	1	1				
1-1	1	1A7180-48310	HOSE, G1/2	1	1	1	1			S	
	(A=F100008)	(B=F200001)	(C=F300001) (D=F400004)								
2	1	1A7180-48170	HOLDER, PIPE	1	1	1	1			Z	
	(A=F100008)	(B=F200001)	(C=F300001) (D=F400004)								
3	1	198361-48750	BOLT ASSY, JOINT	1	1	1	1				
3-1	1	1A7180-48360	ELBOW, G1/2-M20	1	1	1	1			S	
	(A=F100008)	(B=F200001)	(C=F300001) (D=F400004)								
3-2	1	1A7140-48390	BOLT, M20-G1/2	1	1	1	1			F	1
	(A=F100008)	(B=F200001)	(C=F300001) (D=F400004)								
3-3	1	1A7180-48390	BOLT, M20-G1/2	1	1	1	1			S	
	(A=F090524)	(B=F080428)	(C=F071156) (D=F061075)								
3-4	1	1A7140-48390	BOLT, M20-G1/2	1	1	1	1			S	
	(A=F090574)	(B=F080466)	(C=F071217) (D=F061127)								
3A	2	1D2310-68550	O-RING, AS568-115	1	1	1	1			W	
	(A=F100008)	(B=F200001)	(C=F300001) (D=F400004)								
3A-1	2	1D2310-68550	O-RING, AS568-115	1	1	1	1			Z	
	(A=F100008)	(B=F200001)	(C=F300001) (D=F400004)								
4	1	172112-77361	CONNECTOR	1	1	1	1				
4-1	1	1D4180-22850	ELBOW, 45 PF1/2	1	1	1	1			S	
	(A=F100008)	(B=F200001)	(C=F300001) (D=F400004)								
5	1	23414-200026	GASKET, 20X1.0	2	2	2	2			Z	
	(A=F100008)	(B=F200001)	(C=F300001) (D=F400004)								
6	1	24311-000180	O-RING, 1AP18.0	1	1	1	1			Z	
	(A=F100008)	(B=F200001)	(C=F300001) (D=F400004)								
7	1	26366-080002	NUT, M8	1	1	1	1			Z	
	(A=F100008)	(B=F200001)	(C=F300001) (D=F400004)								
8	1	1A7180-43930	PACKING, JASO2017	1	1	1	1			W	
	(A=F100008)	(B=F200001)	(C=F300001) (D=F400004)								
8-1	1	23414-200026	GASKET, 20X1.0	1	1	1	1			S	
	(A=F090524)	(B=F080428)	(C=F071156) (D=F061075)								
8-2	1	1A7180-43930	PACKING, JASO2017	1	1	1	1			S	
	(A=F090574)	(B=F080466)	(C=F071217) (D=F061127)								
9	1	172141-76900	CONNECTOR ASSY	1	1	1	1			W	
	(A=F100008)	(B=F200001)	(C=F300001) (D=F400004)								
10	2	24315-000180	O-RING, 1BP18.0	1	1	1	1			W	
	(A=F100008)	(B=F200001)	(C=F300001) (D=F400004)								
11	1	1A7180-51660	WIRE, LEAD UFO	1	1	1	1			W	
	(A=F090524)	(B=F080428)	(C=F071156) (D=F061075)								
11-1	1	1A7180-51660	WIRE, LEAD UFO	1	1	1	1			Z	
	(A=F090574)	(B=F080466)	(C=F071217) (D=F061127)								

Remarks
(1)No.3-1 is interchangeable with a set of No.3-2, 8 & 9.

N:Old $\xleftarrow[\text{No}]{\text{Yes}}$ New, Q:Old $\xleftarrow[\text{Yes}]{\text{No}}$ New, R:Old $\xleftarrow[\text{Yes}]{\text{Yes}}$ New, S:Old $\xleftarrow[\text{No}]{\text{No}}$ New, W:Add, Z:Discontinued, F:Interchangeable by set, K:Q'ty Change

Copyright (C) 2014 YANMAR CO., LTD. All RightsReserved.

Fig.114. HYDRAULIC FILTER

(A)=EG326Y (D)=EG334Y
(B)=EG328Y (E)=
(C)=EG330Y (F)=

No.	Lev.	Parts No.	Description	Q'ty (A)	(B)	(C)	(D)	(E)	(F)	I	R
1	1	198535-48080	FILTER, HYDRAULIC	1	1	1	1				
2	1	1A7180-48340	TUBE, PRESSURE	1	1	1	1				
3	1	1A7180-48350	NIPPLE, PF3/4	2	2	2	2				
3-1	1	1A7180-48351	ADAPTER, HYD PF3/4	2	2	2	2			R	
	(A=F100095)	(B=F200072)	(C=F300272) (D=F400272)								
3-2	1	1A7180-48352	ADAPTER, HYD PF3/4	2	2	2	2			N	
	(A=F100151)	(B=F200134)	(C=F300534) (D=F400596)								
4	1	1A7180-48460	GUARD, FILTER	1	1	1	1				
5	1	23000-041000	CLAMP, 41	2	2	2	2				
6	1	24311-000240	O-RING, 1AP24.0	2	2	2	2				
7	1	26106-080122	BOLT, M8X 12 PLATED	2	2	2	2				

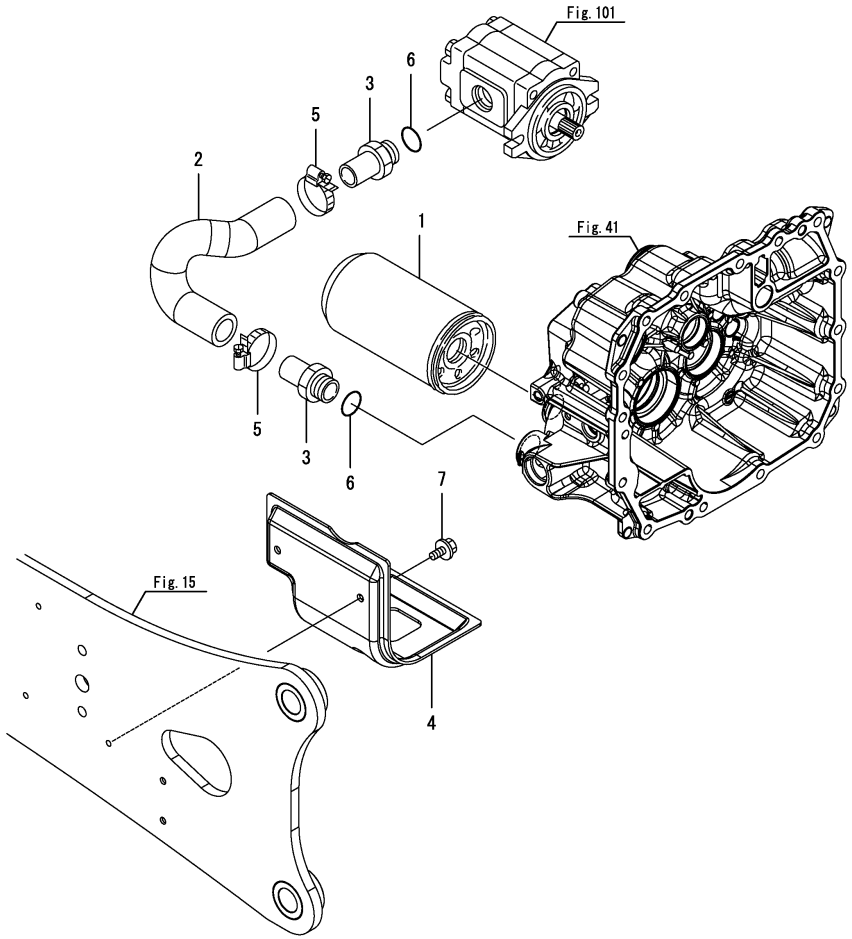

Remarks
* Applied to the following models.
EG326, EG328, EG330, EG334
EG330A(Cabin specification), EG334A(Cabin specification)

N:Old ◄Yes/No► New, Q:Old ◄No/Yes► New, R:Old ◄Yes/Yes► New, S:Old ◄No/No► New, W:Add, Z:Discontinued, F:Interchangeable by set, K:Q'ty Change

Copyright (C) 2014 YANMAR CO., LTD. All RightsReserved.

Fig.242. HYDRAULIC FILTER(A,K,KW,KWA)

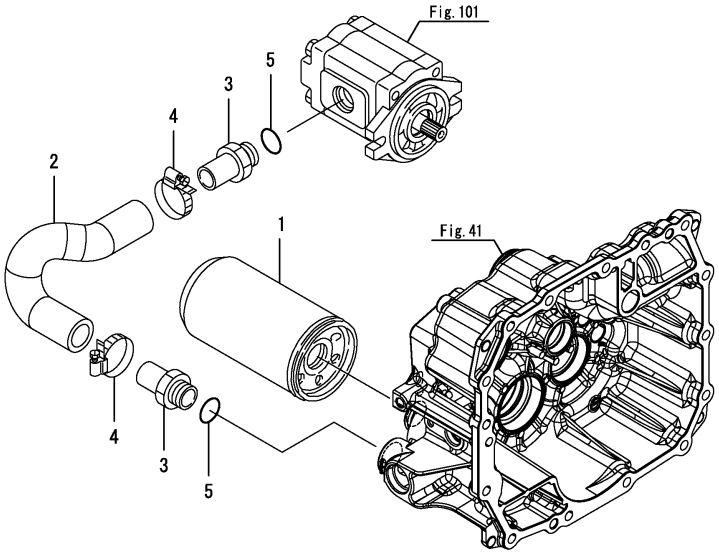

(A)=EG326Y (D)=EG334Y
(B)=EG328Y (E)=
(C)=EG330Y (F)=

No.	Lev.	Parts No.	Description	Q'ty (A)	(B)	(C)	(D)	(E)	(F)	I	R
1	1	198535-48080	FILTER, HYDRAULIC			1	1				
2	1	1A7180-48340	TUBE, PRESSURE			1	1				
3	1	1A7180-48350	NIPPLE, PF3/4			2	2				
3-1	1	1A7180-48351	ADAPTER, HYD PF3/4 (C=F300272) (D=F400272)			2	2			R	
3-2	1	1A7180-48352	ADAPTER, HYD PF3/4 (C=F300534) (D=F400596)			2	2			N	
4	1	23000-041000	CLAMP, 41			2	2				
5	1	24311-000240	O-RING, 1AP24.0			2	2				

Remarks
* Applied to the following models.
EG330A(Rops specification), EG330K, EG330KW, EG334A(Rops specification), EG334KW, EG334KWA

N:Old ◄Yes/No► New, Q:Old ◄No/Yes► New, R:Old ◄Yes/Yes► New, S:Old ◄No/No► New, W:Add, Z:Discontinued, F:Interchangeable by set, K:Q'ty Change

Copyright (C) 2014 YANMAR CO., LTD. All RightsReserved.

Fig.115. OIL COOLER

(A)=EG326Y
(B)=EG328Y
(C)=EG330Y
(D)=EG334Y
(E)=
(F)=

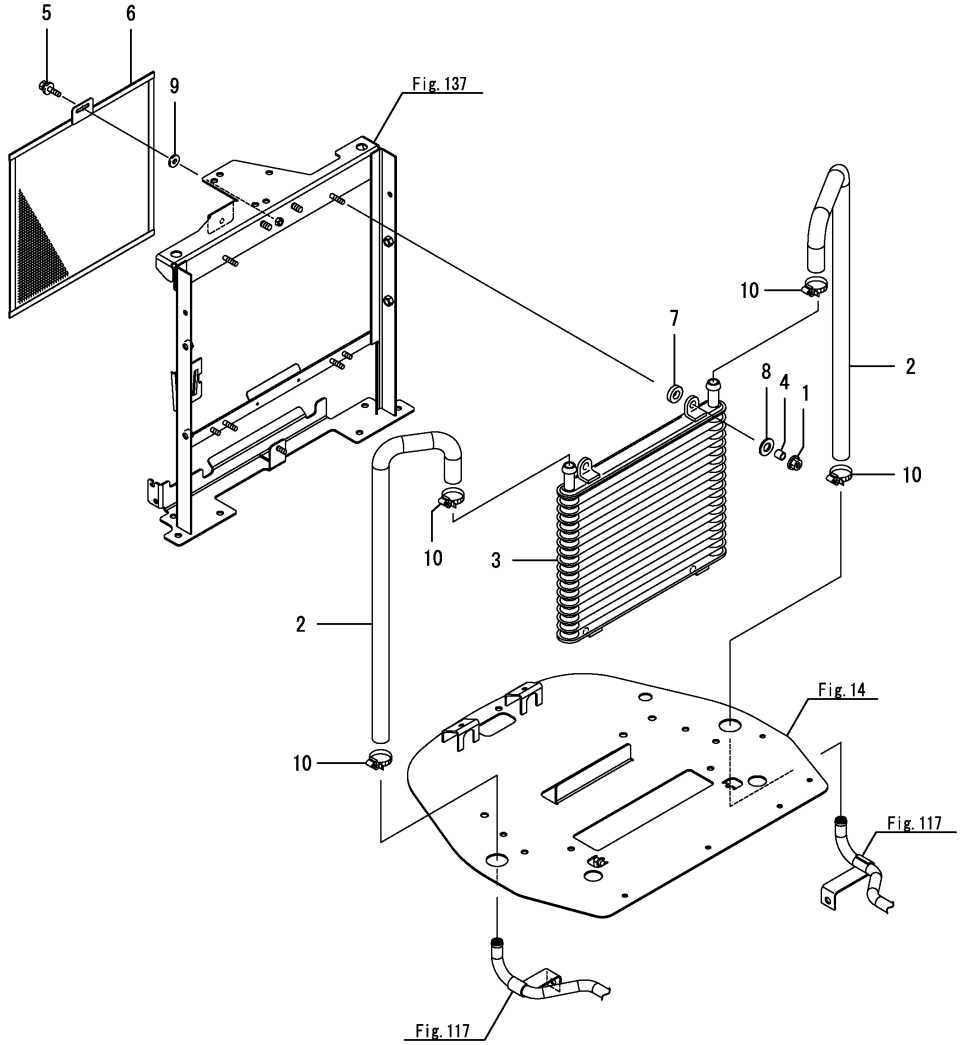

No.	Lev.	Parts No.	Description	Q'ty (A)	(B)	(C)	(D)	(E)	(F)	I	R
1	1	194990-22130	NUT, M6	4	4	4	4				
2	1	1A7180-48790	HOSE, OIL COOLER	2	2	2	2				
3	1	198138-49100	COOLER ASSY, OIL	1	1	1	1				
4	1	1A7180-49190	COLLAR, 9.0X7.0X9.0	4	4	4	4				
5	1	198072-60590	BOLT, M6X20	1	1	1	1				
6	1	1A7180-60650	SCREEN, OIL COOLER	1	1	1	1				
7	1	194420-62260	ABSORBER	4	4	4	4				
8	1	22137-100000	WASHER, 10	4	4	4	4				
9	1	22157-060000	WASHER, 6	1	1	1	1				
10	1	23000-022000	CLAMP, 22	4	4	4	4				

N:Old $\xleftrightarrow[\text{No}]{\text{Yes}}$ New, Q:Old $\xleftrightarrow[\text{Yes}]{\text{No}}$ New, R:Old $\xleftrightarrow[\text{Yes}]{\text{Yes}}$ New, S:Old $\xleftrightarrow[\text{No}]{\text{No}}$ New, W:Add, Z:Discontinued, F:Interchangeable by set, K:Q'ty Change

Copyright (C) 2014 YANMAR CO., LTD. All RightsReserved.

Fig.116. OIL COOLER(CABIN)

(A)=EG326Y
(B)=EG328Y
(C)=EG330Y
(D)=EG334Y
(E)=
(F)=

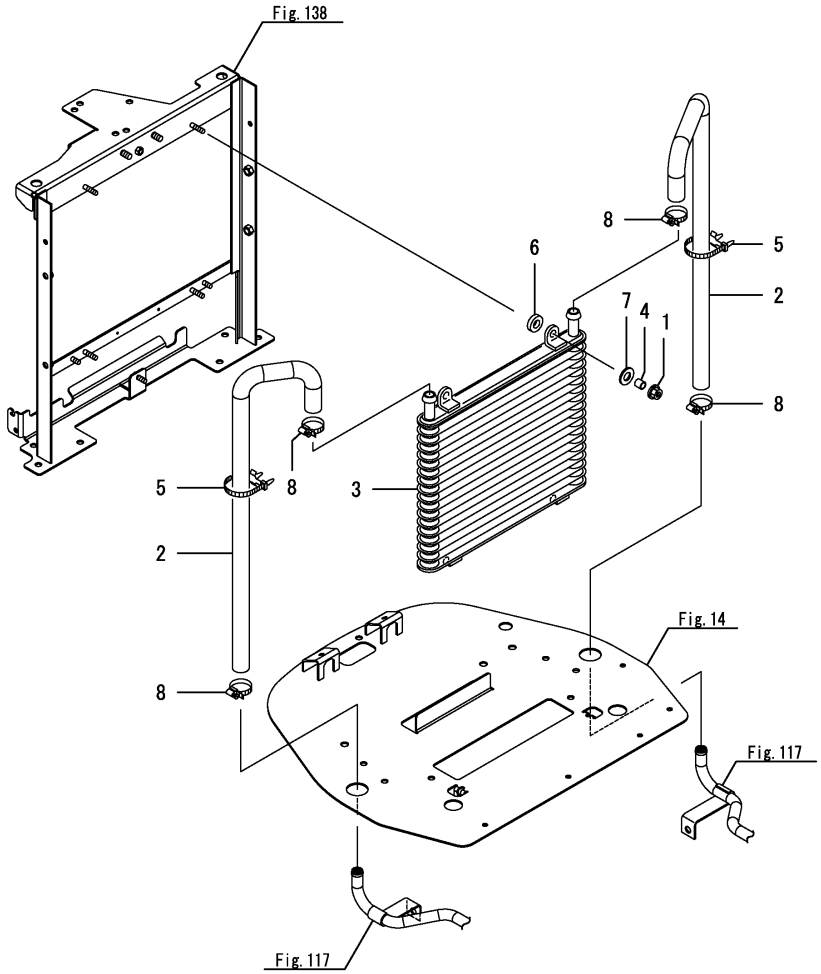

No.	Lev.	Parts No.	Description	Q'ty (A)	(B)	(C)	(D)	(E)	(F)	I	R
1	1	194990-22130	NUT, M6	4	4	4	4				
2	1	1A7180-48790	HOSE, OIL COOLER	2	2	2	2				
3	1	198138-49100	COOLER ASSY, OIL	1	1	1	1				
4	1	1A7180-49190	COLLAR, 9.0X7.0X9.0	4	4	4	4				
5	1	194680-51670	BAND, CLIP	2	2	2	2				
6	1	194420-62260	ABSORBER	4	4	4	4				
7	1	22137-100000	WASHER, 10	4	4	4	4				
8	1	23000-022000	CLAMP, 22	4	4	4	4				

N:Old $\xleftarrow[\text{No}]{\text{Yes}}$ New, Q:Old $\xleftarrow[\text{Yes}]{\text{No}}$ New, R:Old $\xleftarrow[\text{Yes}]{\text{Yes}}$ New, S:Old $\xleftarrow[\text{No}]{\text{No}}$ New, W:Add, Z:Discontinued, F:Interchangeable by set, K:Q'ty Change

Copyright (C) 2014 YANMAR CO., LTD. All RightsReserved.

Fig.117. OIL COOLER PIPE

(A)=EG326Y
(B)=EG328Y
(C)=EG330Y
(D)=EG334Y
(E)=
(F)=

No.	Lev.	Parts No.	Description	Q'ty (A)	(B)	(C)	(D)	(E)	(F)	I	R
1	1	1A7180-49260	PIPE, COOLER B	2	2	2	2				
2	1	1A7140-49350	PIPE ASSY, COOLER	1	1	1	1				
3	1	1A7140-49400	PIPE ASSY, COOLER IN	1	1	1	1				
4	1	23000-022000	CLAMP, 22	4	4	4	4				
5	1	26106-080162	BOLT, M8X 16 PLATED	2	2	2	2				
6	1	26106-080162	BOLT, M8X 16 PLATED	2	2	2	2				

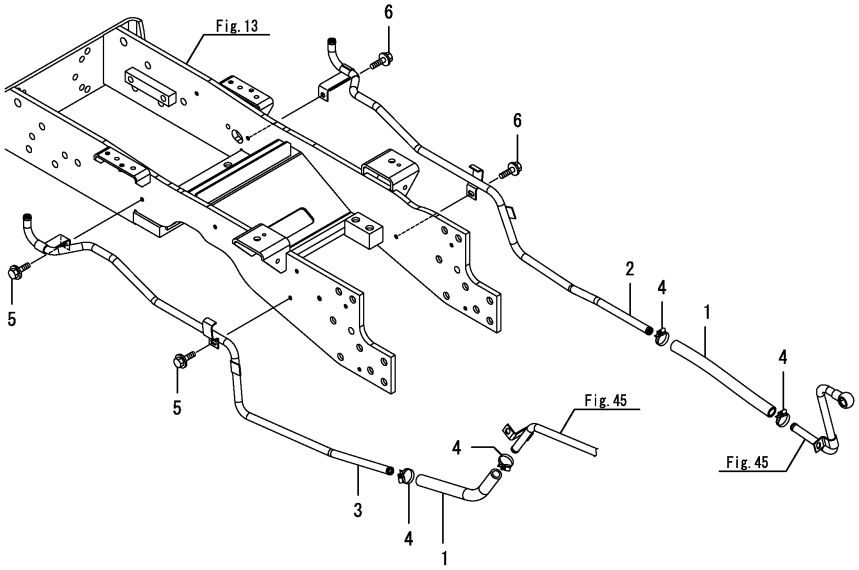

Remarks
* Applied to the following models.
EG326, EG328, EG330, EG334
EG330A(Cabin specification), EG334A(Cabin specification)

N:Old ◄Yes/No► New, Q:Old ◄No/Yes► New, R:Old ◄Yes/Yes► New, S:Old ◄No/No► New, W:Add, Z:Discontinued, F:Interchangeable by set, K:Q'ty Change

Copyright (C) 2014 YANMAR CO., LTD. All RightsReserved.

Fig.244. OIL COOLER PIPE(A,K,KW,KWA)

(A)=EG326Y
(B)=EG328Y
(C)=EG330Y
(D)=EG334Y
(E)=
(F)=

No.	Lev.	Parts No.	Description	Q'ty (A)	(B)	(C)	(D)	(E)	(F)	I	R
1	1	1A7180-49260	PIPE, COOLER B			2	2				
2	1	1A7160-49350	PIPE ASSY,COOLER OUT			1	1				
3	1	1A7160-49400	PIPE ASSY, COOLER IN			1	1				
4	1	23000-022000	CLAMP, 22			4	4				
5	1	26106-080162	BOLT, M8X 16 PLATED			2	2				
6	1	26106-080162	BOLT, M8X 16 PLATED			2	2				

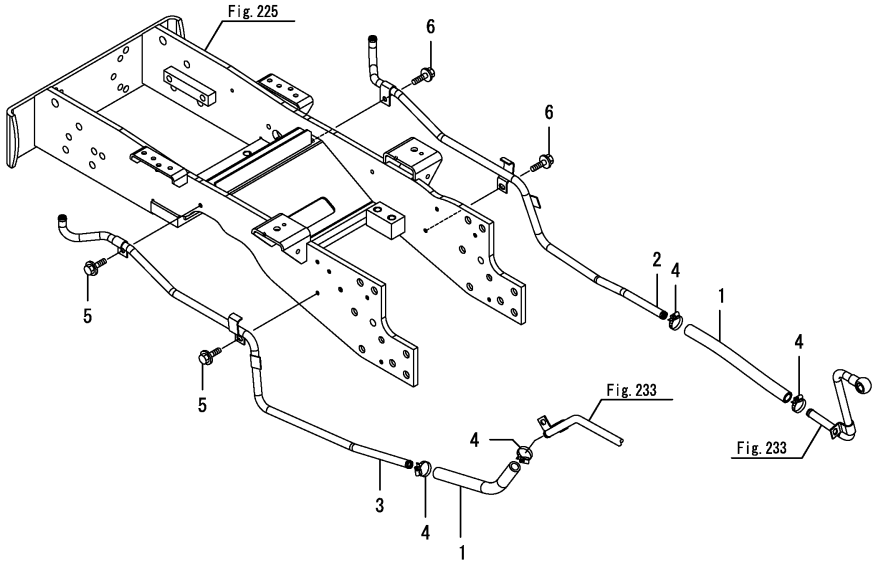

Remarks
* Applied to the following models.
EG330A(Rops specification), EG330K, EG330KW, EG334A(Rops specification), EG334KW, EG334KWA

N:Old ◄Yes/No► New, Q:Old ◄No/Yes► New, R:Old ◄Yes/Yes► New, S:Old ◄No/No► New, W:Add, Z:Discontinued, F:Interchangeable by set, K:Q'ty Change

Copyright (C) 2014 YANMAR CO., LTD. All RightsReserved.

Fig.243. HOSE GUARD(A,K,KW)

(A)=EG326Y
(B)=EG328Y
(C)=EG330Y
(D)=EG334Y
(E)=
(F)=

No.	Lev.	Parts No.	Description	Q'ty (A)	(B)	(C)	(D)	(E)	(F)	I	R
1	1	194990-22140	NUT, M8			1	1				
2	1	1A7160-48810	GUARD A			1	1				
3	1	1A7160-76110	COVER, UNDER PTO			1	1				
4	1	26013-140302	BOLT, M14X 30			2	2				
5	1	26106-080162	BOLT, M8X 16 PLATED			4	4				
6	1	26106-080162	BOLT, M8X 16 PLATED			2	2				

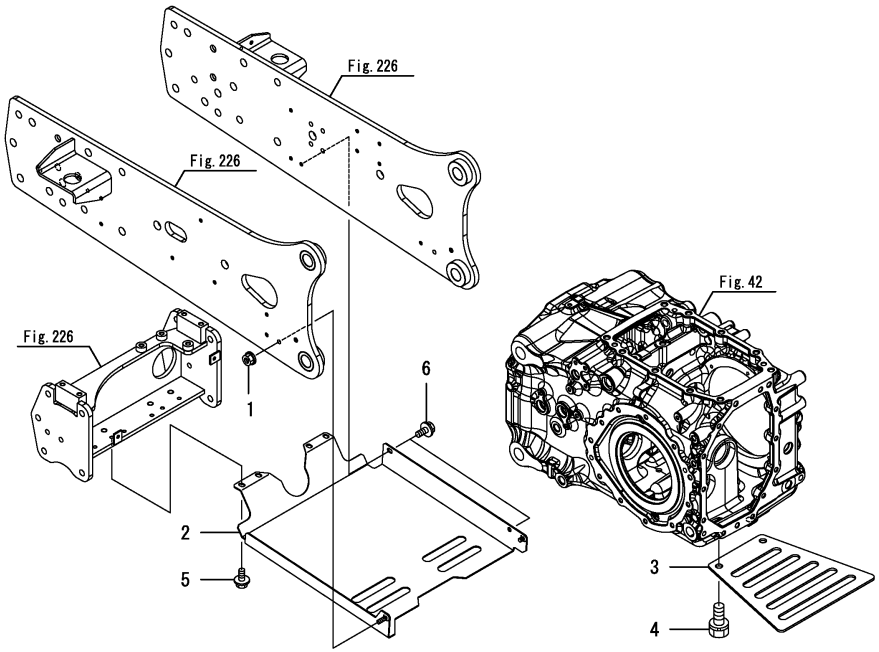

Remarks
* Applied to the following models.
EG330A(Rops specification), EG330K, EG330KW, EG334A(Rops specification), EG334KW

N:Old ◄Yes/No► New, Q:Old ◄No/Yes► New, R:Old ◄Yes/Yes► New, S:Old ◄No/No► New, W:Add, Z:Discontinued, F:Interchangeable by set, K:Q'ty Change

Copyright (C) 2014 YANMAR CO., LTD. All RightsReserved.

Fig.285. HOSE GUARD(KWA)

(A)=EG326Y
(B)=EG328Y
(C)=EG330Y
(D)=EG334Y
(E)=
(F)=

No.	Lev.	Parts No.	Description	Q'ty (A)	(B)	(C)	(D)	(E)	(F)	I	R
1	1	194990-22140	NUT, M8				1				
2	1	1A7160-48810	GUARD A				1				
3	1	26106-080162	BOLT, M8X 16 PLATED				6				

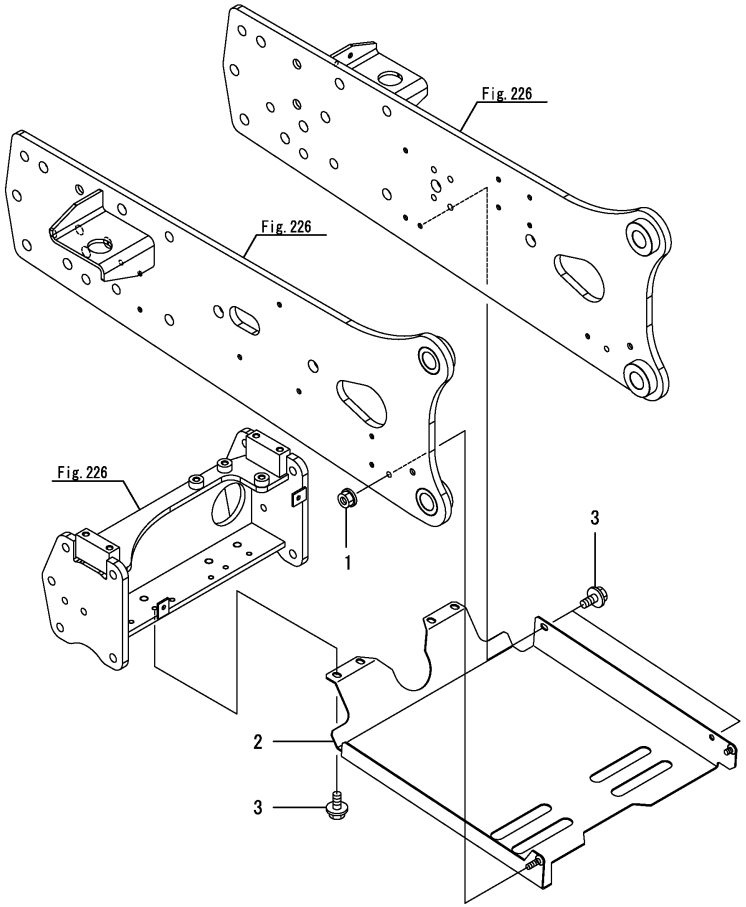

Remarks
* Applied to the following models.
EG334KWA

N:Old $\xleftarrow[\text{No}]{\text{Yes}}$ New, Q:Old $\xleftarrow[\text{Yes}]{\text{No}}$ New, R:Old $\xleftarrow[\text{Yes}]{\text{Yes}}$ New, S:Old $\xleftarrow[\text{No}]{\text{No}}$ New, W:Add, Z:Discontinued, F:Interchangeable by set, K:Q'ty Change

Copyright (C) 2014 YANMAR CO., LTD. All RightsReserved.

Fig.118. WIRE HARNESS(F)

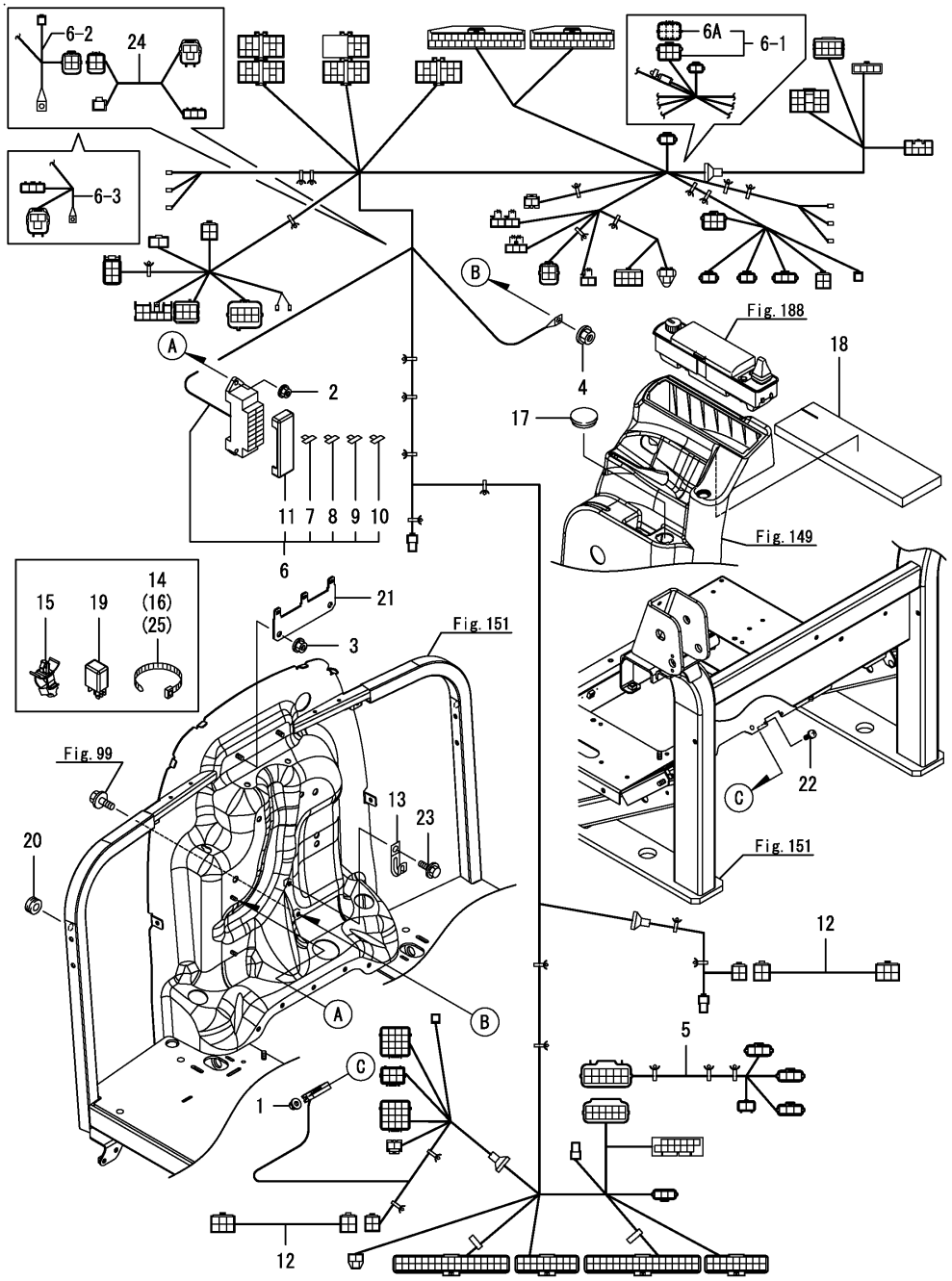

(A)=EG326Y (D)=EG334Y
(B)=EG328Y (E)=
(C)=EG330Y (F)=

No.	Lev.	Parts No.	Description	Q'ty (A)	(B)	(C)	(D)	(E)	(F)	I	R
1	1	194990-22110	NUT, M4	2	2	2	2				
2	1	194990-22130	NUT, M6	2	2	2	2				
3	1	194990-22140	NUT, M8	2	2	2	2				
4	1	194990-22140	NUT, M8	1	1	1	1				
5	1	1A7180-51020	HARNESS, WIRE	1	1	1	1				
6	1	1A7180-51161	HARNESS, WIRE	1	1	1	1				
6-1	1	1A7180-51260	HARNESS ASSY, F ROPS	1	1	1	1			S	
	(A=F090706)	(B=F080594)	(C=F071251) (D=F061080)								
6-2	1	1A7180-51261	HARNESS ASSY, F ROPS	1	1	1	1			S	
	(A=F090860)	(B=F080714)	(C=F072128) (D=F061985)								
6-3	1	1A7180-51262	HARNESS ASSY, F ROPS	1	1	1	1			S	
	(A=F100013)	(B=F200010)	(C=F300036) (D=F400022)								
6A	2	1A7180-51250	COUPLER,SELECT	1	1	1	1			W	
	(A=F090706)	(B=F080594)	(C=F071251) (D=F061080)								
7	2	198535-52110	FUSE, 5A	6	6	6	6				
8	2	198535-52120	FUSE, 10A	6	6	6	6				
9	2	198535-52130	FUSE, 15A	2	2	2	2				
10	2	198535-52140	FUSE, 20A	4	4	4	4				
11	2	198535-52410	COVER, FUSE BOX	1	1	1	1				
12	1	1A7180-51180	HARNESS, WIRE	2	2	2	2				
13	1	198448-51460	CLAMP, HARNESS	1	1	1	1				
14	1	29622-140001	BAND, RF140	1	1	1	1				
15	1	194680-51670	BAND, CLIP	1	1	1	1				
16	1	198153-51810	BAND, NYLON 150	1	1	1	1				
17	1	1A7591-52410	GROMMET, 31	1	1	1	1				
18	1	1A7180-58010	URETHANE	1	1	1	1				
19	1	1K1140-82500	RELAY(ACM13211M01	9	9	9	9				
20	1	197830-85490	GROMMET	2	2	2	2				
20-1	1	1E8050-05510	GROMMET, SLIT 16X3	2	2	2	2			N	
	(A=F090101)	(B=F080101)	(C=F070101) (D=F060101)								
20-2	1	197830-85490	GROMMET	2	2	2	2			N	
	(A=F100008)	(B=F200001)	(C=F300001) (D=F400004)								
21	1	1A7180-86690	BRACKET	1	1	1	1				
22	1	26022-040122	SCREW, M4X12	2	2	2	2				
23	1	26106-080162	BOLT, M8X 16 PLATED	1	1	1	1				
24	1	1A7180-51980	HARNESS, GYRO	1	1	1	1			W	
	(A=F090860)	(B=F080714)	(C=F072128) (D=F061985)								
24-1	1	1A7180-51980	HARNESS, GYRO	1	1	1	1			Z	
	(A=F100013)	(B=F200010)	(C=F300036) (D=F400022)								
25	1	29622-250001	BAND, RF250	1	1	1	1			W	
	(A=F090860)	(B=F080714)	(C=F072128) (D=F061985)								
25-1	1	29622-250001	BAND, RF250	1	1	1	1			Z	
	(A=F100013)	(B=F200010)	(C=F300036) (D=F400022)								

N:Old $\xleftarrow[\text{No}]{\text{Yes}}$ New, Q:Old $\xleftarrow[\text{Yes}]{\text{No}}$ New, R:Old $\xleftarrow[\text{Yes}]{\text{Yes}}$ New, S:Old $\xleftarrow[\text{No}]{\text{No}}$ New, W:Add, Z:Discontinued, F:Interchangeable by set, K:Q'ty Change

Copyright (C) 2014 YANMAR CO., LTD. All RightsReserved.

Fig.119. WIRE HARNESS(F)(CABIN)

(A)=EG326Y (D)=EG334Y
(B)=EG328Y (E)=
(C)=EG330Y (F)=

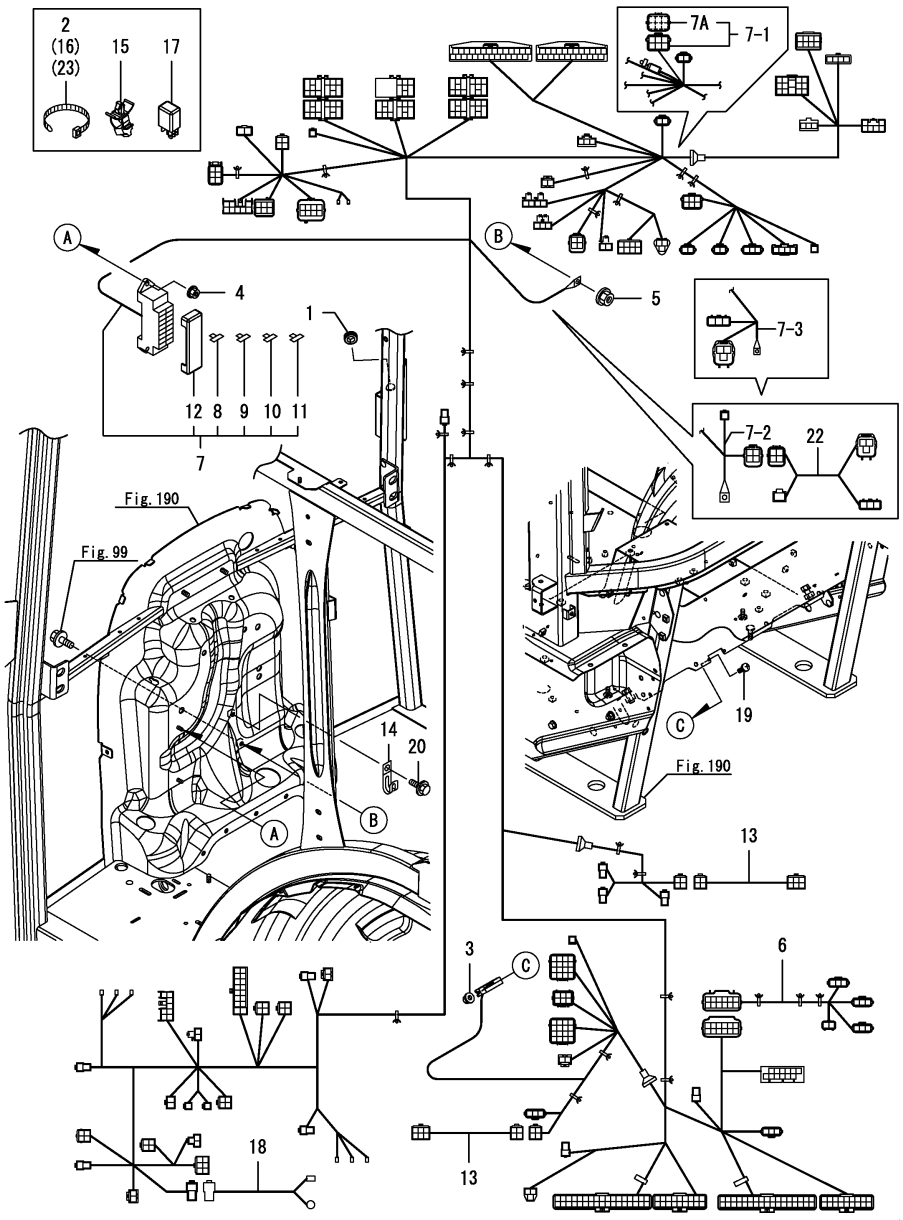

No.	Lev.	Parts No.	Description	Q'ty (A)	(B)	(C)	(D)	(E)	(F)	I	R
1	1	1E8050-05510	GROMMET, SLIT 16X3	2	2	2	2				
1-1	1	198360-03260	GROMMET, 12	2	2	2	2			N	
	(A=F090405)	(B=F080327)	(C=F070825) (D=F060757)								
2	1	29622-140001	BAND, RF140	1	1	1	1				
3	1	194990-22110	NUT, M4	2	2	2	2				
4	1	194990-22130	NUT, M6	2	2	2	2				
5	1	194990-22140	NUT, M8	1	1	1	1				
6	1	1A7180-51020	HARNESS, WIRE	1	1	1	1				
7	1	1A7210-51162	HARNESS, WIRE	1	1	1	1				
7-1	1	1A7210-51260	HARNESS ASSY, F CAB	1	1	1	1			S	
	(A=F090706)	(B=F080594)	(C=F071251) (D=F061080)								
7-2	1	1A7210-51261	HARNESS ASSY, F CAB	1	1	1	1			S	
	(A=F090860)	(B=F080714)	(C=F072128) (D=F061985)								
7-3	1	1A7210-51262	HARNESS ASSY, F CAB	1	1	1	1			S	
	(A=F100013)	(B=F200010)	(C=F300036) (D=F400022)								
7A	2	1A7180-51250	COUPLER,SELECT	1	1	1	1			W	
	(A=F090706)	(B=F080594)	(C=F071251) (D=F061080)								
8	2	198535-52110	FUSE, 5A	6	6	6	6				
9	2	198535-52120	FUSE, 10A	7	7	7	7				
10	2	198535-52130	FUSE, 15A	6	6	6	6				
11	2	198535-52140	FUSE, 20A	5	5	5	5				
12	2	198535-52410	COVER, FUSE BOX	1	1	1	1				
13	1	1A7180-51180	HARNESS, WIRE	2	2	2	2				
14	1	198448-51460	CLAMP, HARNESS	1	1	1	1				
15	1	194680-51670	BAND, CLIP	1	1	1	1				
16	1	198153-51810	BAND, NYLON 150	1	1	1	1				
17	1	1K1140-82500	RELAY(ACM13211M01	11	11	11	11				
18	1	198146-86120	WIRE, LEAD	1	1	1	1				
19	1	26022-040122	SCREW, M4X12	2	2	2	2				
20	1	26106-080162	BOLT, M8X 16 PLATED	1	1	1	1				
22	1	1A7180-51980	HARNESS, GYRO	1	1	1	1			W	
	(A=F090860)	(B=F080714)	(C=F072128) (D=F061985)								
22-1	1	1A7180-51980	HARNESS, GYRO	1	1	1	1			Z	
	(A=F100013)	(B=F200010)	(C=F300036) (D=F400022)								
23	1	29622-250001	BAND, RF250	1	1	1	1			W	
	(A=F090860)	(B=F080714)	(C=F072128) (D=F061985)								
23-1	1	29622-250001	BAND, RF250	1	1	1	1			Z	
	(A=F100013)	(B=F200010)	(C=F300036) (D=F400022)								

Remarks
* Applied to the following models.
EG326, EG328, EG330, EG330A, EG334, EG334A

N:Old $\frac{\text{Yes}}{\text{No}}$ New, Q:Old $\frac{\text{No}}{\text{Yes}}$ New, R:Old $\frac{\text{Yes}}{\text{Yes}}$ New, S:Old $\frac{\text{No}}{\text{No}}$ New, W:Add, Z:Discontinued, F:Interchangeable by set, K:Q'ty Change

Copyright (C) 2014 YANMAR CO., LTD. All RightsReserved.

Fig.245. WIRE HARNESS(F) (A,K,KW,KWA)

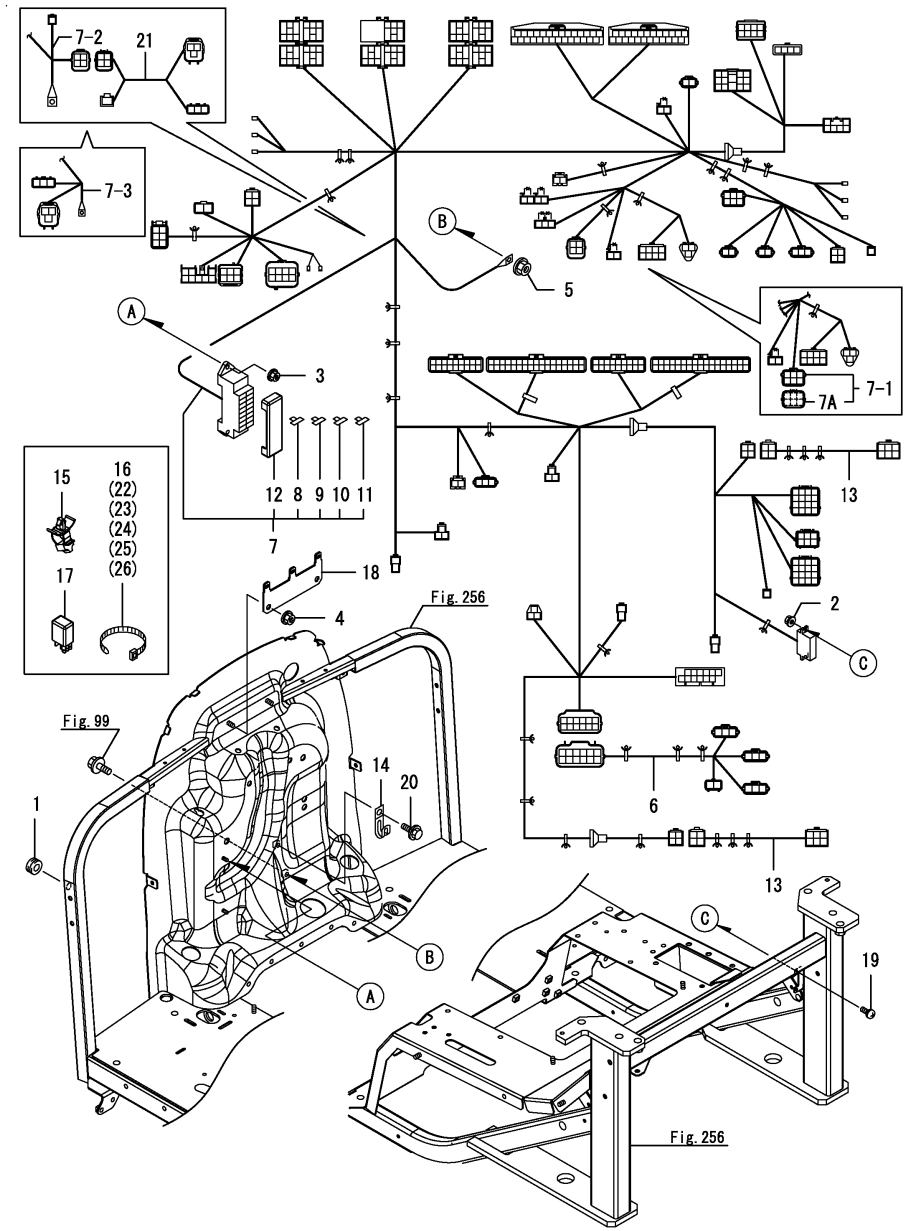

(A)=EG326Y (D)=EG334Y
(B)=EG328Y (E)=
(C)=EG330Y (F)=

No.	Lev.	Parts No.	Description	Q'ty (A)	(B)	(C)	(D)	(E)	(F)	I	R
1	1	197830-85490	GROMMET			2	2			N	
2	1	194990-22110	NUT, M4			2	2				
3	1	194990-22130	NUT, M6			2	2				
4	1	194990-22140	NUT, M8			2	2				
5	1	194990-22140	NUT, M8			1	1				
6	1	1A7180-51020	HARNESS, WIRE			1	1				
7	1	1A7160-51160	WIRE HARNESS ASSY, F			1	1				
7-1	1	1A7160-51260	HARNESS ASSY, F ROPS (C=F071251) (D=F061080)			1	1			S	
7-2	1	1A7160-51261	HARNESS ASSY, F ROPS (C=F072128) (D=F061985)			1	1			S	
7-3	1	1A7160-51262	HARNESS ASSY, F ROPS (C=F300036) (D=F400022)			1	1			S	
7A	2	1A7180-51250	COUPLER,SELECT (C=F071251) (D=F061080)			1	1			W	
8	2	198535-52110	FUSE, 5A			6	6				
9	2	198535-52120	FUSE, 10A			6	6				
10	2	198535-52130	FUSE, 15A			2	2				
11	2	198535-52140	FUSE, 20A			4	4				
12	2	198535-52410	COVER, FUSE BOX			1	1				
13	1	1A7160-51180	WIRE HARNESS, REAR			2	2				
14	1	198448-51460	CLAMP, HARNESS			1	1				
15	1	194680-51670	BAND, CLIP			1	1				
16	1	198153-51810	BAND, NYLON 150			1	1				
17	1	1K1140-82500	RELAY(ACM13211M01			10	10				
17-1	1	1K1140-82500	RELAY(ACM13211M01 (C=F070102) (D=F060101)			11	11			K	
18	1	1A7180-86690	BRACKET			1	1				
19	1	26022-040122	SCREW, M4X12			2	2				
20	1	26106-080162	BOLT, M8X 16 PLATED			1	1				
20-1	1	26106-080122	BOLT, M8X 12 PLATED (C=F070102) (D=F060101)			1	1			N	
21	1	1A7180-51980	HARNESS, GYRO (C=F072128) (D=F061985)			1	1			W	
21-1	1	1A7180-51980	HARNESS, GYRO (C=F300036) (D=F400022)			1	1			Z	
22	1	29622-250001	BAND, RF250 (C=F072128) (D=F061985)			1	1			W	
22-1	1	29622-250001	BAND, RF250 (C=F300036) (D=F400022)			1	1			Z	
23	1	29622-140001	BAND, RF140 (C=F070102) (D=F060101)			1	1			W	
24	1	29622-140001	BAND, RF140 (C=F070945) (D=F060918)			1	1			W	
25	1	29622-140001	BAND, RF140			1	1				
26	1	29622-250001	BAND, RF250			4	4				

Remarks
* Applied to the following models.
EG330A, EG330K, EG330KW, EG334A, EG334KW, EG334KWA

N:Old $\xleftarrow[\text{No}]{\text{Yes}}$ New, Q:Old $\xleftarrow[\text{Yes}]{\text{No}}$ New, R:Old $\xleftarrow[\text{Yes}]{\text{Yes}}$ New, S:Old $\xleftarrow[\text{No}]{\text{No}}$ New, W:Add, Z:Discontinued, F:Interchangeable by set, K:Q'ty Change

Copyright (C) 2014 YANMAR CO., LTD. All RightsReserved.

Fig.293. WIRE HARNESS(F) (SIMPLE)

(A)=EG326Y
(B)=EG328Y
(C)=EG330Y
(D)=EG334Y
(E)=
(F)=

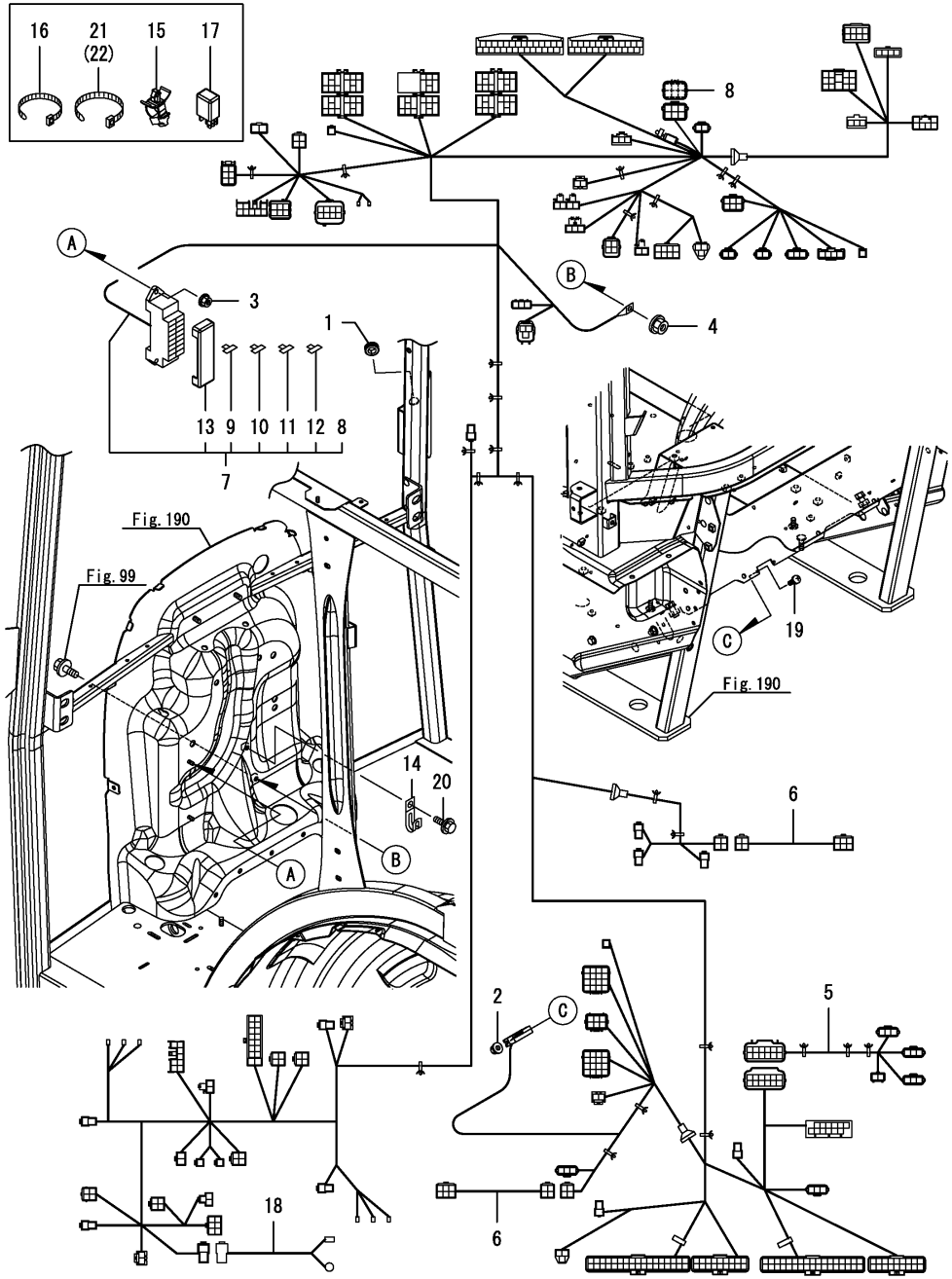

No.	Lev.	Parts No.	Description	Q'ty (A)	(B)	(C)	(D)	(E)	(F)	I	R
1	1	198360-03260	GROMMET, 12				2				
2	1	194990-22110	NUT, M4				2				
3	1	194990-22130	NUT, M6				2				
4	1	194990-22140	NUT, M8				1				
5	1	1A7180-51020	HARNESS, WIRE				1				
6	1	1A7180-51180	HARNESS, WIRE				2				
7	1	1A7210-51262	HARNESS ASSY, F CAB				1				
8	2	1A7180-51250	COUPLER,SELECT				1				
9	2	198535-52110	FUSE, 5A				6				
10	2	198535-52120	FUSE, 10A				7				
11	2	198535-52130	FUSE, 15A				6				
12	2	198535-52140	FUSE, 20A				5				
13	2	198535-52410	COVER, FUSE BOX				1				
14	1	198448-51460	CLAMP, HARNESS				1				
15	1	194680-51670	BAND, CLIP				1				
16	1	198153-51810	BAND, NYLON 150				1				
17	1	1K1140-82500	RELAY(ACM13211M01				11				
18	1	198146-86120	WIRE, LEAD				1				
19	1	26022-040122	SCREW, M4X12				2				
20	1	26106-080162	BOLT, M8X 16 PLATED				1				
21	1	29622-140001	BAND, RF140				1				
22	1	29622-140001	BAND, RF140				2				

N:Old $\xleftarrow[\text{No}]{\text{Yes}}$ New, Q:Old $\xleftarrow[\text{Yes}]{\text{No}}$ New, R:Old $\xleftrightarrow[\text{Yes}]{\text{Yes}}$ New, S:Old $\xleftrightarrow[\text{No}]{\text{No}}$ New, W:Add, Z:Discontinued, F:Interchangeable by set, K:Q'ty Change

Copyright (C) 2014 YANMAR CO., LTD. All RightsReserved.

Fig.120. WIRE HARNESS(A)

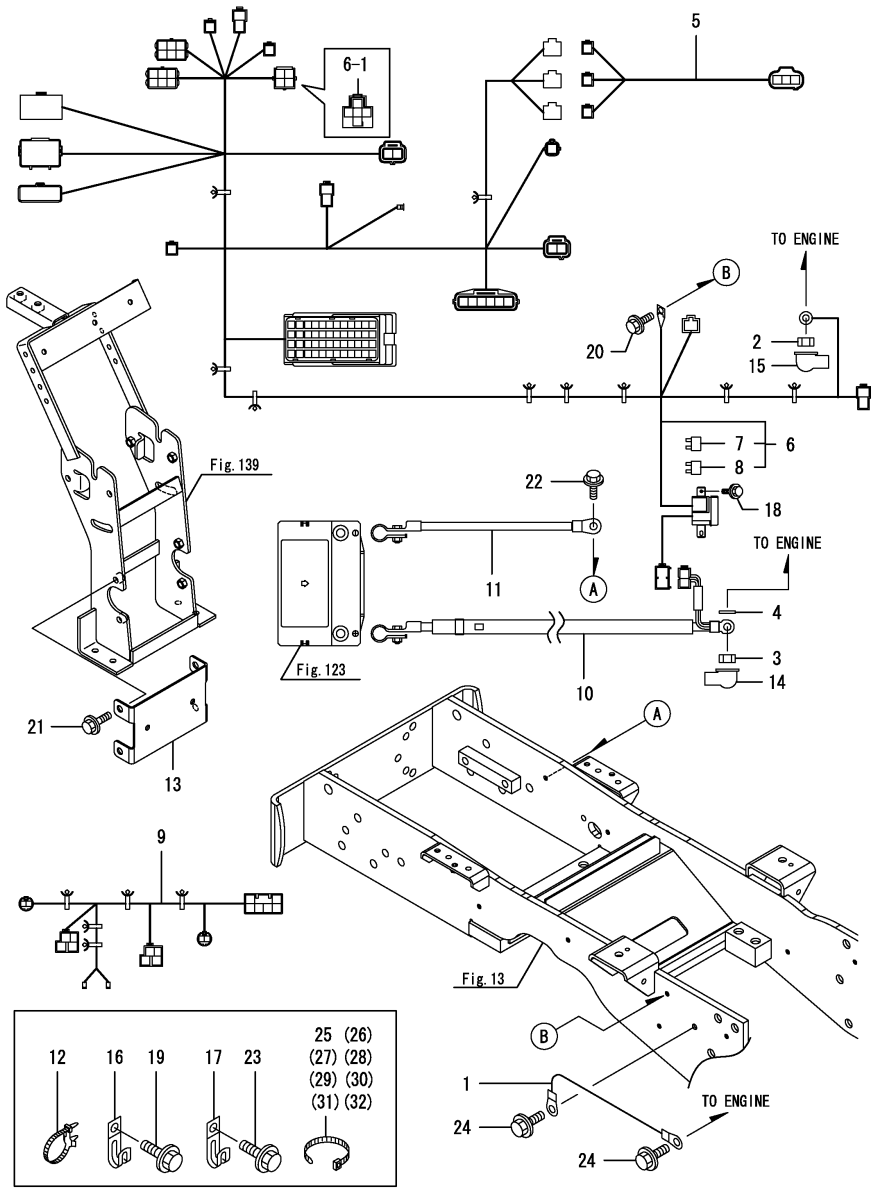

(A)=EG326Y (D)=EG334Y
(B)=EG328Y (E)=
(C)=EG330Y (F)=

No.	Lev.	Parts No.	Description	Q'ty (A)	(B)	(C)	(D)	(E)	(F)	I	R
1	1	1D4220-16250	WIRE, ENGINE	1	1	1	1				
2	1	194990-22130	NUT, M6	1	1	1	1				
3	1	194990-22140	NUT, M8	1	1	1	1				
4	1	1C6053-32020	WASHER, 8.5X20X3.2	1	1	1	1				
5	1	1A7180-51040	HARNESS, WIRE	1	1	1	1				
6	1	1A7180-51111	HARNESS ASSY, WIRE A	1	1	1	1				
6-1	1	1A7185-51110	HARNESS ASSY, A	1	1	1	1			S	
	(A=F090706)	(B=F080594)	(C=F071251) (D=F061080)								
7	2	1C6900-06180	FUSE, SLOW BLOW 80A	2	2	2	2				
8	2	1A7000-52820	FUSE, SLOW BLOW 60A	2	2	2	2				
9	1	1A7180-51310	HARNESS, WIRE	1	1	1	1				
10	1	1A7180-51350	CABLE, BATTERY	1	1	1	1				
11	1	194250-51420	CABLE, BATTERY EARTH	1	1	1	1				
12	1	194680-51670	BAND, CLIP	5	5	5	5				
13	1	1A7180-60890	COVER, HARNESS	1	1	1	1				
14	1	124550-77030	COVER, TERMINAL	1	1	1	1				
15	1	124756-77040	COVER, TERMINAL	1	1	1	1				
16	1	1E6102-83230	CLAMP, CABLE	1	1	1	1				
17	1	1E8945-85480	CLAMP, 14	1	1	1	1				
18	1	26106-060122	BOLT, M6X 12 PLATED	2	2	2	2				
19	1	26106-080122	BOLT, M8X 12 PLATED	1	1	1	1				
20	1	26106-080162	BOLT, M8X 16 PLATED	1	1	1	1				
21	1	26106-080162	BOLT, M8X 16 PLATED	4	4	4	4				
22	1	26106-080162	BOLT, M8X 16 PLATED	1	1	1	1				
23	1	26106-080162	BOLT, M8X 16 PLATED	1	1	1	1				
24	1	26106-100162	BOLT, M10X 16 PLATED	2	2	2	2				
25	1	29622-140001	BAND, RF140	1	1	1	1				
26	1	29622-140001	BAND, RF140	1	1	1	1				
27	1	29622-140001	BAND, RF140	1	1	1	1				
28	1	29622-250001	BAND, RF250	1	1	1	1				
29	1	29622-140001	BAND, RF140	1	1	1	1				
30	1	29622-140001	BAND, RF140	1	1	1	1				
31	1	29622-140001	BAND, RF140	1	1	1	1				
32	1	29622-140001	BAND, RF140	1	1	1	1				

Remarks
* Applied to the following models.
EG326, EG328, EG330, EG334, EG334KWA
EG330A(Cabin specification), EG334A(Cabin specification)

N:Old $\frac{\text{Yes}}{\text{No}}$ New, Q:Old $\frac{\text{No}}{\text{Yes}}$ New, R:Old $\frac{\text{Yes}}{\text{Yes}}$ New, S:Old $\frac{\text{No}}{\text{No}}$ New, W:Add, Z:Discontinued, F:Interchangeable by set, K:Q'ty Change

Copyright (C) 2014 YANMAR CO., LTD. All RightsReserved.

Fig.246. WIRE HARNESS(A) (A,K,KW)

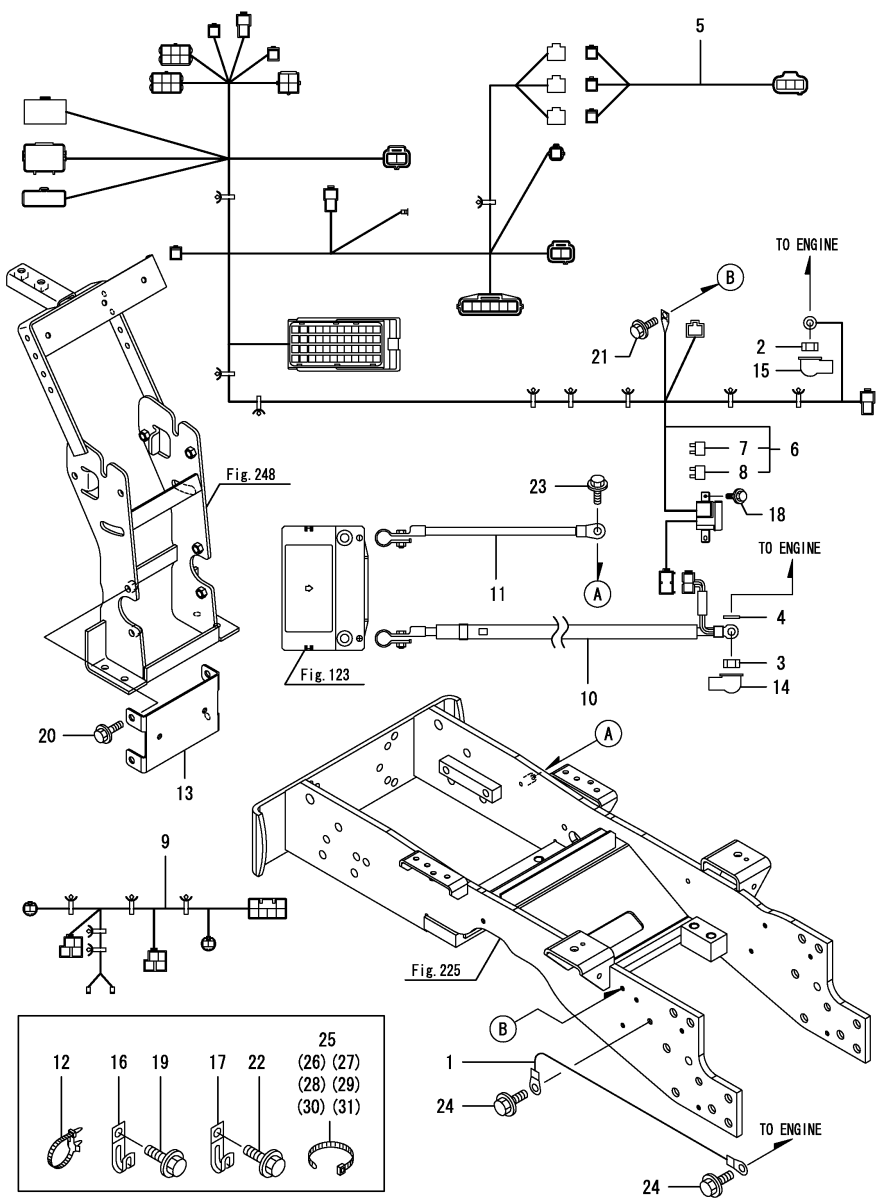

(A)=EG326Y (D)=EG334Y
(B)=EG328Y (E)=
(C)=EG330Y (F)=

No.	Lev.	Parts No.	Description	Q'ty (A)	(B)	(C)	(D)	(E)	(F)	I	R
1	1	1D4220-16250	WIRE, ENGINE (C=F070272) (D=F060261)			1	1			Z	
2	1	194990-22130	NUT, M6 (C=F070272) (D=F060261)			1	1			Z	
3	1	194990-22140	NUT, M8 (C=F070272) (D=F060261)			1	1			Z	
4	1	1C6053-32020	WASHER, 8.5X20X3.2 (C=F070272) (D=F060261)			1	1			Z	
5	1	1A7180-51040	HARNESS, WIRE (C=F070272) (D=F060261)			1	1			Z	
6	1	1A7180-51111	HARNESS ASSY, WIRE A (C=F070272) (D=F060261)			1	1			Z	
7	2	1C6900-06180	FUSE, SLOW BLOW 80A (C=F070272) (D=F060261)			2	2			Z	
8	2	1A7000-52820	FUSE, SLOW BLOW 60A (C=F070272) (D=F060261)			2	2			Z	
9	1	1A7180-51310	HARNESS, WIRE (C=F070272) (D=F060261)			1	1			Z	
10	1	1A7160-51350	CABLE, BATTERY PLUS (C=F070272) (D=F060261)			1	1			Z	
11	1	194250-51420	CABLE, BATTERY EARTH (C=F070272) (D=F060261)			1	1			Z	
12	1	194680-51670	BAND, CLIP (C=F070272) (D=F060261)			5	5			Z	
13	1	1A7180-60890	COVER, HARNESS (C=F070272) (D=F060261)			1	1			Z	
14	1	124550-77030	COVER, TERMINAL (C=F070272) (D=F060261)			1	1			Z	
15	1	124756-77040	COVER, TERMINAL (C=F070272) (D=F060261)			1	1			Z	
16	1	1E6102-83230	CLAMP, CABLE (C=F070272) (D=F060261)			1	1			Z	
17	1	1E8945-85480	CLAMP, 14 (C=F070272) (D=F060261)			1	1			Z	
18	1	26106-060122	BOLT, M6X 12 PLATED (C=F070272) (D=F060261)			2	2			Z	
19	1	26106-080122	BOLT, M8X 12 PLATED (C=F070272) (D=F060261)			1	1			Z	
20	1	26106-080162	BOLT, M8X 16 PLATED (C=F070272) (D=F060261)			4	4			Z	
21	1	26106-080162	BOLT, M8X 16 PLATED (C=F070272) (D=F060261)			1	1			Z	
22	1	26106-080162	BOLT, M8X 16 PLATED (C=F070272) (D=F060261)			1	1			Z	
23	1	26106-080162	BOLT, M8X 16 PLATED (C=F070272) (D=F060261)			1	1			Z	
24	1	26106-100162	BOLT, M10X 16 PLATED (C=F070272) (D=F060261)			2	2			Z	
25	1	29622-140001	BAND, RF140 (C=F070272) (D=F060261)			1	1			Z	
26	1	29622-140001	BAND, RF140			1	1			Z	

Remarks
* Referred to Fig.120 by a design change.
* Applied to the following models.
EG330A(Rops specification), EG330K, EG330KW, EG334A(Rops specification), EG334KW

N:Old $\xleftarrow[\text{No}]{\text{Yes}}$ New, Q:Old $\xleftarrow[\text{Yes}]{\text{No}}$ New, R:Old $\xleftarrow[\text{Yes}]{\text{Yes}}$ New, S:Old $\xleftarrow[\text{No}]{\text{No}}$ New, W:Add, Z:Discontinued, F:Interchangeable by set, K:Q'ty Change

++ CONTINUE ++

Copyright (C) 2014 YANMAR CO., LTD. All RightsReserved.

Fig.246. WIRE HARNESS(A) (A,K,KW)

(A)=EG326Y (D)=EG334Y
(B)=EG328Y (E)=
(C)=EG330Y (F)=

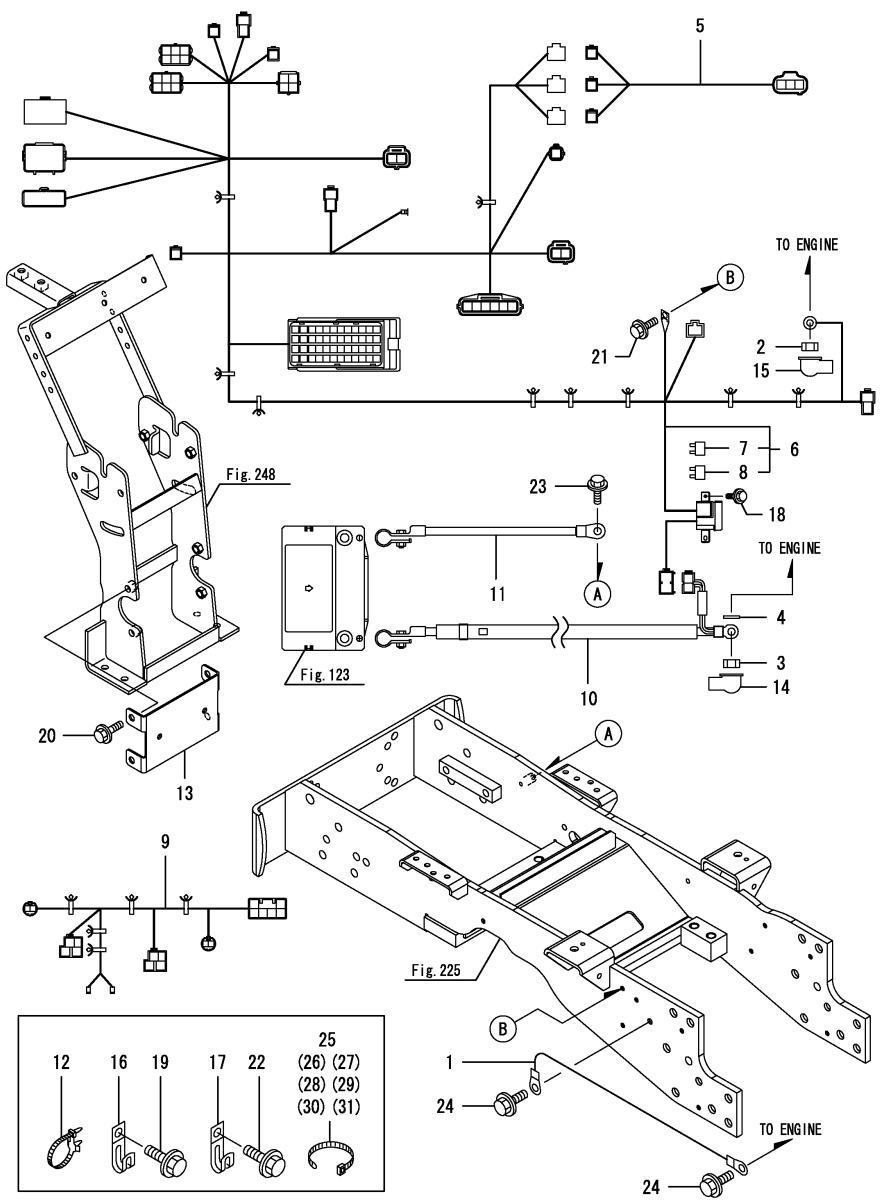

No.	Lev.	Parts No.	Description	Q'ty (A)	(B)	(C)	(D)	(E)	(F)	I	R
			(C=F070272) (D=F060261)								
27	1	29622-140001	BAND, RF140			1	1			Z	
			(C=F070272) (D=F060261)								
28	1	29622-140001	BAND, RF140			1	1			Z	
			(C=F070272) (D=F060261)								
29	1	29622-140001	BAND, RF140			1	1			Z	
			(C=F070272) (D=F060261)								
30	1	29622-140001	BAND, RF140			1	1			Z	
			(C=F070272) (D=F060261)								
31	1	29622-250001	BAND, RF250			1	1			Z	
			(C=F070272) (D=F060261)								

Remarks
* Referred to Fig.120 by a design change.
* Applied to the following models.
EG330A(Rops specification), EG330K, EG330KW, EG334A(Rops specification), EG334KW

N:Old ◄Yes/No► New, Q:Old ◄No/Yes► New, R:Old ◄Yes/Yes► New, S:Old ◄No/No► New, W:Add, Z:Discontinued, F:Interchangeable by set, K:Q'ty Change

Copyright (C) 2014 YANMAR CO., LTD. All RightsReserved.

Fig.121. WIRE HARNESS(AIR CONDITIONER)

(A)=EG326Y
(B)=EG328Y
(C)=EG330Y
(D)=EG334Y
(E)=
(F)=

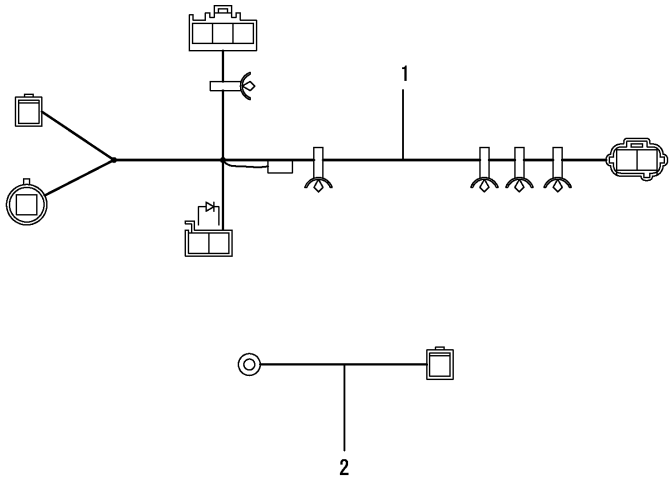

No.	Lev.	Parts No.	Description	Q'ty (A)	(B)	(C)	(D)	(E)	(F)	I	R
1	1	1A7210-51050	HARNESS, WIRE	1	1	1	1				
2	1	1A7210-51200	CABLE, EARTH	1	1	1	1				

N:Old $\xleftrightarrow[\text{No}]{\text{Yes}}$ New, Q:Old $\xleftrightarrow[\text{Yes}]{\text{No}}$ New, R:Old $\xleftrightarrow[\text{Yes}]{\text{Yes}}$ New, S:Old $\xleftrightarrow[\text{No}]{\text{No}}$ New, W:Add, Z:Discontinued, F:Interchangeable by set, K:Q'ty Change

Copyright (C) 2014 YANMAR CO., LTD. All RightsReserved.

Fig.122. WIRE HARNESS(B)

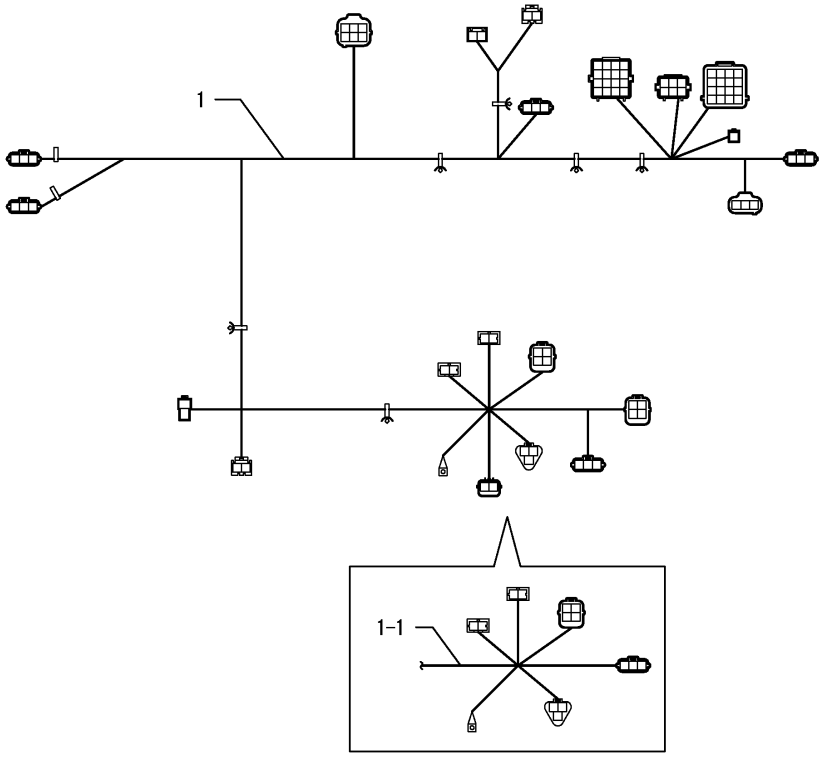

(A)=EG326Y (D)=EG334Y
(B)=EG328Y (E)=
(C)=EG330Y (F)=

No.	Lev.	Parts No.	Description	Q'ty (A)	(B)	(C)	(D)	(E)	(F)	I	R
1	1	1A7180-51140	HARNESS, WIRE	1	1	1	1				
1-1	1	1A7185-51140	HARNESS, B IHMT	1	1	1	1			S	
	(A=F090706)	(B=F080594)	(C=F071251) (D=F061080)								

N:Old $\xleftrightarrow[\text{No}]{\text{Yes}}$ New, Q:Old $\xleftrightarrow[\text{Yes}]{\text{No}}$ New, R:Old $\xleftrightarrow[\text{Yes}]{\text{Yes}}$ New, S:Old $\xleftrightarrow[\text{No}]{\text{No}}$ New, W:Add, Z:Discontinued, F:Interchangeable by set, K:Q'ty Change

Copyright (C) 2014 YANMAR CO., LTD. All RightsReserved.

Fig.123. BATTERY

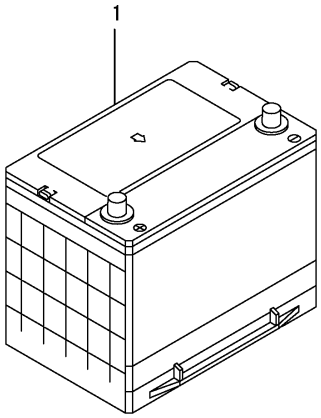

(A)=EG326Y
(B)=EG328Y
(C)=EG330Y
(D)=EG334Y
(E)=
(F)=

No.	Lev.	Parts No.	Description	Q'ty (A)	(B)	(C)	(D)	(E)	(F)	I	R
1	1	1A7000-51540	BATTERY, 80D26R	1	1	1	1				

N:Old $\xleftrightarrow[\text{No}]{\text{Yes}}$ New, Q:Old $\xleftrightarrow[\text{Yes}]{\text{No}}$ New, R:Old $\xleftrightarrow[\text{Yes}]{\text{Yes}}$ New, S:Old $\xleftrightarrow[\text{No}]{\text{No}}$ New, W:Add, Z:Discontinued, F:Interchangeable by set, K:Q'ty Change

Copyright (C) 2014 YANMAR CO., LTD. All RightsReserved.

Fig.124. BATTERY CLAMP

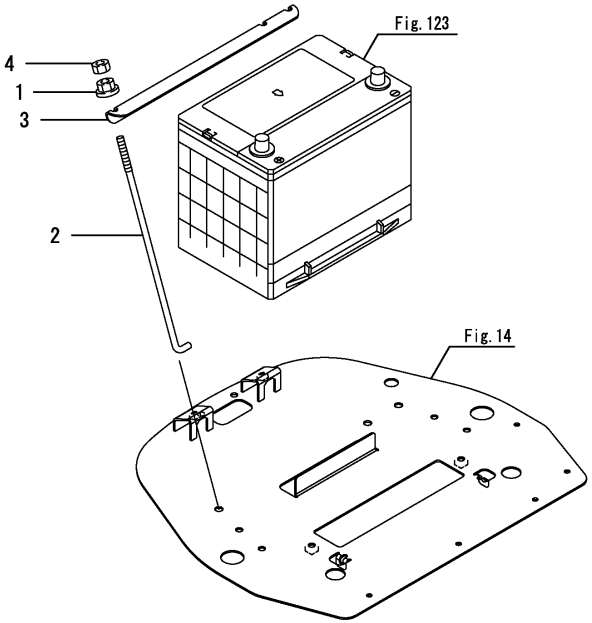

(A)=EG326Y (D)=EG334Y
(B)=EG328Y (E)=
(C)=EG330Y (F)=

No.	Lev.	Parts No.	Description	Q'ty (A)	(B)	(C)	(D)	(E)	(F)	I	R
1	1	194990-22140	NUT, M8	2	2	2	2				
2	1	198153-51540	ROD, BATTERY CLAMP	2	2	2	2				
2-1	1	198220-51570	ROD, BATTERY	2	2	2	2			N	
	(A=F090433)	(B=F080344)	(C=F070875) (D=F060844)								
3	1	1A7180-51560	CLAMP, BATTERY	1	1	1	1				
3-1	1	198200-61580	CLAMP, BATTERY	1	1	1	1			N	
	(A=F090433)	(B=F080344)	(C=F070875) (D=F060844)								
4	1	26716-080002	NUT, M8	2	2	2	2				

N:Old $\xleftrightarrow[\text{No}]{\text{Yes}}$ New, Q:Old $\xleftrightarrow[\text{Yes}]{\text{No}}$ New, R:Old $\xleftrightarrow[\text{Yes}]{\text{Yes}}$ New, S:Old $\xleftrightarrow[\text{No}]{\text{No}}$ New, W:Add, Z:Discontinued, F:Interchangeable by set, K:Q'ty Change

Copyright (C) 2014 YANMAR CO., LTD. All RightsReserved.

Fig.125. SWITCH(1)

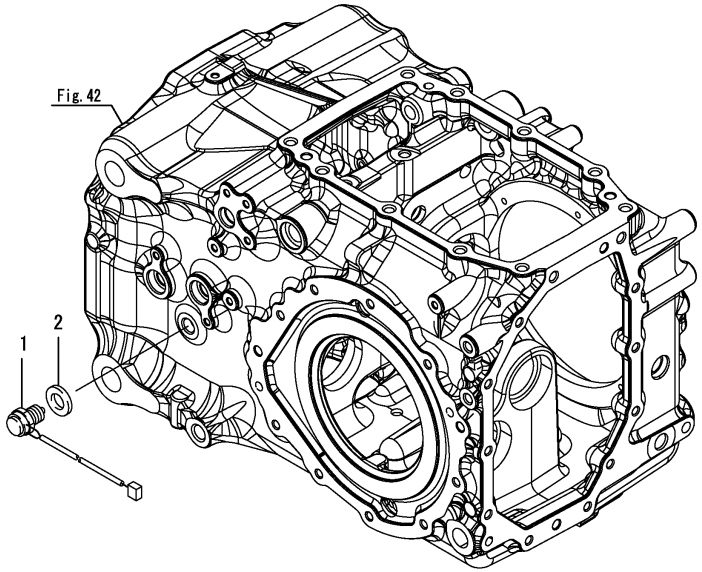

(A)=EG326Y (D)=EG334Y
(B)=EG328Y (E)=
(C)=EG330Y (F)=

No.	Lev.	Parts No.	Description	Q'ty (A)	(B)	(C)	(D)	(E)	(F)	I	R
1	1	1A7180-52190	SWITCH, SAFETY	1	1	1	1			Z	
	(A=F100008)	(B=F200001)	(C=F300001) (D=F400004)								
2	1	23414-180000	GASKET, 18X1.0	1	1	1	1				
2-2	1	24311-000180	O-RING, 1AP18.0	1	1	1	1			F	1
	(A=F090265)	(B=F080242)	(C=F070531) (D=F060498)								
2-3	1	24311-000180	O-RING, 1AP18.0	1	1	1	1			Z	
	(A=F100008)	(B=F200001)	(C=F300001) (D=F400004)								

Remarks
(1)Interchangeable by simultaneous replacement with No,2-2, Fig.42 No.2-1.

N:Old $\xleftrightarrow[\text{No}]{\text{Yes}}$ New, Q:Old $\xleftrightarrow[\text{Yes}]{\text{No}}$ New, R:Old $\xleftrightarrow[\text{Yes}]{\text{Yes}}$ New, S:Old $\xleftrightarrow[\text{No}]{\text{No}}$ New, W:Add, Z:Discontinued, F:Interchangeable by set, K:Q'ty Change

Copyright (C) 2014 YANMAR CO., LTD. All RightsReserved.

Fig.126. SWITCH(2)

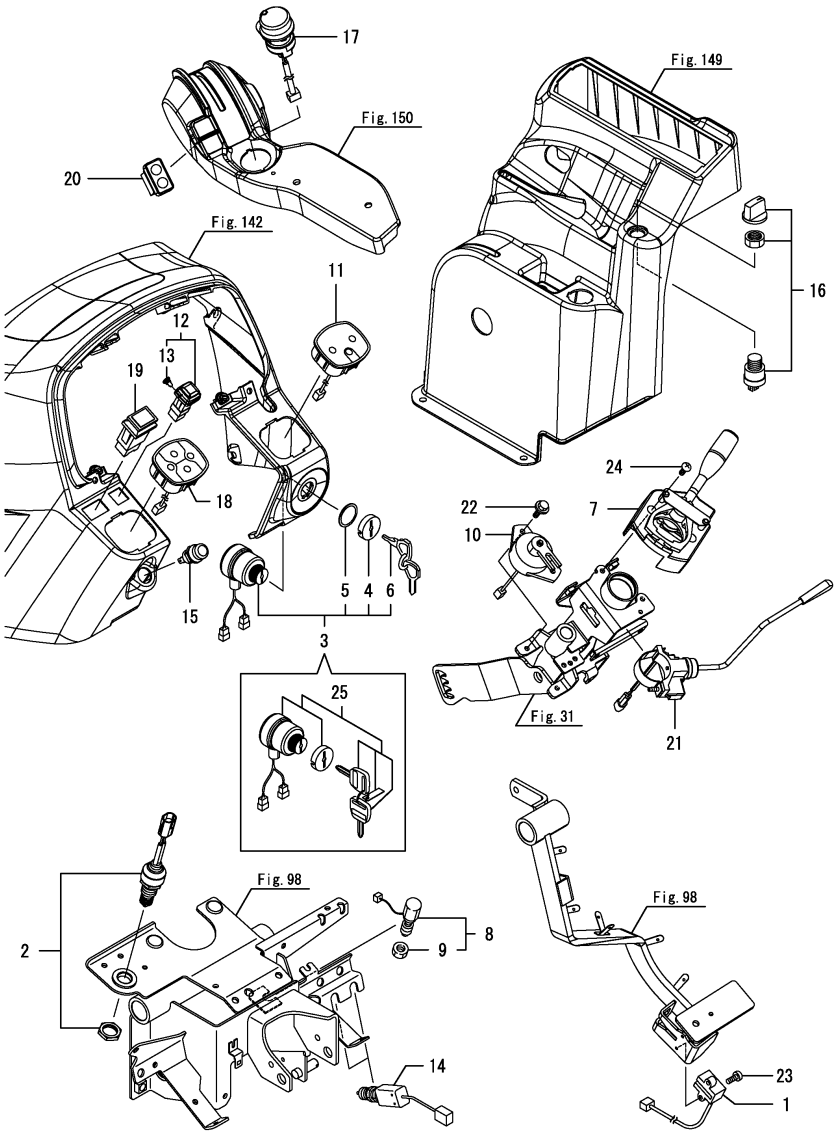

(A)=EG326Y (D)=EG334Y
(B)=EG328Y (E)=
(C)=EG330Y (F)=

No.	Lev.	Parts No.	Description	Q'ty (A)	(B)	(C)	(D)	(E)	(F)	I	R
1	1	1C6900-07200	SWITCH, COUPLING	1	1	1	1				
2	1	1D4180-17300	SWITCH, PUSH	1	1	1	1				
3	1	198162-52110	SWITCH, STARTING	1	1	1	1			Z	
	(A=F100093)	(B=F200070)	(C=F300261) (D=F400259)								
4	2	198360-52320	NUT, RING	1	1	1	1			Z	
	(A=F100093)	(B=F200070)	(C=F300261) (D=F400259)								
5	2	198360-52330	WASHER	1	1	1	1			Z	
	(A=F100093)	(B=F200070)	(C=F300261) (D=F400259)								
6	2	198162-52150	KEY ASSY	1	1	1	1			Z	
	(A=F100093)	(B=F200070)	(C=F300261) (D=F400259)								
7	1	1A7180-52140	SWITCH, COMBINATION	1	1	1	1				
8	1	198223-52150	SWITCH, STOP LAMP	1	1	1	1				
9	2	26776-120002	NUT, LOCK M12	1	1	1	1				
10	1	1A7480-52180	SWITCH, REVERSER	1	1	1	1				
10-1	1	1A7180-52180	SWITCH ASSY,REVERSER	1	1	1	1			N	
	(A=F100156)	(B=F200141)	(C=F300575) (D=F400655)								
11	1	1A7180-52210	SWITCH, STARTING	1	1	1	1				
12	1	1A7450-52210	SWITCH ASSY	1	1	1	1				
13	2	1A7450-52230	BULB, WITH SOCKET	1	1	1	1				
14	1	1A7600-52223	SWITCH, RANGE SHIFT	2	2	2	2				
14-1	1	1A7600-52224	SWITCH ASSY, BRAKE	2	2	2	2			N	
	(A=F090813)	(B=F080673)	(C=F071995) (D=F061817)								
15	1	1A7180-52240	SWITCH, HORN	1	1	1	1				
16	1	198448-52280	SWITCH, SELECTOR 3	1	1	1	1				
17	1	1A7450-52291	SWITCH, PTO ON-OFF	1	1	1	1				
18	1	1A7180-52310	SWITCH, FUNCTION	1	1	1	1				
19	1	1A7450-52450	SWITCH, HAZARD	1	1	1	1				
20	1	1A7591-52520	SWITCH, 2 POSITION	1	1	1	1				
21	1	1A7180-78610	SWITCH	1	1	1	1				
22	1	26106-060122	BOLT, M6X 12 PLATED	2	2	2	2				
23	1	26557-050162	SCREW, M5X16	1	1	1	1				
23-1	1	26557-050162	SCREW, M5X16	2	2	2	2			K	
	(A=F090706)	(B=F080594)	(C=F071677) (D=F061533)								
24	1	26557-060162	SCREW M 6X 16	2	2	2	2				
25	1	1A7180-52110	SWITCH ASSY, STARTER	1	1	1	1			W	1
	(A=F100093)	(B=F200070)	(C=F300261) (D=F400259)								

Remarks
(1)Individual Key
* Part number of a spare key for Individual Key : 1A7190-XXXX0 (Q'ty 1)
Please put the individual key number into XXXX portion of the part number.
Key number is indicated on a tag attached to an original key.
* No.25 is interchangeable for No.3.

N:Old ◄Yes/No► New, Q:Old ◄No/Yes► New, R:Old ◄Yes/Yes► New, S:Old ◄No/No► New, W:Add, Z:Discontinued, F:Interchangeable by set, K:Q'ty Change

Copyright (C) 2014 YANMAR CO., LTD. All RightsReserved.

Fig.127. SWITCH(2)(CABIN)

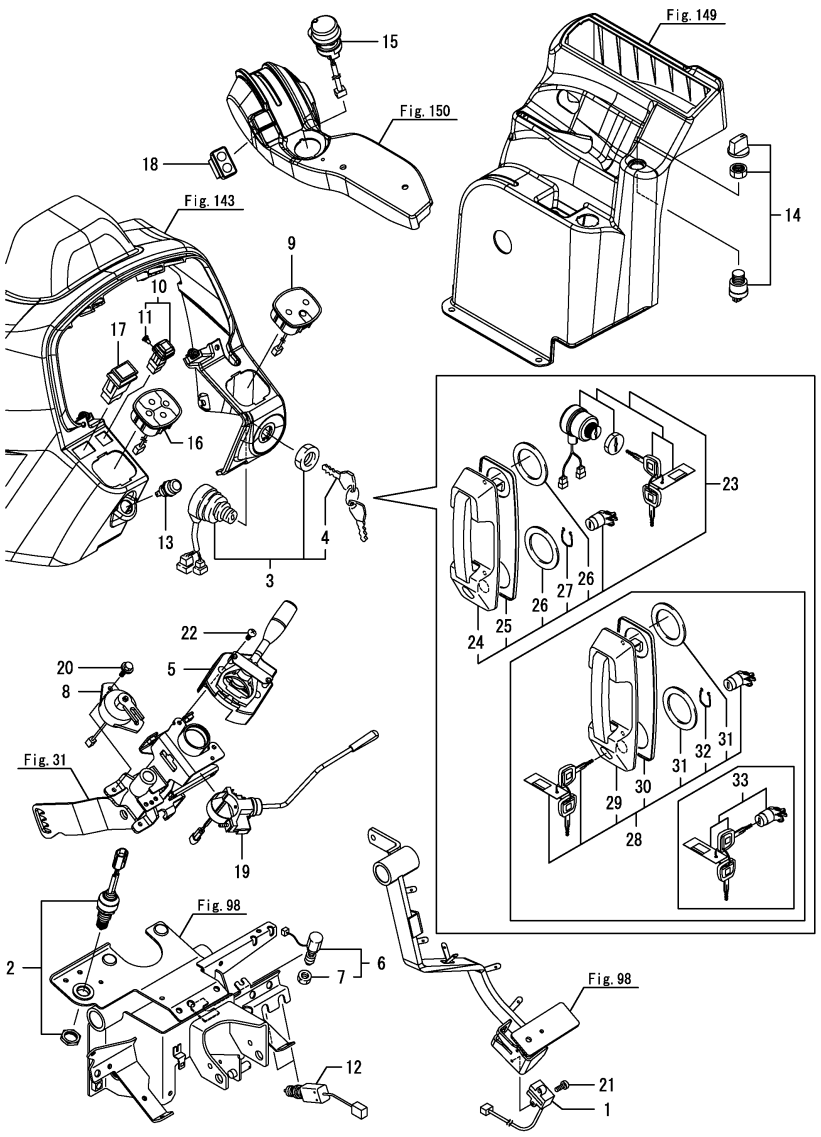

(A)=EG326Y (D)=EG334Y
(B)=EG328Y (E)=
(C)=EG330Y (F)=

No.	Lev.	Parts No.	Description	Q'ty (A)	(B)	(C)	(D)	(E)	(F)	I	R
1	1	1C6900-07200	SWITCH, COUPLING	1	1	1	1				
2	1	1D4180-17300	SWITCH, PUSH	1	1	1	1				
3	1	1A7850-52110	SWITCH ASSY, STARTER	1	1	1	1			Z	
	(A=F100093)	(B=F200070)	(C=F300261) (D=F400259)								
4	2	1A7850-52130	KEY ASSY	1	1	1	1			Z	
	(A=F100093)	(B=F200070)	(C=F300261) (D=F400259)								
5	1	1A7180-52140	SWITCH, COMBINATION	1	1	1	1				
6	1	198223-52150	SWITCH, STOP LAMP	1	1	1	1				
7	2	26776-120002	NUT, LOCK M12	1	1	1	1				
8	1	1A7480-52180	SWITCH, REVERSER	1	1	1	1				
8-1	1	1A7180-52180	SWITCH ASSY,REVERSER	1	1	1	1			N	
	(A=F100156)	(B=F200141)	(C=F300575) (D=F400655)								
9	1	1A7180-52210	SWITCH, STARTING	1	1	1	1				
10	1	1A7450-52210	SWITCH ASSY	1	1	1	1				
11	2	1A7450-52230	BULB, WITH SOCKET	1	1	1	1				
12	1	1A7600-52223	SWITCH, RANGE SHIFT	2	2	2	2				
12-1	1	1A7600-52224	SWITCH ASSY, BRAKE	2	2	2	2			N	
	(A=F090813)	(B=F080673)	(C=F071995) (D=F061817)								
13	1	1A7180-52240	SWITCH, HORN	1	1	1	1				
14	1	198448-52280	SWITCH, SELECTOR 3	1	1	1	1				
15	1	1A7450-52291	SWITCH, PTO ON-OFF	1	1	1	1				
16	1	1A7180-52310	SWITCH, FUNCTION	1	1	1	1				
17	1	1A7450-52450	SWITCH, HAZARD	1	1	1	1				
18	1	1A7591-52520	SWITCH, 2 POSITION	1	1	1	1				
19	1	1A7180-78610	SWITCH	1	1	1	1				
20	1	26106-060122	BOLT, M6X 12 PLATED	2	2	2	2				
21	1	26557-050162	SCREW, M5X16	2	2	2	2				
22	1	26557-060162	SCREW M 6X 16	2	2	2	2				
23	1	1A7210-52100	KEY KIT	1	1	1	1			W	1
	(A=F100093)	(B=F200070)	(C=F300261) (D=F400259)								
24	2	1A7470-82410	BODY, HANDLE	2	2	2	2			W	
	(A=F100093)	(B=F200070)	(C=F300261) (D=F400259)								
25	2	1A7470-82420	SEAT, OUTER HANDLE	2	2	2	2			W	
	(A=F100093)	(B=F200070)	(C=F300261) (D=F400259)								
26	2	1A7470-82580	SEAL, DOOR HANDLE	4	4	4	4			W	
	(A=F100093)	(B=F200070)	(C=F300261) (D=F400259)								
27	2	1A7470-82890	PIN, CYLINDER	2	2	2	2			W	
	(A=F100093)	(B=F200070)	(C=F300261) (D=F400259)								
28	1	1A7210-82850	KEY KIT, HANDLE	1	1	1	1				2
29	2	1A7470-82410	BODY, HANDLE	2	2	2	2				
30	2	1A7470-82420	SEAT, OUTER HANDLE	2	2	2	2				
31	2	1A7470-82580	SEAL, DOOR HANDLE	4	4	4	4				
32	2	1A7470-82890	PIN, CYLINDER	2	2	2	2				
33	1	1A7210-82870	KEY KIT, CYLINDER	1	1	1	1				2

Remarks
(1)Individual Key
(2)Individual Key. After replacing by this kit, the starter and the door handle become separate keys.
* Part number of a spare key for Individual Key : 1A7210-XXXX0 (Q'ty 1)
Please put the individual key number into XXXX portion of the part number.
Key number is indicated on a tag attached to an original key.
* No.23 is interchangeable for No.3 and Fig.191 No.16.

N:Old ←Yes/No→ New, Q:Old ←No/Yes→ New, R:Old ←Yes/Yes→ New, S:Old ←No/No→ New, W:Add, Z:Discontinued, F:Interchangeable by set, K:Q'ty Change

Copyright (C) 2014 YANMAR CO., LTD. All RightsReserved.

Fig.128. STEERING SWITCH

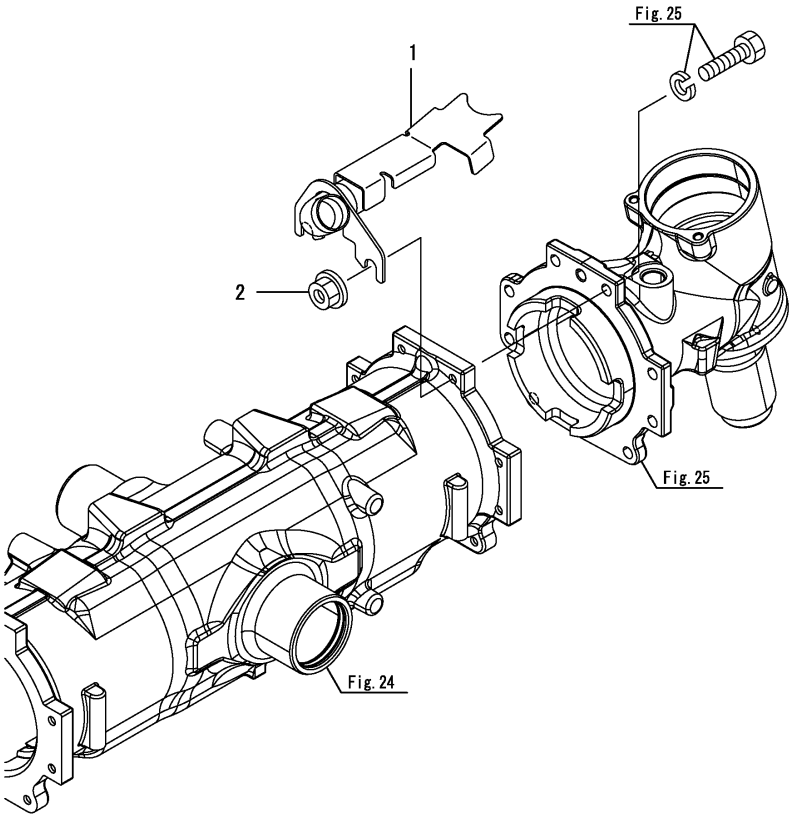

(A)=EG326Y (D)=EG334Y
(B)=EG328Y (E)=
(C)=EG330Y (F)=

No.	Lev.	Parts No.	Description	Q'ty (A)	(B)	(C)	(D)	(E)	(F)	I	R
1	1	1A7140-13670	COVER, HARNESS	1	1	1	1				
2	1	26366-100002	NUT, M10	2	2	2	2				

N:Old $\xleftrightarrow[\text{No}]{\text{Yes}}$ New, Q:Old $\xleftrightarrow[\text{Yes}]{\text{No}}$ New, R:Old $\xleftrightarrow[\text{Yes}]{\text{Yes}}$ New, S:Old $\xleftrightarrow[\text{No}]{\text{No}}$ New, W:Add, Z:Discontinued, F:Interchangeable by set, K:Q'ty Change

Copyright (C) 2014 YANMAR CO., LTD. All RightsReserved.

Fig.129. RELAY(1)

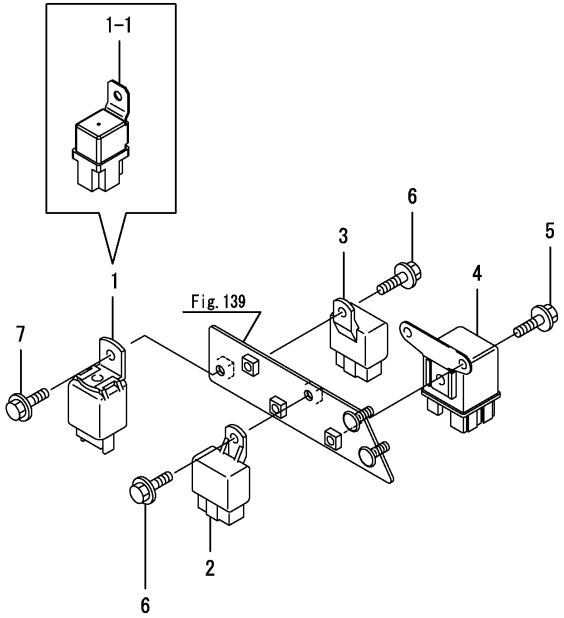

(A)=EG326Y (D)=EG334Y
(B)=EG328Y (E)=
(C)=EG330Y (F)=

No.	Lev.	Parts No.	Description	Q'ty (A)	(B)	(C)	(D)	(E)	(F)	I	R
1	1	198220-52180	RELAY, STARTER	1	1	1	1				
1-1	1	1A7870-52950	RELAY, CB	1	1	1	1			S	
	(A=F090706)	(B=F080594)	(C=F071251) (D=F061080)								
2	1	198461-52950	RELAY, CA TYPE C	1	1	1	1				
3	1	198461-52950	RELAY, CA TYPE C	1	1	1	1				
4	1	119650-77910	RELAY ASSY, GLOW	1	1	1	1				
5	1	26106-060122	BOLT, M6X 12 PLATED	2	2	2	2				
6	1	26106-060122	BOLT, M6X 12 PLATED	2	2	2	2				
7	1	26106-060122	BOLT, M6X 12 PLATED	1	1	1	1				

N:Old $\xleftarrow[\text{No}]{\text{Yes}}$ New, Q:Old $\xleftarrow[\text{Yes}]{\text{No}}$ New, R:Old $\xleftarrow[\text{Yes}]{\text{Yes}}$ New, S:Old $\xleftarrow[\text{No}]{\text{No}}$ New, W:Add, Z:Discontinued, F:Interchangeable by set, K:Q'ty Change

Copyright (C) 2014 YANMAR CO., LTD. All RightsReserved.

Fig.130. RELAY(2)

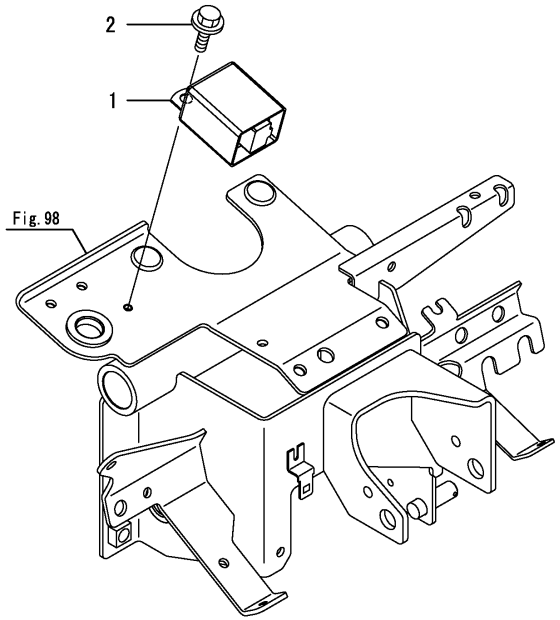

(A)=EG326Y (D)=EG334Y
(B)=EG328Y (E)=
(C)=EG330Y (F)=

No.	Lev.	Parts No.	Description	Q'ty (A)	(B)	(C)	(D)	(E)	(F)	I	R
1	1	1A7890-57200	LAMP ASSY, FLASHER	1	1	1	1				
2	1	26106-060122	BOLT, M6X 12 PLATED	1	1	1	1				

N:Old $\xleftrightarrow[\text{No}]{\text{Yes}}$ New, Q:Old $\xleftrightarrow[\text{Yes}]{\text{No}}$ New, R:Old $\xleftrightarrow[\text{Yes}]{\text{Yes}}$ New, S:Old $\xleftrightarrow[\text{No}]{\text{No}}$ New, W:Add, Z:Discontinued, F:Interchangeable by set, K:Q'ty Change

Copyright (C) 2014 YANMAR CO., LTD. All RightsReserved.

Fig.131. LAMP

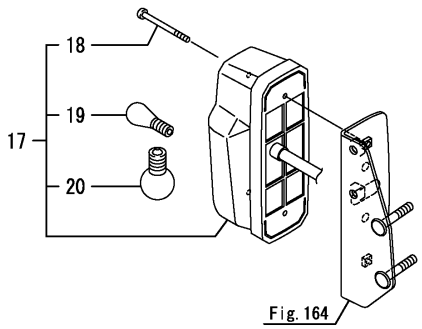

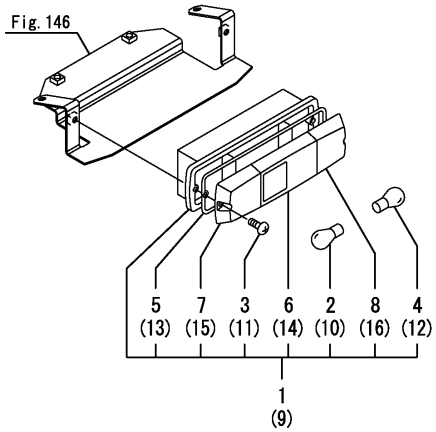

(A)=EG326Y (D)=EG334Y
(B)=EG328Y (E)=
(C)=EG330Y (F)=

No.	Lev.	Parts No.	Description	Q'ty (A)	(B)	(C)	(D)	(E)	(F)	I	R
1	1	1A7400-53110	LAMP ASSY, L	1	1	1	1				
2	2	1A7890-53420	BULB, 12V21W	1	1	1	1				
3	2	198268-53450	SCREW	2	2	2	2				
4	2	1A7400-53530	VALVE, 12V21/5W	1	1	1	1				
5	2	1A7400-53560	GASKET	1	1	1	1				
6	2	1A7400-53570	LENS, L	1	1	1	1				
7	2	1A7400-53590	LENS, L	1	1	1	1				
8	2	1A7400-53610	LENS, L	1	1	1	1				
9	1	1A7400-53120	LAMP ASSY, R	1	1	1	1				
10	2	1A7890-53420	BULB, 12V21W	1	1	1	1				
11	2	198268-53450	SCREW	2	2	2	2				
12	2	1A7400-53530	VALVE, 12V21/5W	1	1	1	1				
13	2	1A7400-53560	GASKET	1	1	1	1				
14	2	1A7400-53580	LENS, R	1	1	1	1				
15	2	1A7400-53600	LENS, R	1	1	1	1				
16	2	1A7400-53620	LENS, R	1	1	1	1				
17	1	1A8280-53400	LAMP, TURN SIGNAL	2	2	2	2				
18	2	1A8280-53320	SCREW, M5X60	4	4	4	4				
19	2	1A8100-53380	BULB, 12V5W	2	2	2	2				
20	2	1E9170-81270	VALVE, 12V 21W	2	2	2	2				

N:Old $\xleftrightarrow[\text{No}]{\text{Yes}}$ New, Q:Old $\xleftrightarrow[\text{Yes}]{\text{No}}$ New, R:Old $\xleftrightarrow[\text{Yes}]{\text{Yes}}$ New, S:Old $\xleftrightarrow[\text{No}]{\text{No}}$ New, W:Add, Z:Discontinued, F:Interchangeable by set, K:Q'ty Change

Copyright (C) 2014 YANMAR CO., LTD. All RightsReserved.

Fig.132. FRONT LAMP

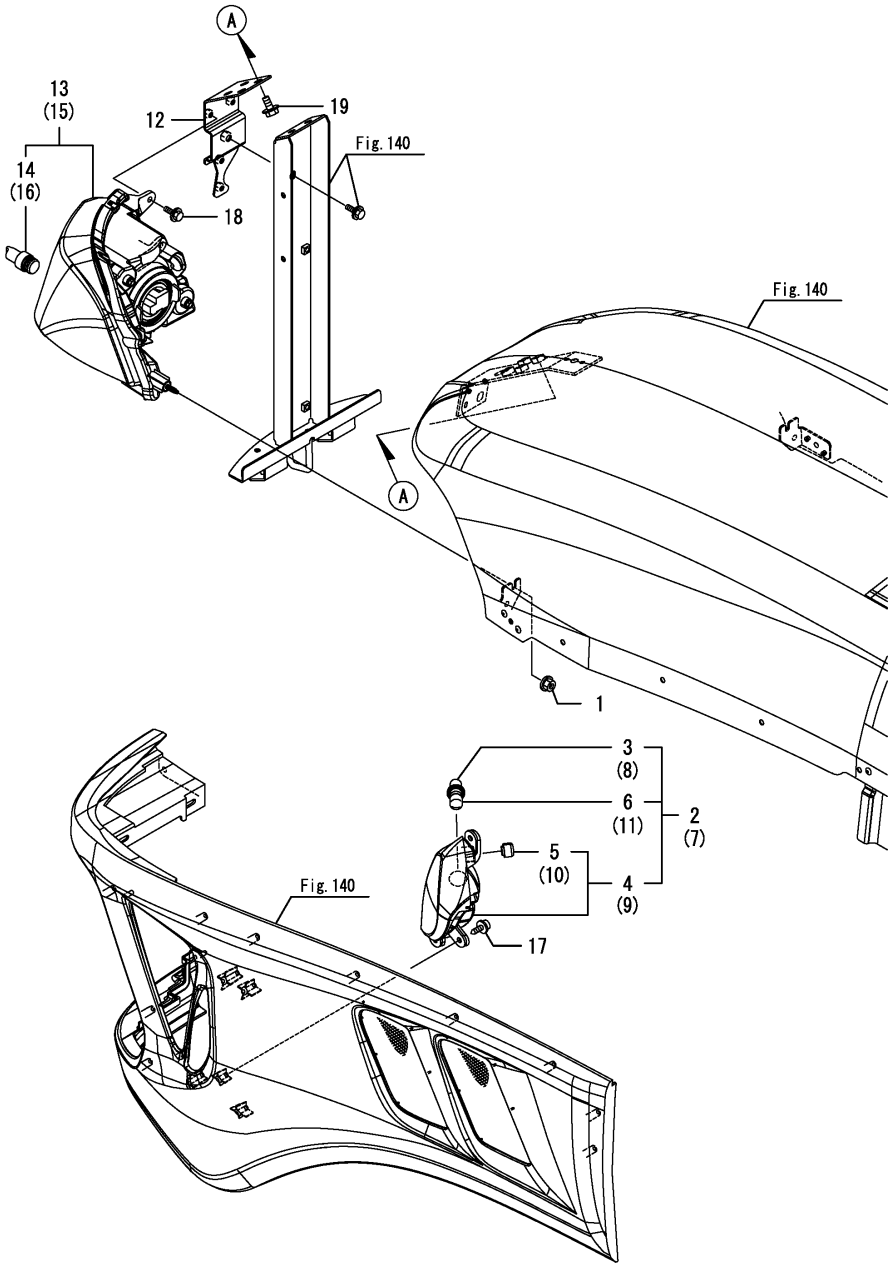

(A)=EG326Y (D)=EG334Y
(B)=EG328Y (E)=
(C)=EG330Y (F)=

No.	Lev.	Parts No.	Description	Q'ty (A)	(B)	(C)	(D)	(E)	(F)	I	R
1	1	194990-22130	NUT, M6	2	2	2	2				
2	1	1A8070-53010	LAMP ASSY, SIDE L	1	1	1	1				
3	2	1C6860-08160	SOCKET ASSY	1	1	1	1				
4	2	1A8070-53030	CASE ASSY, SIDE LAMP	1	1	1	1				
5	3	1A7260-53220	CAP	1	1	1	1				
6	2	198072-53450	BULB	1	1	1	1				
7	1	1A8070-53020	LAMP ASSY, SIDE R	1	1	1	1				
8	2	1C6860-08160	SOCKET ASSY	1	1	1	1				
9	2	1A8070-53040	CASE ASSY, SIDE LAMP	1	1	1	1				
10	3	1A7260-53220	CAP	1	1	1	1				
11	2	198072-53450	BULB	1	1	1	1				
12	1	1A7180-53050	STAY ASSY, LAMP	1	1	1	1				
13	1	1A8280-53200	LAMP ASSY, HEAD L	1	1	1	1				
14	2	1A8280-53220	BULB, 55W/60W	1	1	1	1				
15	1	1A8280-53300	LAMP ASSY, HEAD R	1	1	1	1				
16	2	1A8280-53220	BULB, 55W/60W	1	1	1	1				
17	1	1A7180-61780	SCREW, TAPPING M5X14	6	6	6	6				
18	1	26106-060202	BOLT, M6X 20 PLATED	4	4	4	4				
19	1	26106-080162	BOLT, M8X 16 PLATED	2	2	2	2				

N:Old $\xleftarrow[\text{No}]{\text{Yes}}$ New, Q:Old $\xleftarrow[\text{Yes}]{\text{No}}$ New, R:Old $\xleftarrow[\text{Yes}]{\text{Yes}}$ New, S:Old $\xleftarrow[\text{No}]{\text{No}}$ New, W:Add, Z:Discontinued, F:Interchangeable by set, K:Q'ty Change

Copyright (C) 2014 YANMAR CO., LTD. All RightsReserved.

Fig.133. BACK LAMP

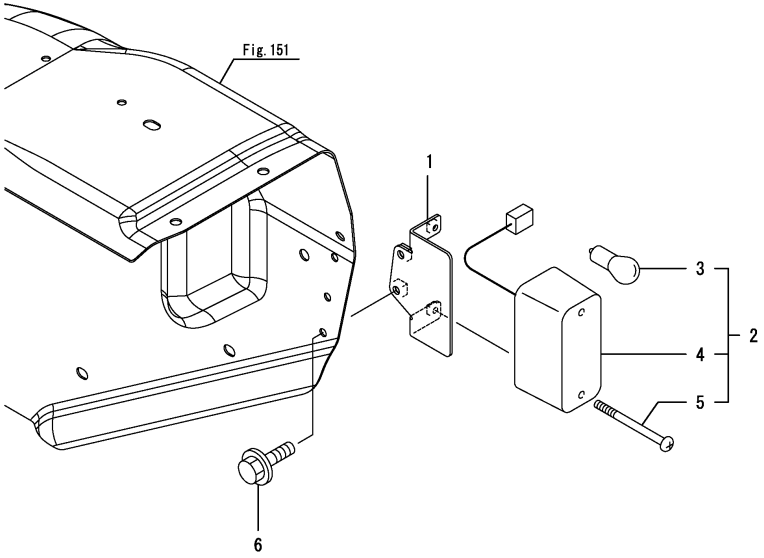

Remarks
* Applied to the following models.
(Rops & High Speed specification)
EG326, EG328, EG330, EG334
(Cabin specification)
EG326, EG328, EG330, EG330A, EG334, EG334A

(A)=EG326Y (D)=EG334Y
(B)=EG328Y (E)=
(C)=EG330Y (F)=

No.	Lev.	Parts No.	Description	Q'ty (A)	(B)	(C)	(D)	(E)	(F)	I	R
1	1	1A7180-53510	STAY, BACK LAMP	1	1	1	1				
2	1	1E9000-82000	LAMP, BACK	1	1	1	1				
3	2	1E6680-81130	BULB,12V-21W	1	1	1	1				
4	2	1E9000-82010	LENS	1	1	1	1				
5	2	1E9000-82020	SCREW	2	2	2	2				
6	1	26106-060122	BOLT, M6X 12 PLATED	2	2	2	2				

N:Old $\xleftrightarrow[\text{No}]{\text{Yes}}$ New, Q:Old $\xleftrightarrow[\text{Yes}]{\text{No}}$ New, R:Old $\xleftrightarrow[\text{Yes}]{\text{Yes}}$ New, S:Old $\xleftrightarrow[\text{No}]{\text{No}}$ New, W:Add, Z:Discontinued, F:Interchangeable by set, K:Q'ty Change

Copyright (C) 2014 YANMAR CO., LTD. All RightsReserved.

Fig.247. BACK LAMP(KW,KWA)(HIGH SPEED)

(A)=EG326Y
(B)=EG328Y
(C)=EG330Y
(D)=EG334Y
(E)=
(F)=

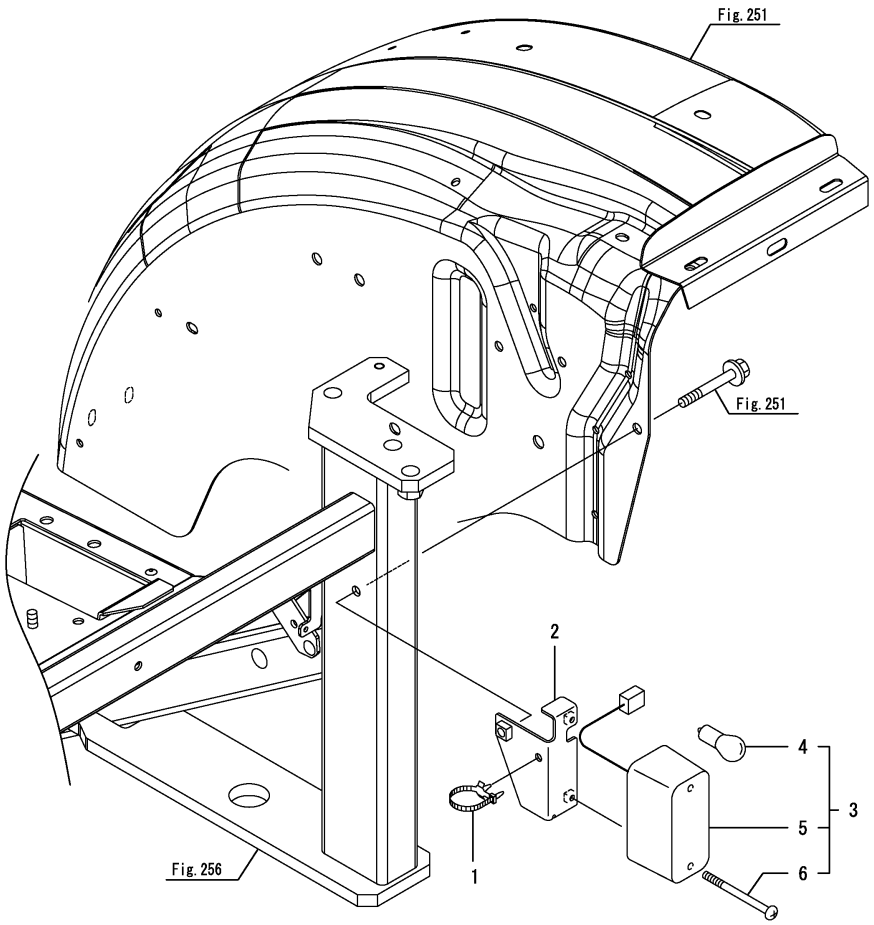

No.	Lev.	Parts No.	Description	Q'ty (A)	(B)	(C)	(D)	(E)	(F)	I	R
1	1	194680-51670	BAND, CLIP			1	1				
2	1	1A7160-53510	STAY, BACKUP LAMP			1	1				
3	1	1E9000-82000	LAMP, BACK			1	1				
4	2	1E6680-81130	BULB,12V-21W			1	1				
5	2	1E9000-82010	LENS			1	1				
6	2	1E9000-82020	SCREW			2	2				

Remarks
* Applied to the following models.
EG330KW, EG334KW, EG334KWA

N:Old $\xleftrightarrow[\text{No}]{\text{Yes}}$ New, Q:Old $\xleftrightarrow[\text{Yes}]{\text{No}}$ New, R:Old $\xleftrightarrow[\text{Yes}]{\text{Yes}}$ New, S:Old $\xleftrightarrow[\text{No}]{\text{No}}$ New, W:Add, Z:Discontinued, F:Interchangeable by set, K:Q'ty Change

Copyright (C) 2014 YANMAR CO., LTD. All RightsReserved.

Fig.134. METER

(A)=EG326Y (D)=EG334Y
(B)=EG328Y (E)=
(C)=EG330Y (F)=

No.	Lev.	Parts No.	Description	Q'ty (A)	(B)	(C)	(D)	(E)	(F)	I	R
1	1	1A8280-56011	METER ASSY	1	1	1	1				
1-1	1	1A8280-56012	METER ASSY,	1	1	1	1			N	
	(A=F090706)	(B=F080594)	(C=F071251) (D=F061080)								
2	2	198200-56060	GLASS	1	1	1	1				
3	2	198200-56080	SCREW, 3X16	9	9	9	9				
4	2	1A8280-56110	METER ASSY	1	1	1	1				
5	2	1A8280-56180	CASE, LOWER	1	1	1	1				
6	1	26557-050202	SCREW, M5X20	4	4	4	4				
7	1	26716-050002	NUT, M5	4	4	4	4				

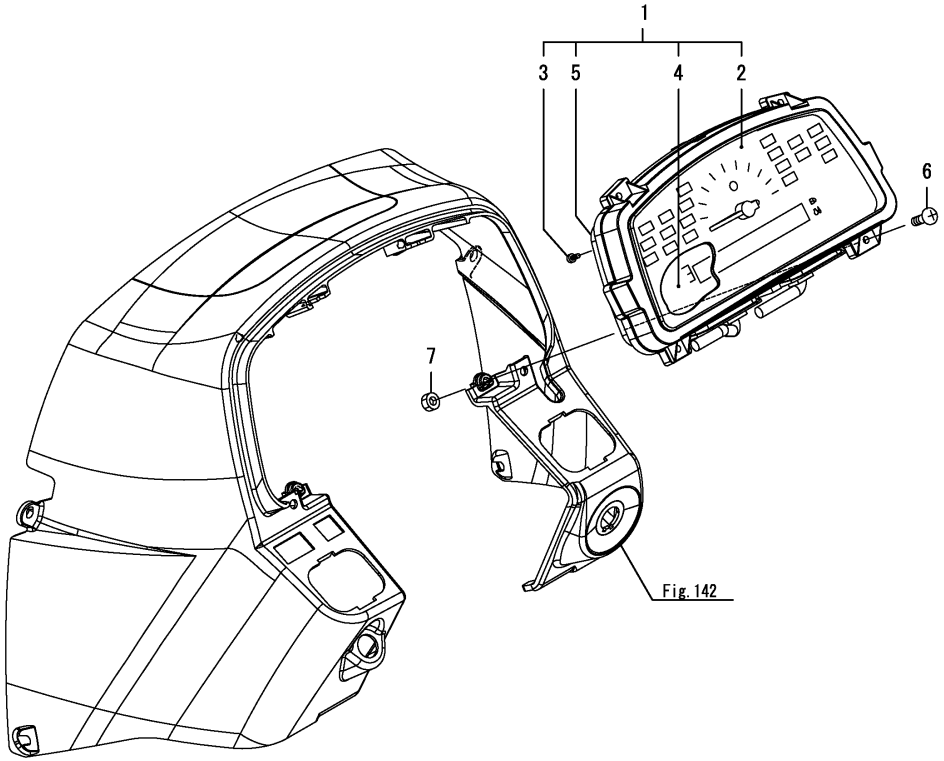

Copyright (C) 2014 YANMAR CO., LTD. All RightsReserved.

Fig.135. HORN

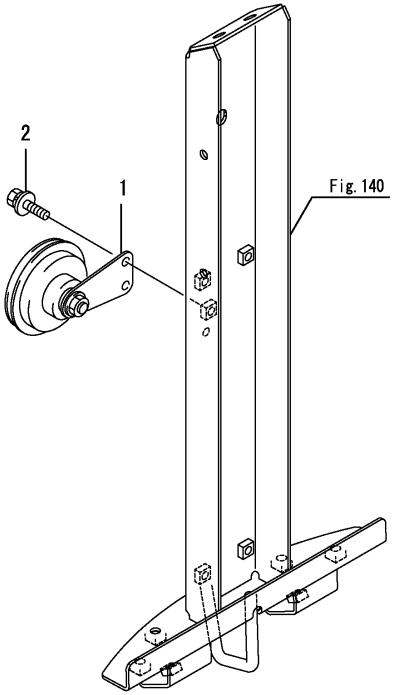

(A)=EG326Y (D)=EG334Y
(B)=EG328Y (E)=
(C)=EG330Y (F)=

No.	Lev.	Parts No.	Description	Q'ty (A)	(B)	(C)	(D)	(E)	(F)	I	R
1	1	1C7100-08150	HORN ASSY	1	1	1	1				
1-1	1	1C7100-08151	HORN ASSY	1	1	1	1			N	
	(A=F090556)	(B=F080466)	(C=F071217) (D=F061127)								
2	1	198072-60590	BOLT, M6X20	1	1	1	1				

N:Old $\xleftrightarrow[\text{No}]{\text{Yes}}$ New, Q:Old $\xleftrightarrow[\text{Yes}]{\text{No}}$ New, R:Old $\xleftrightarrow[\text{Yes}]{\text{Yes}}$ New, S:Old $\xleftrightarrow[\text{No}]{\text{No}}$ New, W:Add, Z:Discontinued, F:Interchangeable by set, K:Q'ty Change

Copyright (C) 2014 YANMAR CO., LTD. All RightsReserved.

Fig.136. BACK BUZZER

(A)=EG326Y
(B)=EG328Y
(C)=EG330Y
(D)=EG334Y
(E)=
(F)=

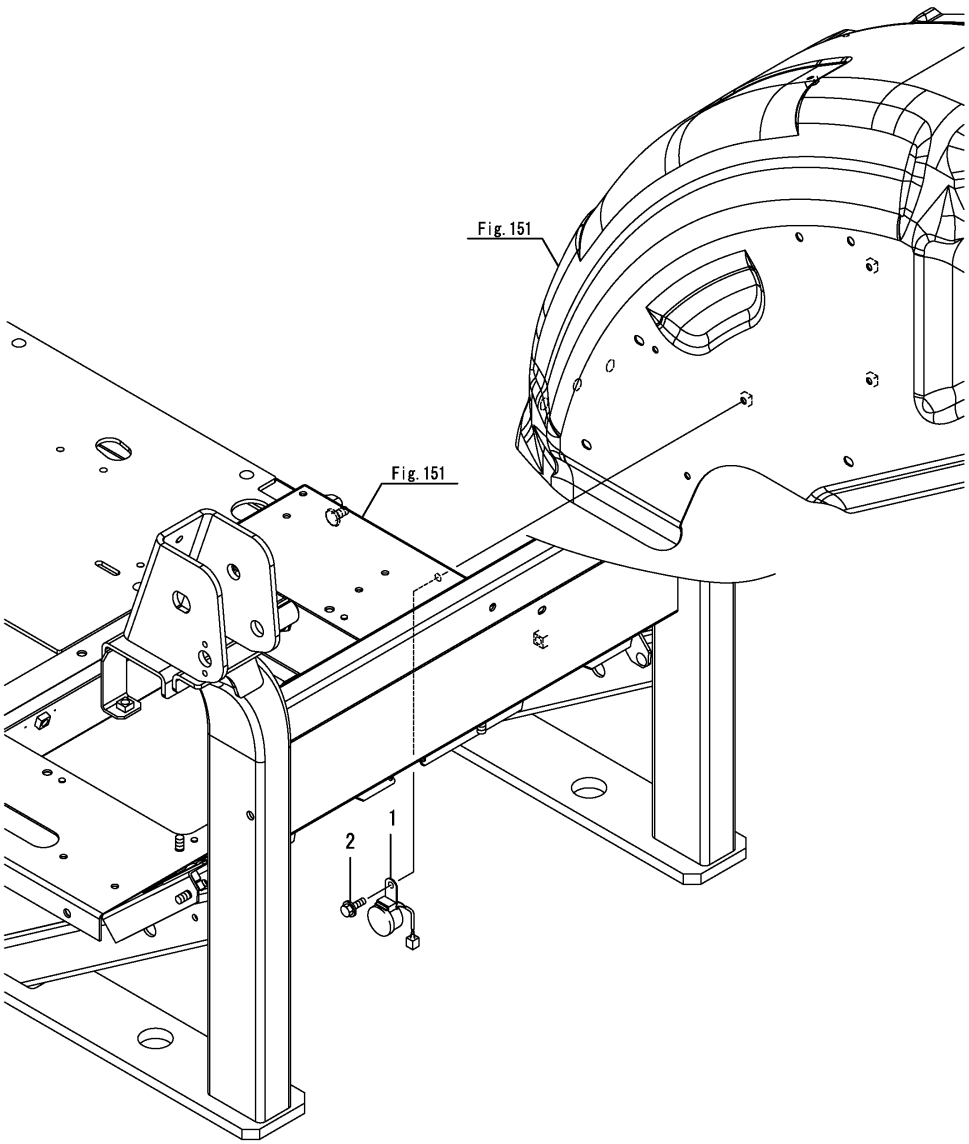

No.	Lev.	Parts No.	Description	Q'ty (A)	(B)	(C)	(D)	(E)	(F)	I	R
1	1	174570-57110	BUZZER, ALARM	1	1	1	1				
2	1	26106-060122	BOLT, M6X 12 PLATED	1	1	1	1				

N:Old $\xleftarrow[\text{No}]{\text{Yes}}$ New, Q:Old $\xleftarrow[\text{Yes}]{\text{No}}$ New, R:Old $\xleftarrow[\text{Yes}]{\text{Yes}}$ New, S:Old $\xleftarrow[\text{No}]{\text{No}}$ New, W:Add, Z:Discontinued, F:Interchangeable by set, K:Q'ty Change

Copyright (C) 2014 YANMAR CO., LTD. All RightsReserved.

Fig.137. FRONT FRAME

(A)=EG326Y
(B)=EG328Y
(C)=EG330Y
(D)=EG334Y
(E)=
(F)=

No.	Lev.	Parts No.	Description	Q'ty (A)	(B)	(C)	(D)	(E)	(F)	I	R
1	1	194990-22140	NUT, M8	2	2	2	2				
2	1	1A7140-60100	FRAME ASSY, FRONT	1	1	1	1				
3	1	1A7180-60290	FRAME ASSY, CONNECT	1	1	1	1				
4	1	26106-080162	BOLT, M8X 16 PLATED	2	2	2	2				
5	1	26106-080162	BOLT, M8X 16 PLATED	2	2	2	2				

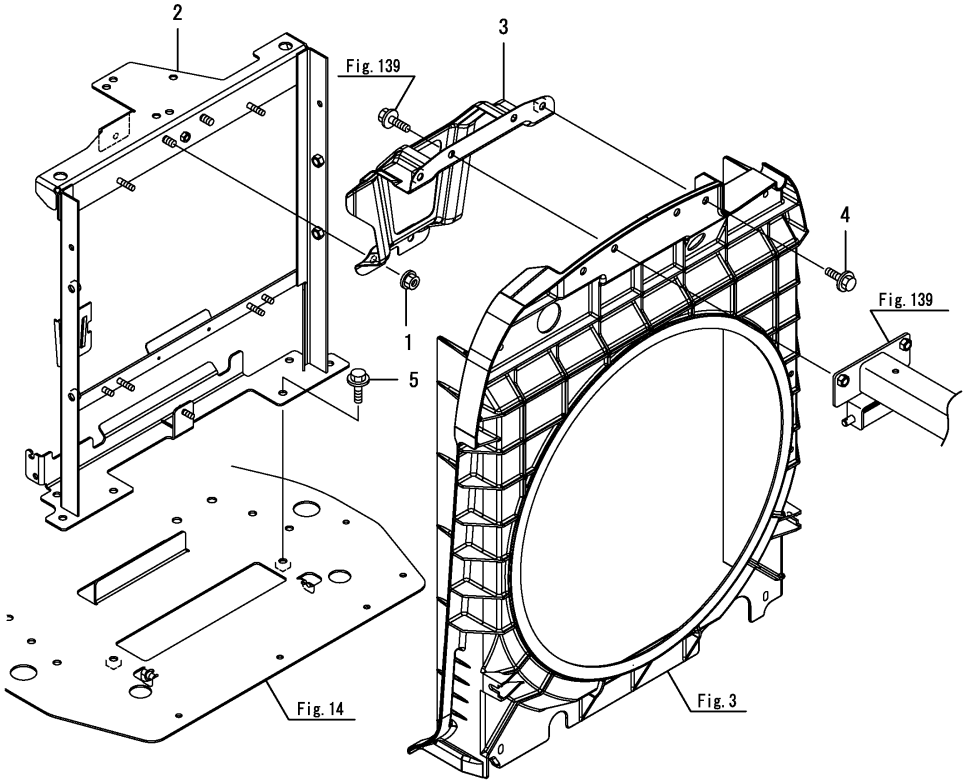

N:Old $\xleftarrow[\text{No}]{\text{Yes}}$ New, Q:Old $\xleftarrow[\text{Yes}]{\text{No}}$ New, R:Old $\xleftarrow[\text{Yes}]{\text{Yes}}$ New, S:Old $\xleftarrow[\text{No}]{\text{No}}$ New, W:Add, Z:Discontinued, F:Interchangeable by set, K:Q'ty Change

Copyright (C) 2014 YANMAR CO., LTD. All RightsReserved.

Fig.138. FRONT FRAME(CABIN)

(A)=EG326Y
(B)=EG328Y
(C)=EG330Y
(D)=EG334Y
(E)=
(F)=

No.	Lev.	Parts No.	Description	Q'ty (A)	(B)	(C)	(D)	(E)	(F)	I	R
1	1	194990-22140	NUT, M8	2	2	2	2				
2	1	1A7210-60102	FRAME ASSY, FRONT	1	1	1	1				
3	1	1A7180-60290	FRAME ASSY, CONNECT	1	1	1	1				
4	1	26106-080162	BOLT, M8X 16 PLATED	2	2	2	2				
5	1	26106-080162	BOLT, M8X 16 PLATED	2	2	2	2				

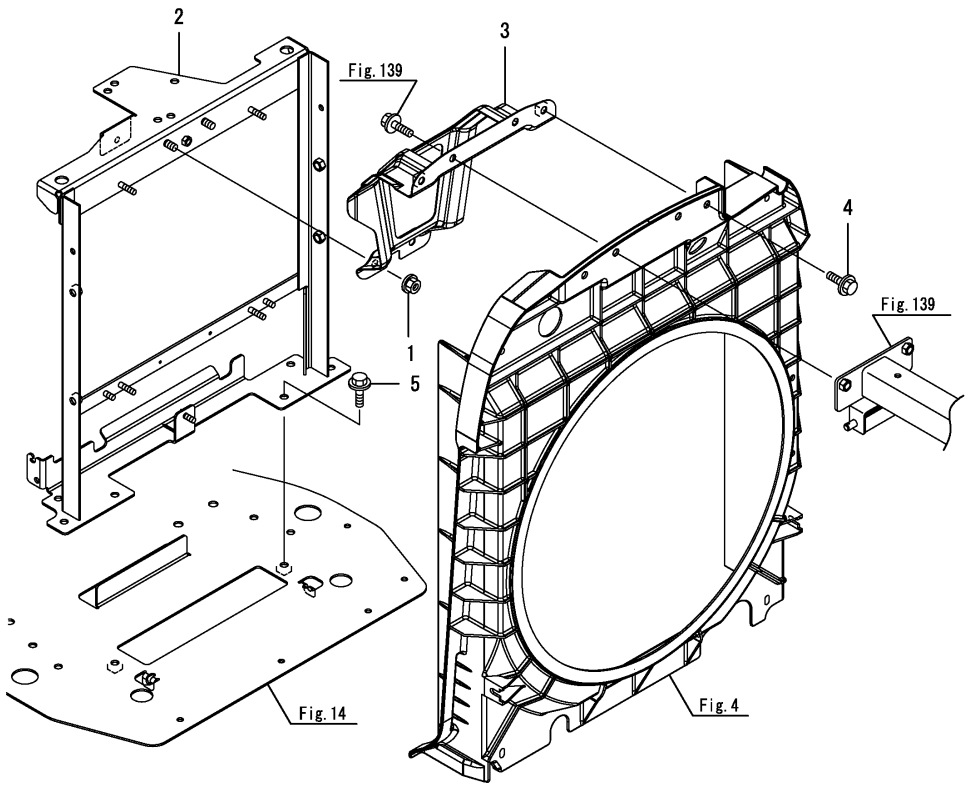

N:Old ⇄(Yes/No) New, Q:Old ⇄(No/Yes) New, R:Old ⇄(Yes/Yes) New, S:Old ⇄(No/No) New, W:Add, Z:Discontinued, F:Interchangeable by set, K:Q'ty Change

Copyright (C) 2014 YANMAR CO., LTD. All RightsReserved.

Fig.139. BONNET FRAME

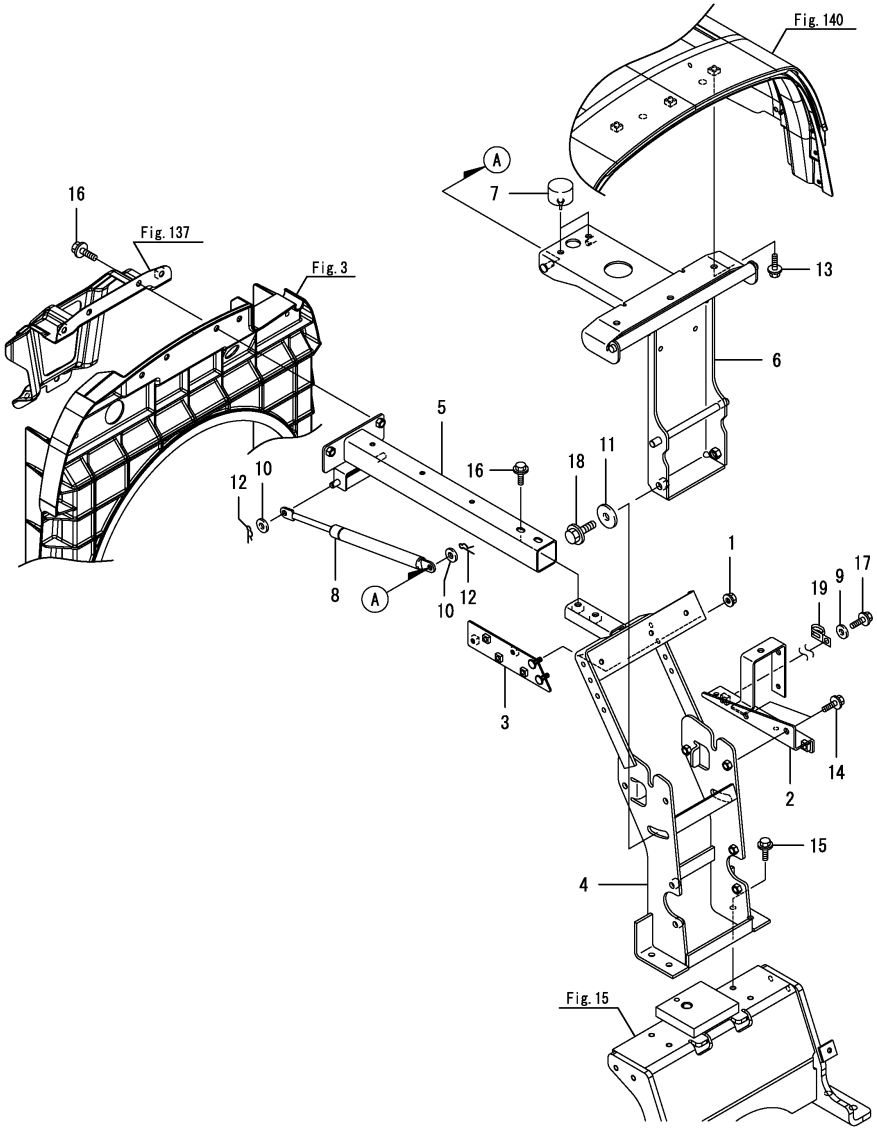

(A)=EG326Y (D)=EG334Y
(B)=EG328Y (E)=
(C)=EG330Y (F)=

No.	Lev.	Parts No.	Description	Q'ty (A)	(B)	(C)	(D)	(E)	(F)	I	R
1	1	194990-22130	NUT, M6	2	2	2	2				
2	1	1A7180-60350	BRACKET ASSY	1	1	1	1				
3	1	1A7180-60371	BRACKET ASSY, RELAY	1	1	1	1				
4	1	1A7140-60450	FRAME ASSY, BONNET	1	1	1	1				
4-1	1	1A7140-60451	FRAME ASSY, BONNET	1	1	1	1			N	
	(A=F090103)	(B=F080104)	(C=F070104) (D=F060104)								
4-2	1	1A7140-60452	FRAME ASSY, HOOD	1	1	1	1			N	
	(A=F090350)	(B=F080306)	(C=F070761) (D=F060683)								
5	1	1A7140-60800	FRAME ASSY, CONNECT	1	1	1	1				
6	1	1A7180-60901	HINGE ASSY, BONNET	1	1	1	1				
7	1	1A7890-60980	RUBBER, CUSHION	2	2	2	2				
8	1	1A7180-61400	SPRING, GAS 400	2	2	2	2				
9	1	129927-77690	WASHER	2	2	2	2				
10	1	22137-080000	WASHER, 8	4	4	4	4				
11	1	22157-100000	WASHER, 10	1	1	1	1				
12	1	22372-080000	PIN, SNAP 8	4	4	4	4				
13	1	26106-080122	BOLT, M8X 12 PLATED	3	3	3	3				
14	1	26106-080162	BOLT, M8X 16 PLATED	2	2	2	2				
15	1	26106-080162	BOLT, M8X 16 PLATED	4	4	4	4				
16	1	26106-080162	BOLT, M8X 16 PLATED	4	4	4	4				
17	1	26106-080252	BOLT, M8X 25 PLATED	2	2	2	2				
18	1	26106-100302	BOLT, M10X 30 PLATED	1	1	1	1				
19	1	1E6102-83230	CLAMP, CABLE	1	1	1	1			W	
	(A=F090101)	(B=F080101)	(C=F070101) (D=F060101)								

Remarks
* Applied to the following models.
EG326, EG328, EG330, EG334
EG330A(Cabin specification), EG334A(Cabin specification)

N:Old $\frac{\text{Yes}}{\text{No}}$ New, Q:Old $\frac{\text{No}}{\text{Yes}}$ New, R:Old $\frac{\text{Yes}}{\text{Yes}}$ New, S:Old $\frac{\text{No}}{\text{No}}$ New, W:Add, Z:Discontinued, F:Interchangeable by set, K:Q'ty Change

Copyright (C) 2014 YANMAR CO., LTD. All RightsReserved.

Fig.248. BONNET FRAME(A,K,KW,KWA)

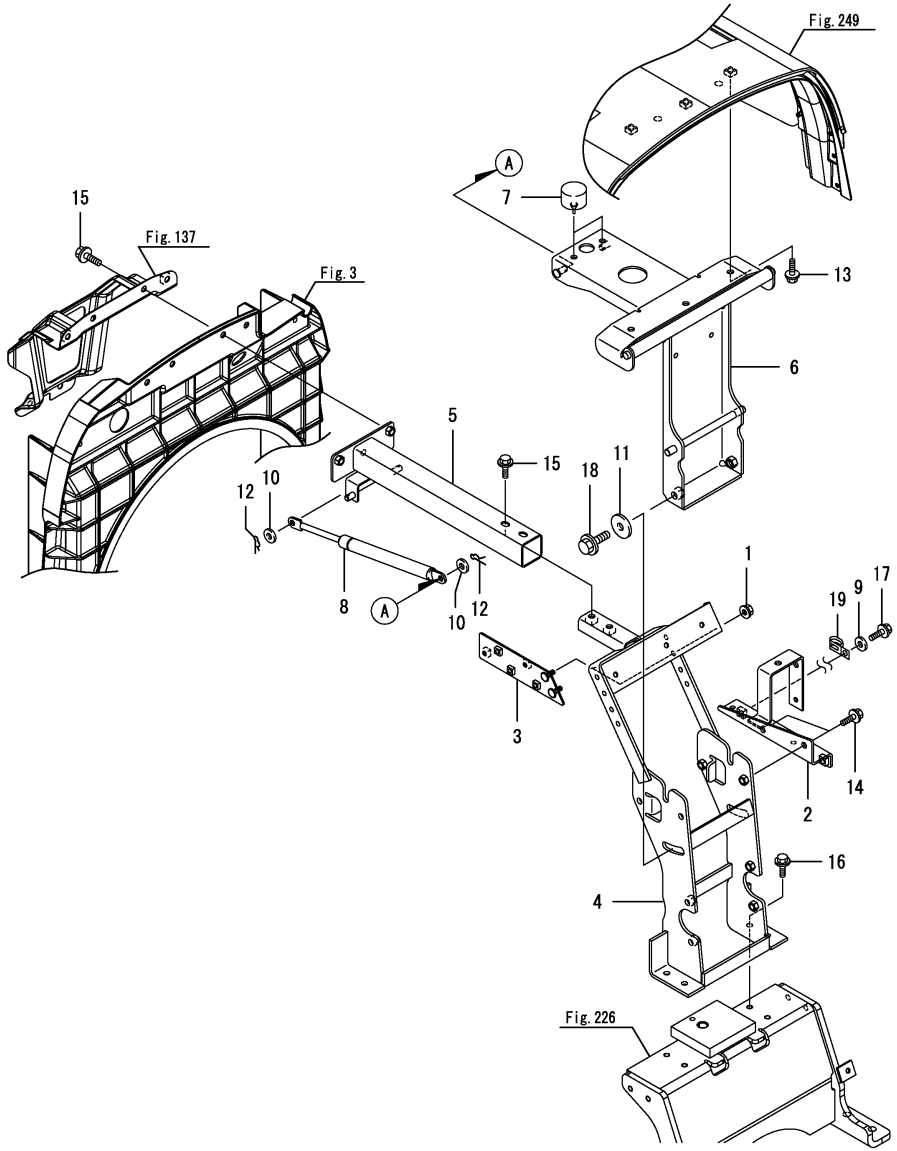

(A)=EG326Y (D)=EG334Y
(B)=EG328Y (E)=
(C)=EG330Y (F)=

No.	Lev.	Parts No.	Description	Q'ty (A)	(B)	(C)	(D)	(E)	(F)	I	R
1	1	194990-22130	NUT, M6			2	2				
2	1	1A7180-60350	BRACKET ASSY			1	1				
3	1	1A7180-60371	BRACKET ASSY, RELAY			1	1				
4	1	1A7140-60451	FRAME ASSY, BONNET			1	1				
4-1	1	1A7140-60452	FRAME ASSY, HOOD (C=F070761) (D=F060683)			1	1			N	
5	1	1A7160-60800	FRAME ASSY,CONECTING			1	1				
6	1	1A7180-60901	HINGE ASSY, BONNET			1	1				
7	1	1A7890-60980	RUBBER, CUSHION			2	2				
8	1	1A7160-61400	SPRING, GAS 300			2	2				
9	1	129927-77690	WASHER			2	2				
10	1	22137-080000	WASHER, 8			4	4				
11	1	22157-100000	WASHER, 10			1	1				
12	1	22372-080000	PIN, SNAP 8			4	4				
13	1	26106-080122	BOLT, M8X 12 PLATED			3	3				
14	1	26106-080162	BOLT, M8X 16 PLATED			2	2				
15	1	26106-080162	BOLT, M8X 16 PLATED			4	4				
16	1	26106-080162	BOLT, M8X 16 PLATED			4	4				
17	1	26106-080252	BOLT, M8X 25 PLATED			2	2				
18	1	26106-100302	BOLT, M10X 30 PLATED			1	1				
19	1	1E6102-83230	CLAMP, CABLE (C=F070101) (D=F060101)			1	1			W	

Remarks
* Applied to the following models.
EG330A(Rops specification), EG330K, EG330KW, EG334A(Rops specification), EG334KW, EG334KWA

N:Old $\frac{\text{Yes}}{\text{No}}$ New, Q:Old $\frac{\text{No}}{\text{Yes}}$ New, R:Old $\frac{\text{Yes}}{\text{Yes}}$ New, S:Old $\frac{\text{No}}{\text{No}}$ New, W:Add, Z:Discontinued, F:Interchangeable by set, K:Q'ty Change

Copyright (C) 2014 YANMAR CO., LTD. All RightsReserved.

Fig.140. BONNET

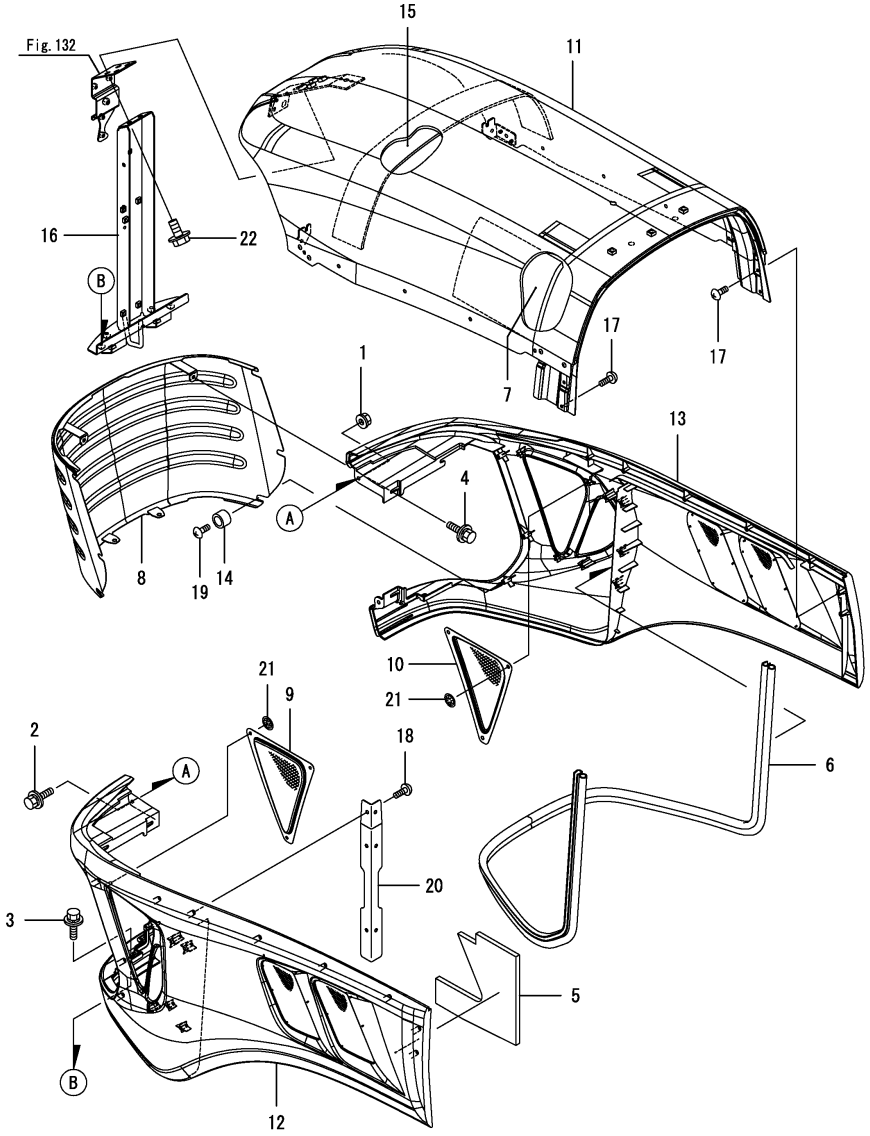

(A)=EG326Y (D)=EG334Y
(B)=EG328Y (E)=
(C)=EG330Y (F)=

No.	Lev.	Parts No.	Description	Q'ty (A)	(B)	(C)	(D)	(E)	(F)	I	R
1	1	194990-22130	NUT, M6	2	2	2	2				
2	1	198072-60590	BOLT, M6X20	2	2	2	2				
3	1	198072-60590	BOLT, M6X20	6	6	6	6				
4	1	198072-60590	BOLT, M6X20	4	4	4	4				
5	1	1A7180-60601	INSULATOR, BONNET	1	1	1	1				
6	1	1A7180-60750	WEATHER-STRIP	1	1	1	1				
7	1	1A7260-60890	URETHANE, BONNET UL	1	1	1	1				
8	1	1A7180-61050	NET ASSY, BONNET	1	1	1	1				
9	1	1A7180-61070	NET, GRILLE L	1	1	1	1				
10	1	1A7180-61080	NET, GRILLE R	1	1	1	1				
11	1	1A7140-61100	BONNET ASSY, UPPER	1	1	1	1				
12	1	1A7140-61130	BONNET ASSY, LOWER L	1	1	1	1				
13	1	1A7140-61140	BONNET ASSY, LOWER R	1	1	1	1				
14	1	1A8070-61330	COLLAR, 10X15X10	6	6	6	6				
15	1	1A7180-61410	URETHANE, BONNET U	1	1	1	1				
16	1	1A7180-61550	STAY ASSY, LOCK	1	1	1	1				
17	1	1A7180-61780	SCREW, TAPPING M5X14	12	12	12	12				
18	1	1A7180-61780	SCREW, TAPPING M5X14	6	6	6	6				
19	1	1A7180-61780	SCREW, TAPPING M5X14	6	6	6	6				
20	1	1A7180-61810	STAY, BONNET SIDE	2	2	2	2				
21	1	198071-65610	NUT, SPEED M5	6	6	6	6				
22	1	26106-080162	BOLT, M8X 16 PLATED	3	3	3	3				

Remarks
* Applied to the following models.
EG326, EG328, EG330, EG334
EG330A(Cabin specification), EG334A(Cabin specification)

N:Old $\xleftarrow[\text{No}]{\text{Yes}}$ New, Q:Old $\xleftarrow[\text{Yes}]{\text{No}}$ New, R:Old $\xleftarrow[\text{Yes}]{\text{Yes}}$ New, S:Old $\xleftarrow[\text{No}]{\text{No}}$ New, W:Add, Z:Discontinued, F:Interchangeable by set, K:Q'ty Change

Copyright (C) 2014 YANMAR CO., LTD. All RightsReserved.

Fig.249. BONNET(A,K,KW,KWA)

(A)=EG326Y
(B)=EG328Y
(C)=EG330Y
(D)=EG334Y
(E)=
(F)=

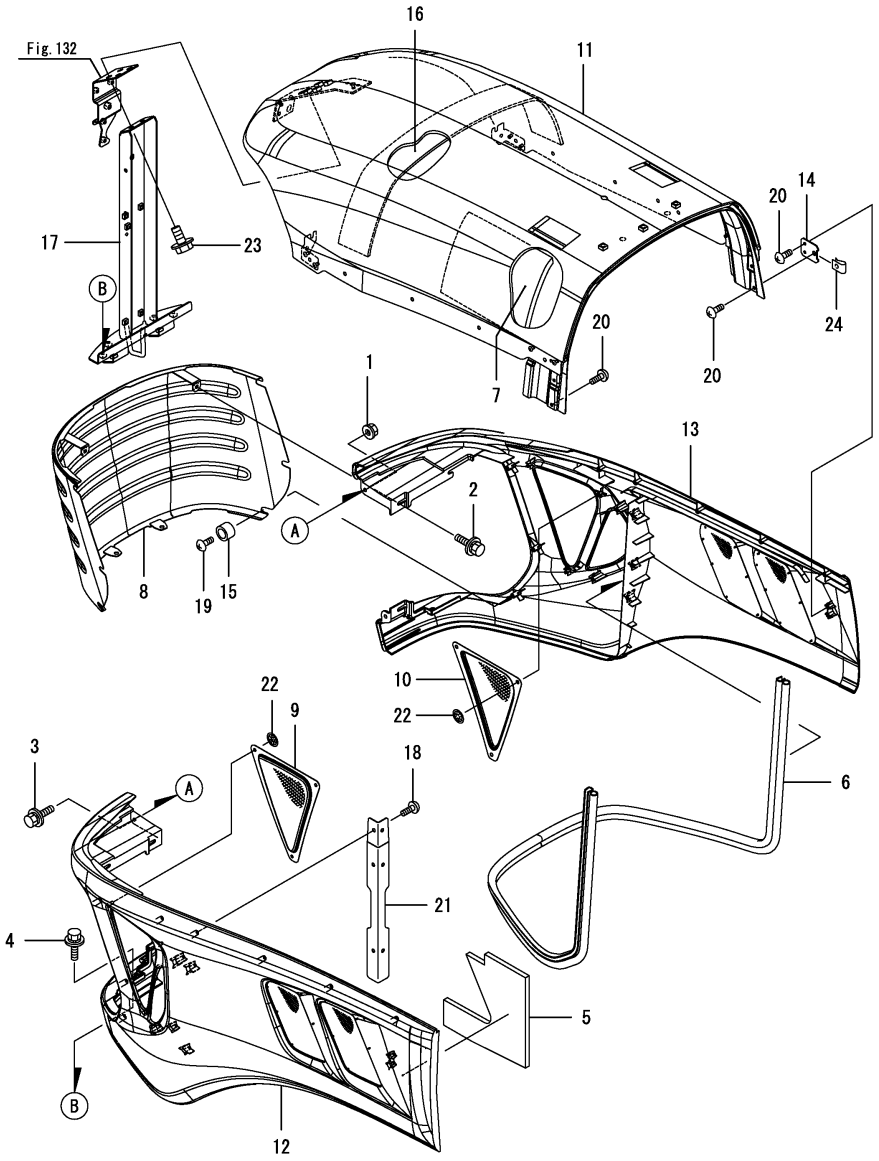

No.	Lev.	Parts No.	Description	Q'ty (A)	(B)	(C)	(D)	(E)	(F)	I	R
1	1	194990-22130	NUT, M6			2	2				
2	1	198072-60590	BOLT, M6X20			4	4				
3	1	198072-60590	BOLT, M6X20			2	2				
4	1	198072-60590	BOLT, M6X20			6	6				
5	1	1A7180-60601	INSULATOR, BONNET			1	1				
6	1	1A7180-60750	WEATHER-STRIP			1	1				
7	1	1A7260-60890	URETHANE, BONNET UL			1	1				
8	1	1A7180-61050	NET ASSY, BONNET			1	1				
9	1	1A7180-61070	NET, GRILLE L			1	1				
10	1	1A7180-61080	NET, GRILLE R			1	1				
11	1	1A7160-61100	UPPER ASSY, HOOD			1	1				
12	1	1A7160-61130	HOOD ASSY, LOWER L			1	1				
13	1	1A7160-61140	HOOD ASSY, LOWER R			1	1				
14	1	1A7160-61210	STAY, HOOD LOWER			2	2				
15	1	1A8070-61330	COLLAR, 10X15X10			6	6				
16	1	1A7180-61410	URETHANE, BONNET U			1	1				
17	1	1A7180-61550	STAY ASSY, LOCK			1	1				
18	1	1A7180-61780	SCREW, TAPPING M5X14			6	6				
19	1	1A7180-61780	SCREW, TAPPING M5X14			6	6				
20	1	1A7180-61780	SCREW, TAPPING M5X14			12	12				
21	1	1A7180-61810	STAY, BONNET SIDE			2	2				
22	1	198071-65610	NUT, SPEED M5			6	6				
23	1	26106-080162	BOLT, M8X 16 PLATED			3	3				
24	1	194167-61650	NUT, SPEED			2	2				

Remarks
* Applied to the following models.
EG330A(Rops specification), EG330K, EG330KW, EG334A(Rops specification), EG334KW, EG334KWA

N:Old $\frac{\text{Yes}}{\text{No}}$ New, Q:Old $\frac{\text{No}}{\text{Yes}}$ New, R:Old $\frac{\text{Yes}}{\text{Yes}}$ New, S:Old $\frac{\text{No}}{\text{No}}$ New, W:Add, Z:Discontinued, F:Interchangeable by set, K:Q'ty Change

Copyright (C) 2014 YANMAR CO., LTD. All RightsReserved.

Fig.141. SIDE COVER

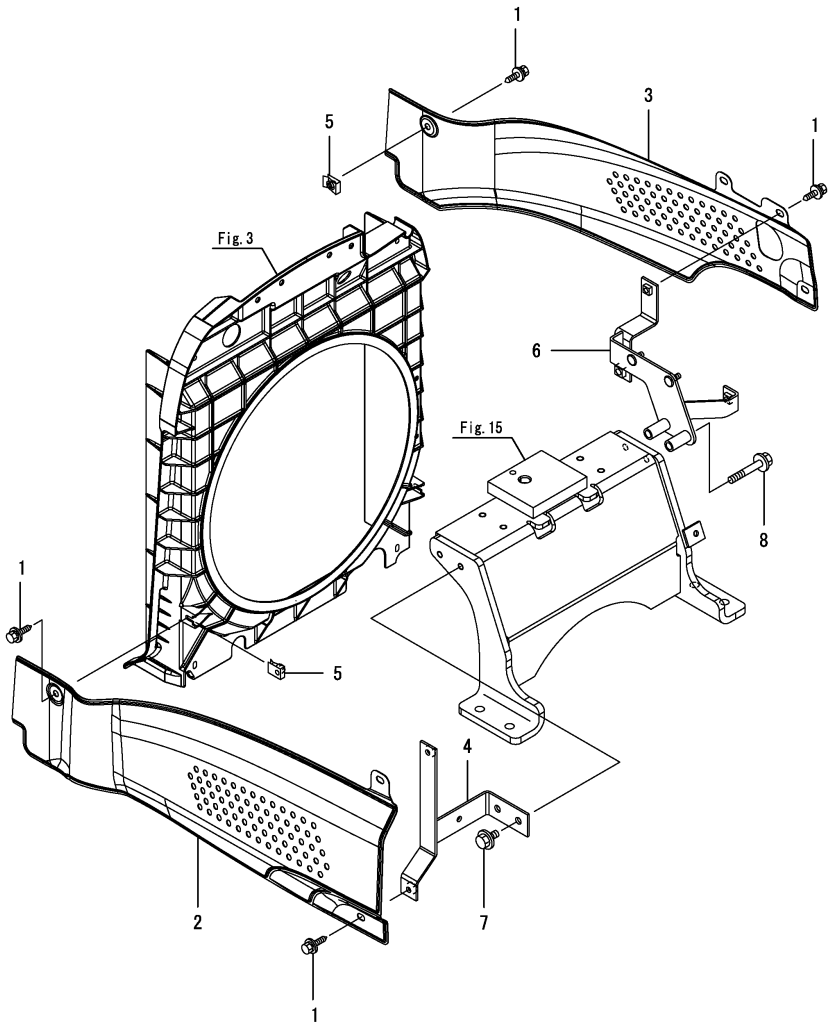

(A)=EG326Y (D)=EG334Y
(B)=EG328Y (E)=
(C)=EG330Y (F)=

No.	Lev.	Parts No.	Description	Q'ty (A)	(B)	(C)	(D)	(E)	(F)	I	R
1	1	198072-60590	BOLT, M6X20	6	6	6	6				
1-1	1	1A7450-03170	BOLT, M6X10	6	6	6	6			N	
	(A=F090103)	(B=F080104)	(C=F070104) (D=F060104)								
2	1	1A7140-61430	COVER ASSY, SIDE L M	1	1	1	1				
3	1	1A7140-61450	COVER ASSY, SIDE R M	1	1	1	1				
4	1	1A7180-61850	STAY ASSY, COVER L	1	1	1	1				
5	1	198071-61890	NUT, SPEED M6	2	2	2	2				
6	1	1A7180-61941	STAY ASSY, COVER R	1	1	1	1				
7	1	26106-080162	BOLT, M8X 16 PLATED	2	2	2	2				
8	1	26106-080502	BOLT, M8X 50 PLATED	2	2	2	2				
8-1	1	26106-080552	BOLT, M8X 55 PLATED	2	2	2	2			N	
	(A=F090102)	(B=F080101)	(C=F070102) (D=F060101)								

Remarks
* Applied to the following models.
EG326, EG328, EG330, EG334
EG330A(Cabin specification), EG334A(Cabin specification)

N:Old $\xleftarrow[\text{No}]{\text{Yes}}$ New, Q:Old $\xleftarrow[\text{Yes}]{\text{No}}$ New, R:Old $\xleftarrow[\text{Yes}]{\text{Yes}}$ New, S:Old $\xleftarrow[\text{No}]{\text{No}}$ New, W:Add, Z:Discontinued, F:Interchangeable by set, K:Q'ty Change

Copyright (C) 2014 YANMAR CO., LTD. All RightsReserved.

Fig.250. SIDE COVER(A,K,KW,KWA)

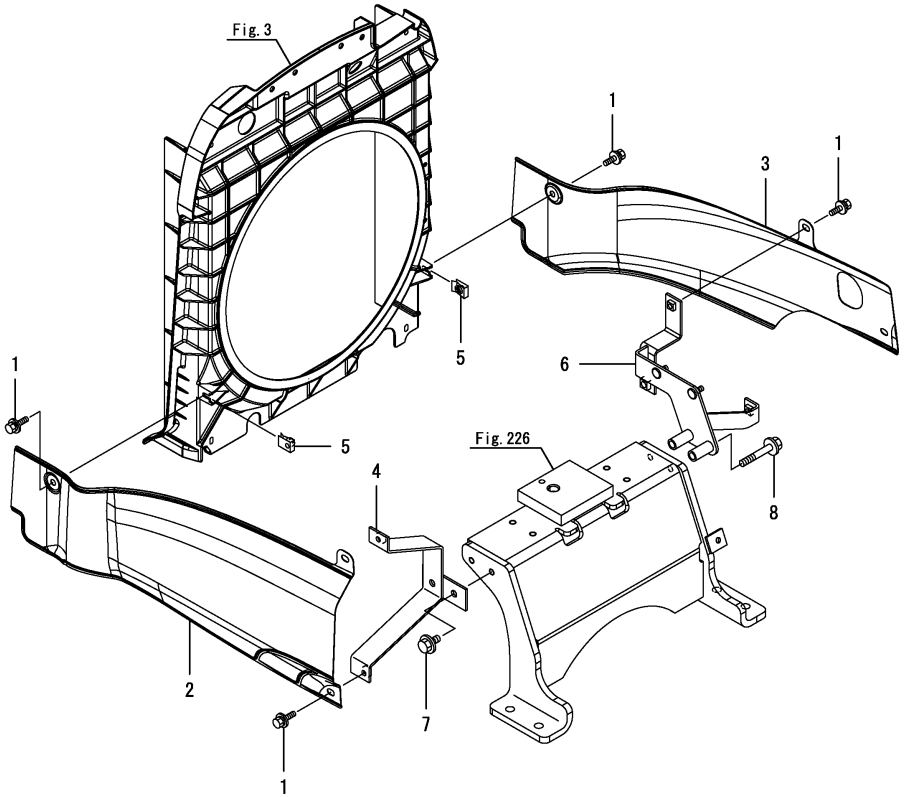

(A)=EG326Y (D)=EG334Y
(B)=EG328Y (E)=
(C)=EG330Y (F)=

No.	Lev.	Parts No.	Description	Q'ty (A)	(B)	(C)	(D)	(E)	(F)	I	R
1	1	1A7450-03170	BOLT, M6X10			6	6				
2	1	1A7160-61430	COVER M ASSY, SIDE L			1	1				
3	1	1A7160-61450	COVER M ASSY, SIDE R			1	1				
4	1	1A7160-61850	STAY ASSY, L COVER			1	1				
5	1	198071-61890	NUT, SPEED M6			2	2				
6	1	1A7180-61941	STAY ASSY, COVER R			1	1				
7	1	26106-080162	BOLT, M8X 16 PLATED			2	2				
8	1	26106-080552	BOLT, M8X 55 PLATED			2	2				

Remarks
* Applied to the following models.
EG330A(Rops specification), EG330K, EG330KW, EG334A(Rops specification), EG334KW, EG334KWA

N:Old $\frac{\text{Yes}}{\text{No}}$ New, Q:Old $\frac{\text{No}}{\text{Yes}}$ New, R:Old $\frac{\text{Yes}}{\text{Yes}}$ New, S:Old $\frac{\text{No}}{\text{No}}$ New, W:Add, Z:Discontinued, F:Interchangeable by set, K:Q'ty Change

Copyright (C) 2014 YANMAR CO., LTD. All RightsReserved.

Fig.142. DASHBOARD

(A)=EG326Y
(B)=EG328Y
(C)=EG330Y
(D)=EG334Y
(E)=
(F)=

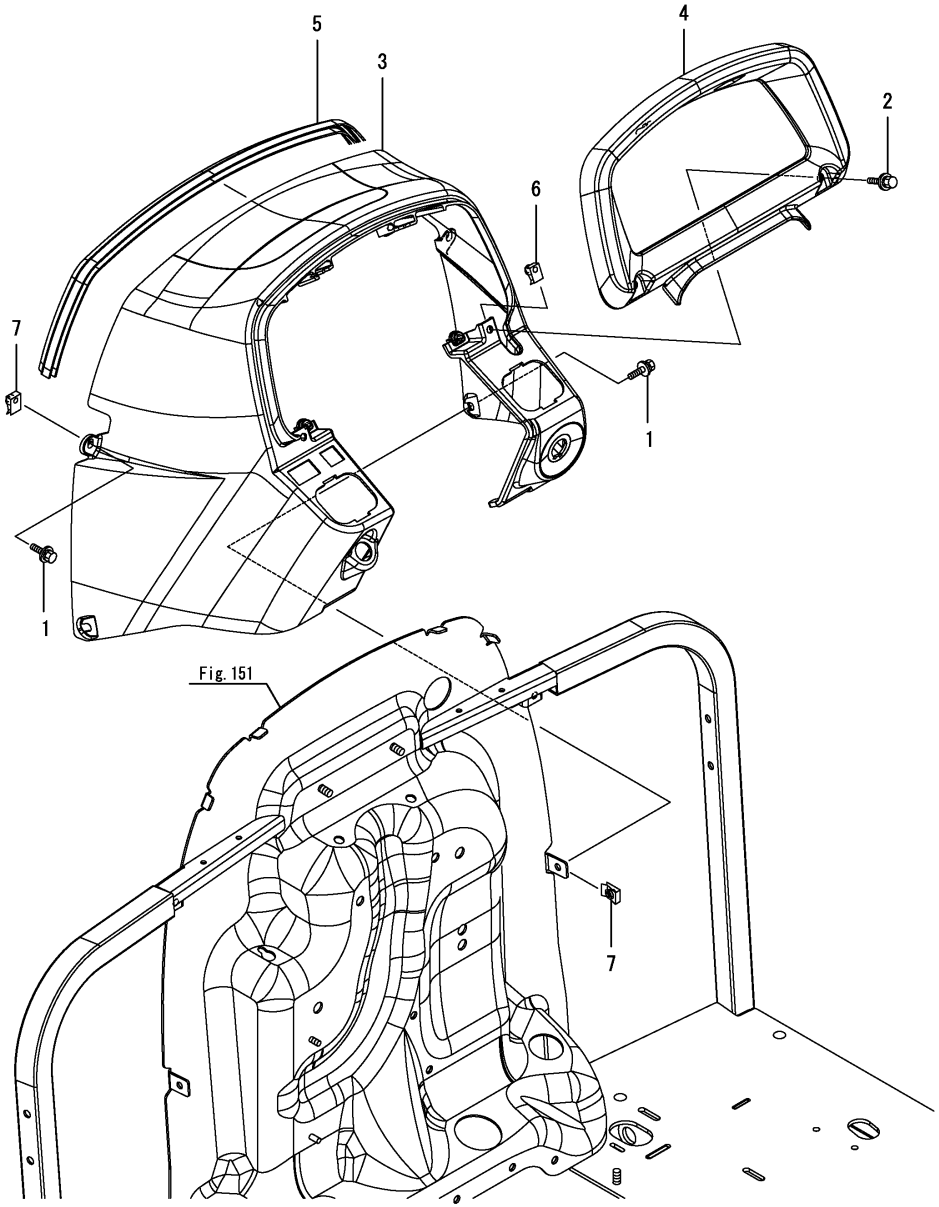

No.	Lev.	Parts No.	Description	Q'ty (A)	(B)	(C)	(D)	(E)	(F)	I	R
1	1	198072-60590	BOLT, M6X20	6	6	6	6				
2	1	198072-60590	BOLT, M6X20	4	4	4	4				
3	1	1A7180-61490	DASHBOARD ASSY, M	1	1	1	1				
4	1	1A7180-61510	COVER, METER	1	1	1	1				
5	1	1A7180-61590	WEATHER-STRIP, 660	1	1	1	1				
6	1	198071-61890	NUT, SPEED M6	4	4	4	4				
7	1	198071-61890	NUT, SPEED M6	4	4	4	4				

N:Old $\xleftrightarrow[\text{No}]{\text{Yes}}$ New, Q:Old $\xleftrightarrow[\text{Yes}]{\text{No}}$ New, R:Old $\xleftrightarrow[\text{Yes}]{\text{Yes}}$ New, S:Old $\xleftrightarrow[\text{No}]{\text{No}}$ New, W:Add, Z:Discontinued, F:Interchangeable by set, K:Q'ty Change

Copyright (C) 2014 YANMAR CO., LTD. All RightsReserved.

Fig.143. DASHBOARD(CABIN)

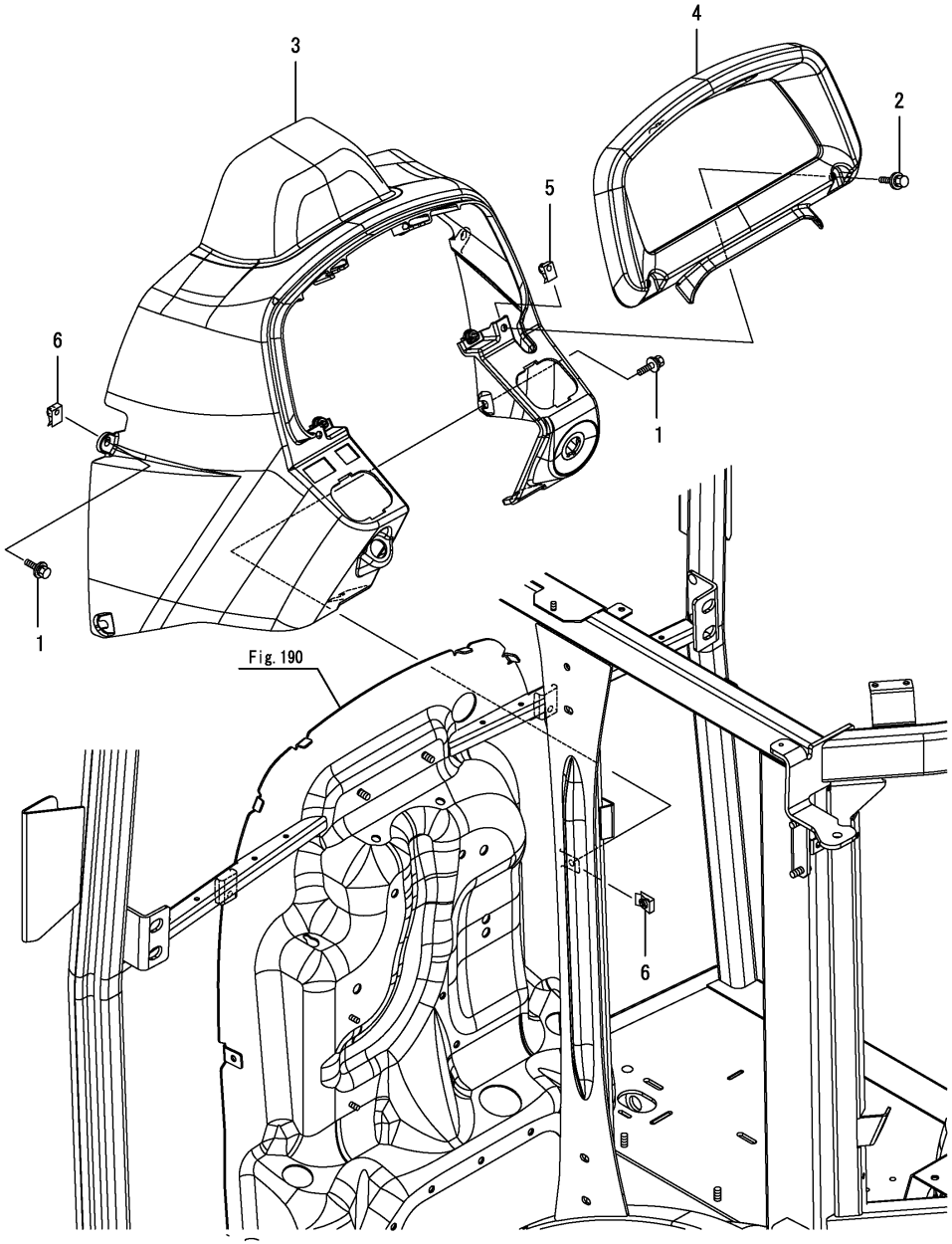

(A)=EG326Y (D)=EG334Y
(B)=EG328Y (E)=
(C)=EG330Y (F)=

No.	Lev.	Parts No.	Description	Q'ty (A)	(B)	(C)	(D)	(E)	(F)	I	R
1	1	198072-60590	BOLT, M6X20	6	6	6	6				
2	1	198072-60590	BOLT, M6X20	4	4	4	4				
3	1	1A7210-61490	DASHBOARD ASSY, M	1	1	1	1				
4	1	1A7180-61510	COVER, METER	1	1	1	1				
5	1	198071-61890	NUT, SPEED M6	4	4	4	4				
6	1	198071-61890	NUT, SPEED M6	4	4	4	4				

N:Old $\xleftrightarrow[\text{No}]{\text{Yes}}$ New, Q:Old $\xleftrightarrow[\text{Yes}]{\text{No}}$ New, R:Old $\xleftrightarrow[\text{Yes}]{\text{Yes}}$ New, S:Old $\xleftrightarrow[\text{No}]{\text{No}}$ New, W:Add, Z:Discontinued, F:Interchangeable by set, K:Q'ty Change

Copyright (C) 2014 YANMAR CO., LTD. All RightsReserved.

Fig.144. COLUMN COVER(FRONT)

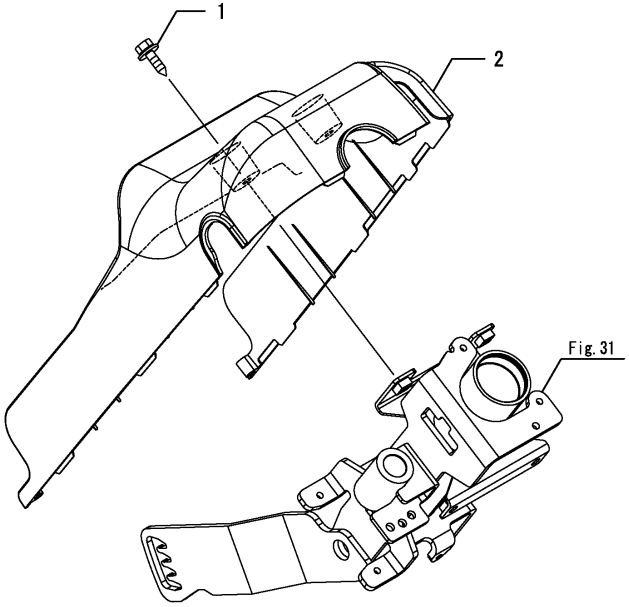

(A)=EG326Y (D)=EG334Y
(B)=EG328Y (E)=
(C)=EG330Y (F)=

No.	Lev.	Parts No.	Description	Q'ty (A)	(B)	(C)	(D)	(E)	(F)	I	R
1	1	198072-60590	BOLT, M6X20	2	2	2	2				
2	1	1A7180-61540	COVER, COLUMN FRONT	1	1	1	1				

N:Old $\xleftarrow[\text{No}]{\text{Yes}}$ New, Q:Old $\xleftarrow[\text{Yes}]{\text{No}}$ New, R:Old $\xleftarrow[\text{Yes}]{\text{Yes}}$ New, S:Old $\xleftarrow[\text{No}]{\text{No}}$ New, W:Add, Z:Discontinued, F:Interchangeable by set, K:Q'ty Change

Copyright (C) 2014 YANMAR CO., LTD. All RightsReserved.

Fig.145. COLUMN COVER(REAR)

(A)=EG326Y
(B)=EG328Y
(C)=EG330Y
(D)=EG334Y
(E)=
(F)=

No.	Lev.	Parts No.	Description	Q'ty (A)	(B)	(C)	(D)	(E)	(F)	I	R
1	1	198072-60590	BOLT, M6X20	3	3	3	3				
2	1	1A7180-61530	COVER, COLUMN REAR	1	1	1	1				
3	1	194940-61790	SCREW, TAPPING M5X16	2	2	2	2				

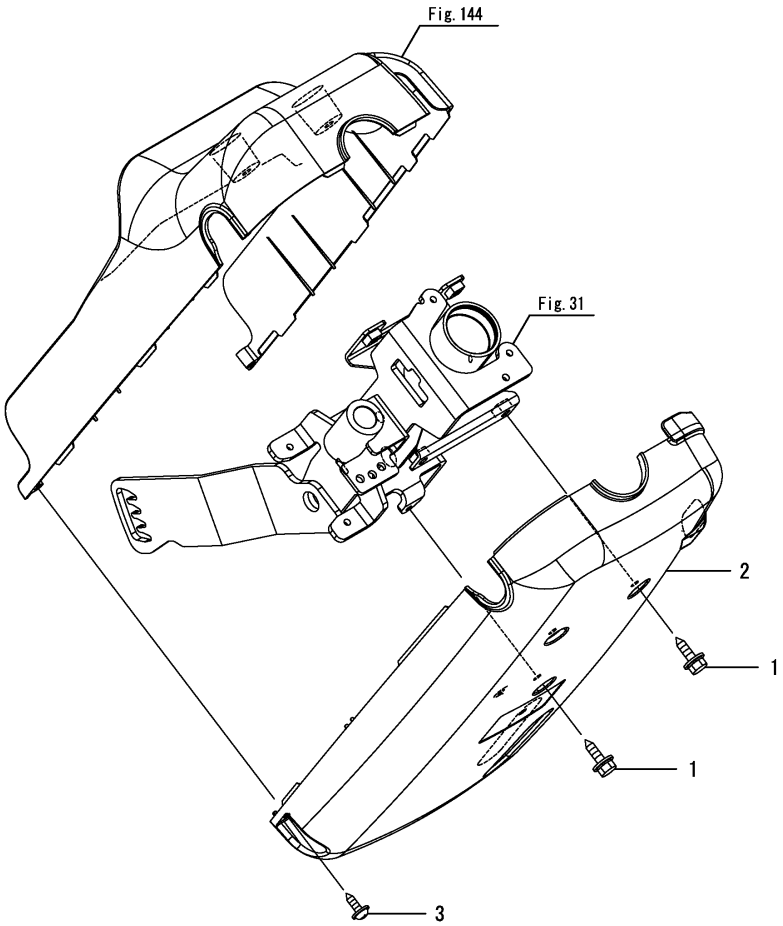

N:Old $\xleftarrow[\text{No}]{\text{Yes}}$ New, Q:Old $\xleftarrow[\text{Yes}]{\text{No}}$ New, R:Old $\xleftarrow[\text{Yes}]{\text{Yes}}$ New, S:Old $\xleftarrow[\text{No}]{\text{No}}$ New, W:Add, Z:Discontinued, F:Interchangeable by set, K:Q'ty Change

Copyright (C) 2014 YANMAR CO., LTD. All RightsReserved.

Fig.146. FENDER

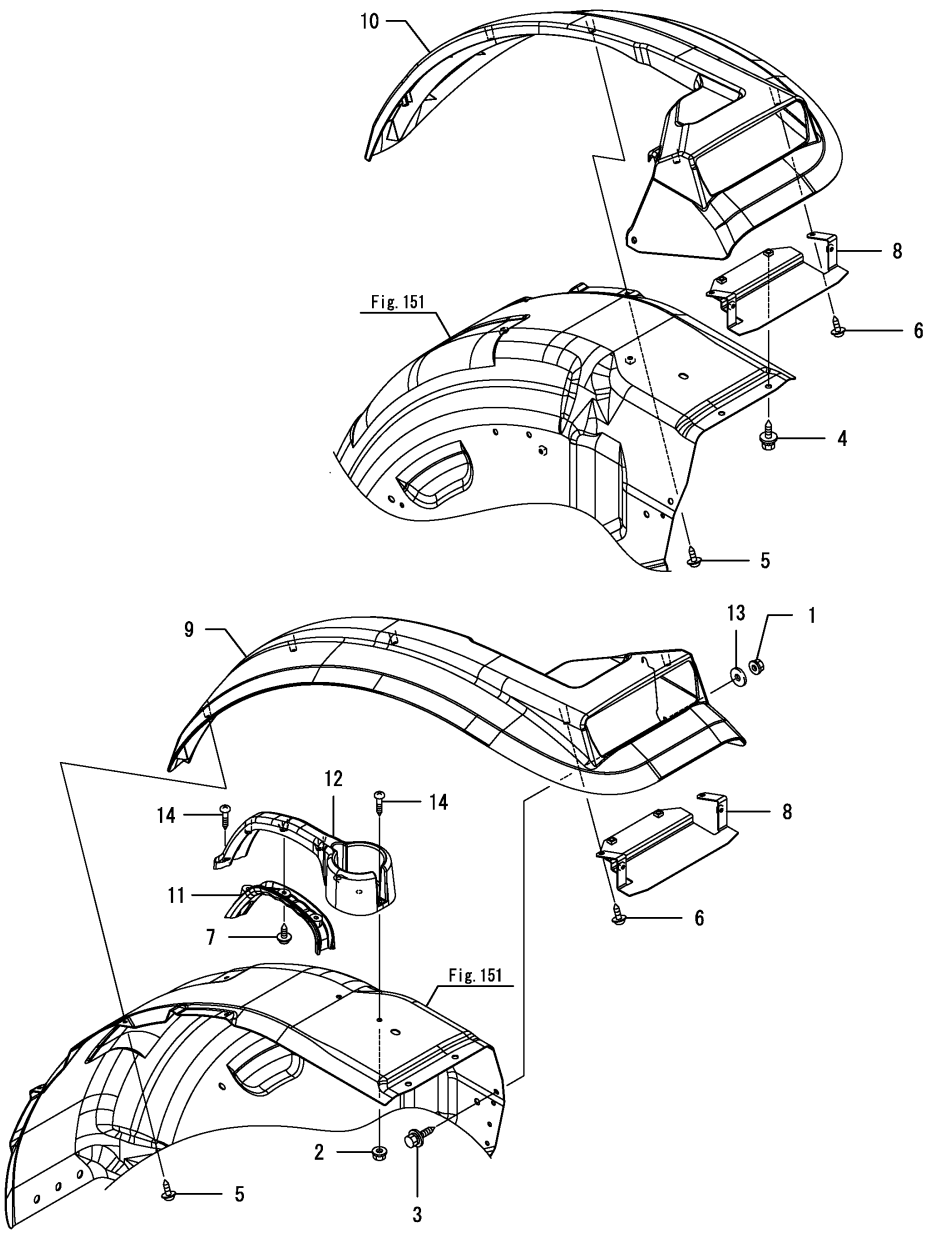

(A)=EG326Y (D)=EG334Y
(B)=EG328Y (E)=
(C)=EG330Y (F)=

No.	Lev.	Parts No.	Description	Q'ty (A)	(B)	(C)	(D)	(E)	(F)	I	R
1	1	194990-22130	NUT, M6	2	2	2	2				
2	1	194990-22130	NUT, M6	3	3	3	3				
3	1	198072-60590	BOLT, M6X20	2	2	2	2				
4	1	198072-60590	BOLT, M6X20	4	4	4	4				
5	1	194940-61790	SCREW, TAPPING M5X16	6	6	6	6				
6	1	194940-61790	SCREW, TAPPING M5X16	4	4	4	4				
7	1	194940-61790	SCREW, TAPPING M5X16	3	3	3	3				
8	1	1A7180-62080	STAY ASSY, LAMP	2	2	2	2				
9	1	1A7180-62130	FENDER, OVER L	1	1	1	1				
10	1	1A7180-62140	FENDER, OVER R	1	1	1	1				
11	1	1A8070-63640	COVER, GRIP	1	1	1	1				
12	1	1A7180-63680	ARMREST	1	1	1	1				
13	1	22157-060000	WASHER, 6	2	2	2	2				
14	1	26589-060202	SCREW, M6X20	3	3	3	3				

N:Old $\overset{\text{Yes}}{\underset{\text{No}}{\leftrightarrows}}$ New, Q:Old $\overset{\text{No}}{\underset{\text{Yes}}{\leftrightarrows}}$ New, R:Old $\overset{\text{Yes}}{\underset{\text{Yes}}{\leftrightarrows}}$ New, S:Old $\overset{\text{No}}{\underset{\text{No}}{\leftrightarrows}}$ New, W:Add, Z:Discontinued, F:Interchangeable by set, K:Q'ty Change

Copyright (C) 2014 YANMAR CO., LTD. All RightsReserved.

Fig.147. FENDER(CABIN)

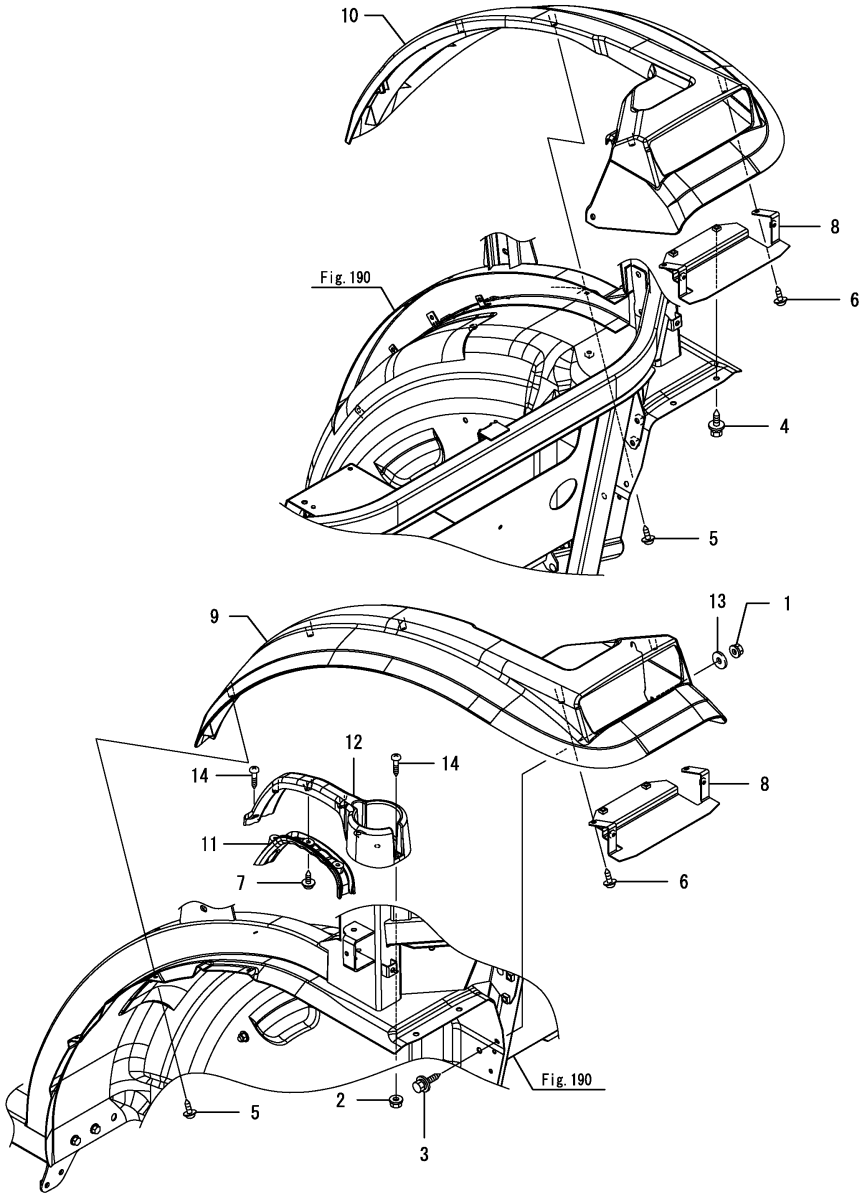

(A)=EG326Y (D)=EG334Y
(B)=EG328Y (E)=
(C)=EG330Y (F)=

No.	Lev.	Parts No.	Description	Q'ty (A)	(B)	(C)	(D)	(E)	(F)	I	R
1	1	194990-22130	NUT, M6	2	2	2	2				
2	1	194990-22130	NUT, M6	3	3	3	3				
3	1	198072-60590	BOLT, M6X20	2	2	2	2				
4	1	198072-60590	BOLT, M6X20	4	4	4	4				
5	1	194940-61790	SCREW, TAPPING M5X16	6	6	6	6				
6	1	194940-61790	SCREW, TAPPING M5X16	4	4	4	4				
7	1	194940-61790	SCREW, TAPPING M5X16	3	3	3	3				
8	1	1A7180-62080	STAY ASSY, LAMP	2	2	2	2				
9	1	1A7180-62130	FENDER, OVER L	1	1	1	1				
10	1	1A7180-62140	FENDER, OVER R	1	1	1	1				
11	1	1A8070-63640	COVER, GRIP	1	1	1	1				
12	1	1A7180-63680	ARMREST	1	1	1	1				
13	1	22157-060000	WASHER, 6	2	2	2	2				
14	1	26589-060162	SCREW, M6	3	3	3	3				

Remarks
* Applied to the following models.
EG326, EG328, EG330, EG334

N:Old $\xleftarrow[\text{No}]{\text{Yes}}$ New, Q:Old $\xleftarrow[\text{Yes}]{\text{No}}$ New, R:Old $\xleftarrow[\text{Yes}]{\text{Yes}}$ New, S:Old $\xleftarrow[\text{No}]{\text{No}}$ New, W:Add, Z:Discontinued, F:Interchangeable by set, K:Q'ty Change

Copyright (C) 2014 YANMAR CO., LTD. All RightsReserved.

Fig.251. FENDER(A,K,KW,KWA)

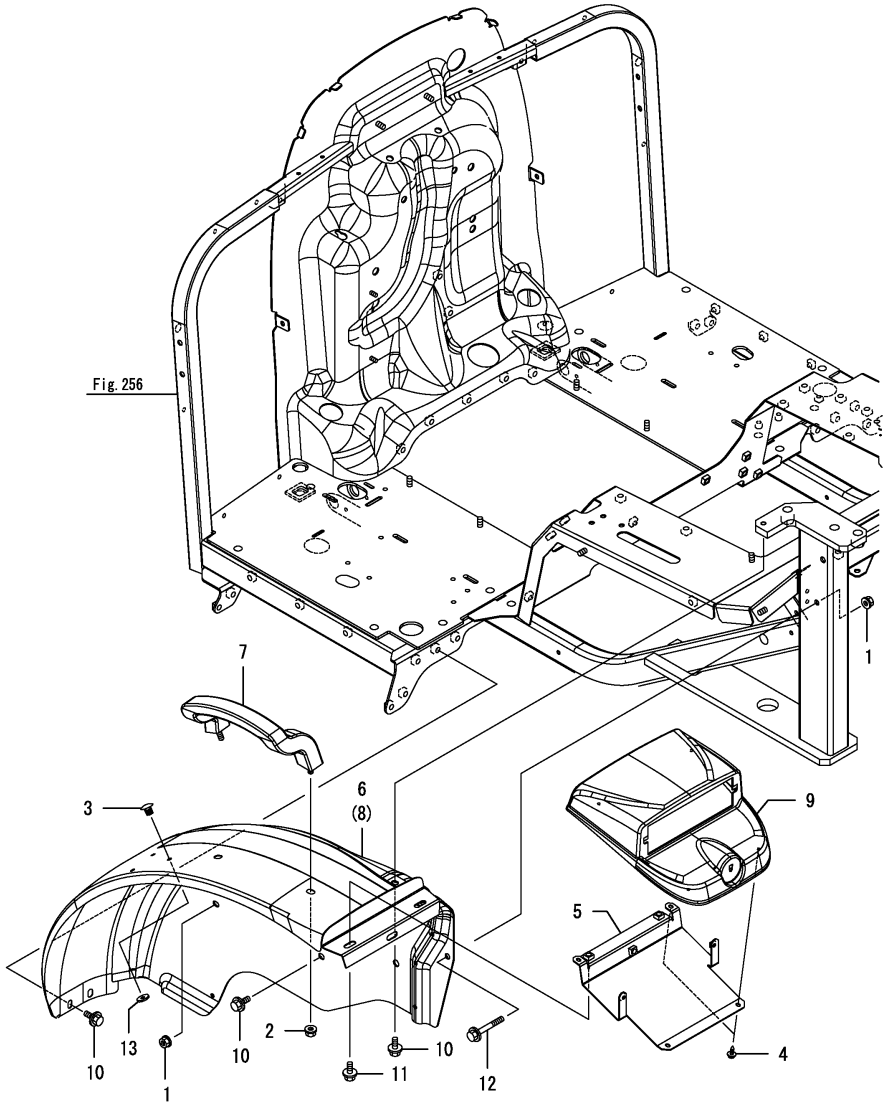

(A)=EG326Y (D)=EG334Y
(B)=EG328Y (E)=
(C)=EG330Y (F)=

No.	Lev.	Parts No.	Description	Q'ty (A)	(B)	(C)	(D)	(E)	(F)	I	R
1	1	194990-22140	NUT, M8			6	6				
2	1	194990-22140	NUT, M8			4	4				
3	1	1C6780-37180	FASTENER, CUSHION			6	6				
4	1	194940-61790	SCREW, TAPPING M5X16			8	8				
5	1	1A7160-62080	STAY ASSY, REAR LAMP			2	2				
6	1	1A7160-62100	FENDER ASSY, L			1	1				
7	1	1A7510-62100	BAR, ASSIST			2	2				
8	1	1A7160-62110	FENDER ASSY, R			1	1				
9	1	1A7160-62250	FENDER, REAR			2	2				
10	1	26106-080122	BOLT, M8X 12 PLATED			8	8				
11	1	26106-080162	BOLT, M8X 16 PLATED			6	6				
12	1	26106-080602	BOLT, M8X 60 PLATED			2	2				
13	1	22157-060000	WASHER, 6			6	6			W	
			(C=F300001) (D=F400004)								

Remarks
* Applied to the following models.
EG330A, EG330K, EG330KW, EG334A, EG334KW, EG334KWA

N:Old $\frac{\text{Yes}}{\text{No}}$ New, Q:Old $\frac{\text{No}}{\text{Yes}}$ New, R:Old $\frac{\text{Yes}}{\text{Yes}}$ New, S:Old $\frac{\text{No}}{\text{No}}$ New, W:Add, Z:Discontinued, F:Interchangeable by set, K:Q'ty Change

Copyright (C) 2014 YANMAR CO., LTD. All RightsReserved.

Fig.148. LEVER GUIDE(LEFT)

(A)=EG326Y
(B)=EG328Y
(C)=EG330Y
(D)=EG334Y
(E)=
(F)=

No.	Lev.	Parts No.	Description	Q'ty (A)	(B)	(C)	(D)	(E)	(F)	I	R
1	1	198072-60590	BOLT, M6X20	4	4	4	4				
2	1	1A7180-63610	GUIDE, LEVER	1	1	1	1				

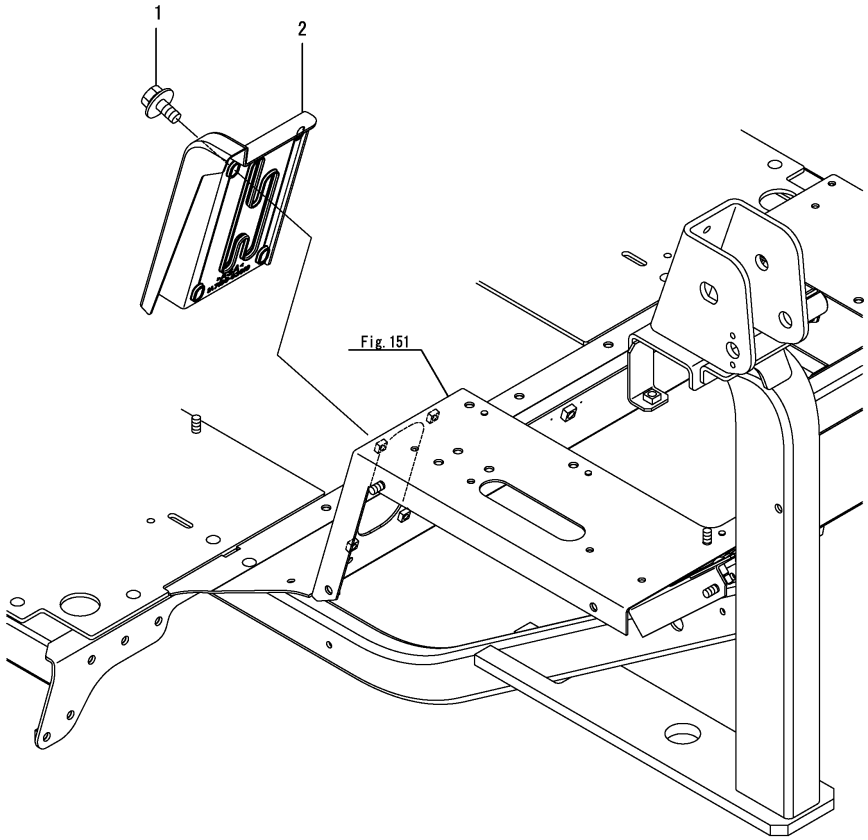

Remarks
* Applied to the following models.
EG326, EG328, EG330, EG334
EG330A(Cabin specification), EG334A(Cabin specification)

N:Old $\xleftrightarrow[\text{No}]{\text{Yes}}$ New, Q:Old $\xleftrightarrow[\text{Yes}]{\text{No}}$ New, R:Old $\xleftrightarrow[\text{Yes}]{\text{Yes}}$ New, S:Old $\xleftrightarrow[\text{No}]{\text{No}}$ New, W:Add, Z:Discontinued, F:Interchangeable by set, K:Q'ty Change

Copyright (C) 2014 YANMAR CO., LTD. All RightsReserved.

Fig.252. LEVER GUIDE(LEFT)(A,K,KW)

(A)=EG326Y
(B)=EG328Y
(C)=EG330Y
(D)=EG334Y
(E)=
(F)=

No.	Lev.	Parts No.	Description	Q'ty (A)	(B)	(C)	(D)	(E)	(F)	I	R
1	1	1A7160-63610	GUIDE, LEVER PTO			1	1				
2	1	198460-83350	BOLT, M8X16			2	2				

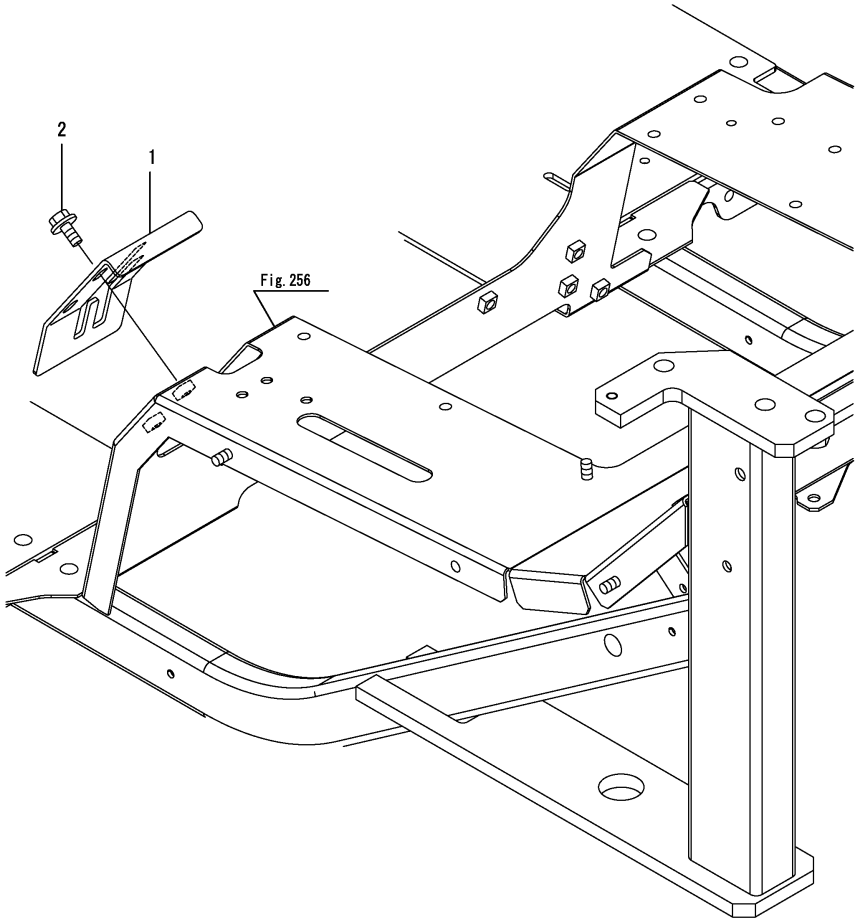

Remarks
* Applied to the following models.
EG330A(Rops specification), EG330K, EG330KW, EG334A(Rops specification), EG334KW

N:Old ◄Yes/No► New, Q:Old ◄No/Yes► New, R:Old ◄Yes/Yes► New, S:Old ◄No/No► New, W:Add, Z:Discontinued, F:Interchangeable by set, K:Q'ty Change

Copyright (C) 2014 YANMAR CO., LTD. All RightsReserved.

Fig.253. LEVER GUIDE(LEFT)(KW,KWA)(HIGH SPEED)

(A)=EG326Y
(B)=EG328Y
(C)=EG330Y
(D)=EG334Y
(E)=
(F)=

No.	Lev.	Parts No.	Description	Q'ty (A)	(B)	(C)	(D)	(E)	(F)	I	R
1	1	1A7160-63610	GUIDE, LEVER PTO			1	1				
2	1	198460-83350	BOLT, M8X16			2	2				

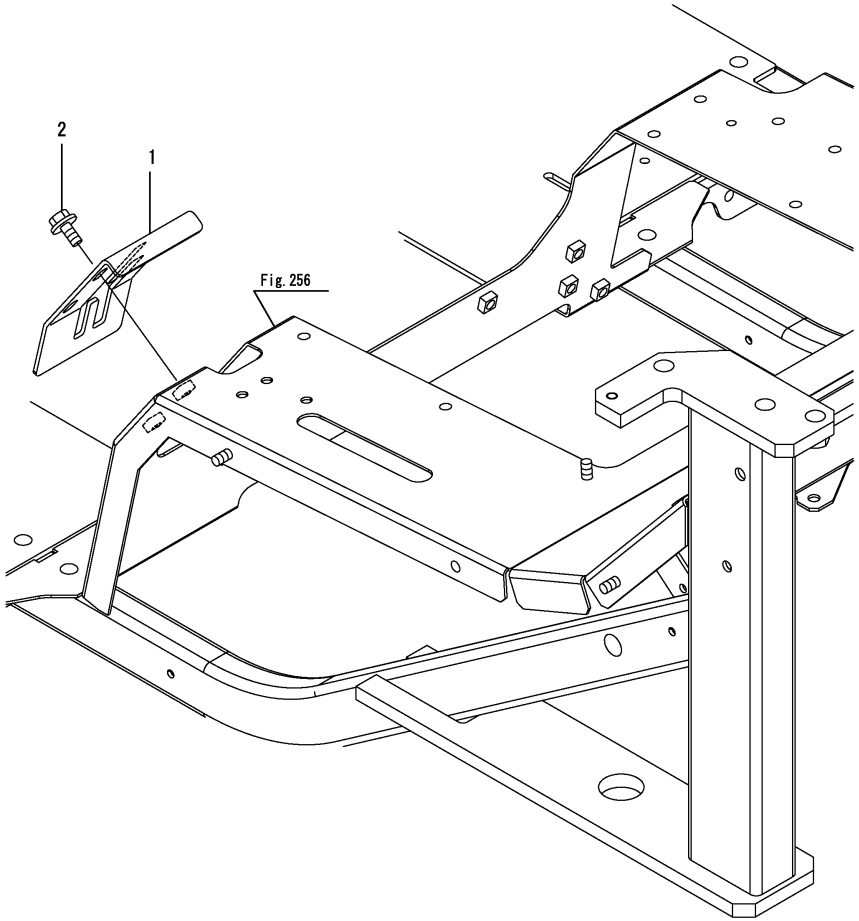

Remarks
* Applied to the following models.
EG330KW, EG334KW, EG334KWA

N:Old $\xleftrightarrow[\text{No}]{\text{Yes}}$ New, Q:Old $\xleftrightarrow[\text{Yes}]{\text{No}}$ New, R:Old $\xleftrightarrow[\text{Yes}]{\text{Yes}}$ New, S:Old $\xleftrightarrow[\text{No}]{\text{No}}$ New, W:Add, Z:Discontinued, F:Interchangeable by set, K:Q'ty Change

Copyright (C) 2014 YANMAR CO., LTD. All RightsReserved.

Fig.149. LEVER GUIDE(RIGHT)

(A)=EG326Y
(B)=EG328Y
(C)=EG330Y
(D)=EG334Y
(E)=
(F)=

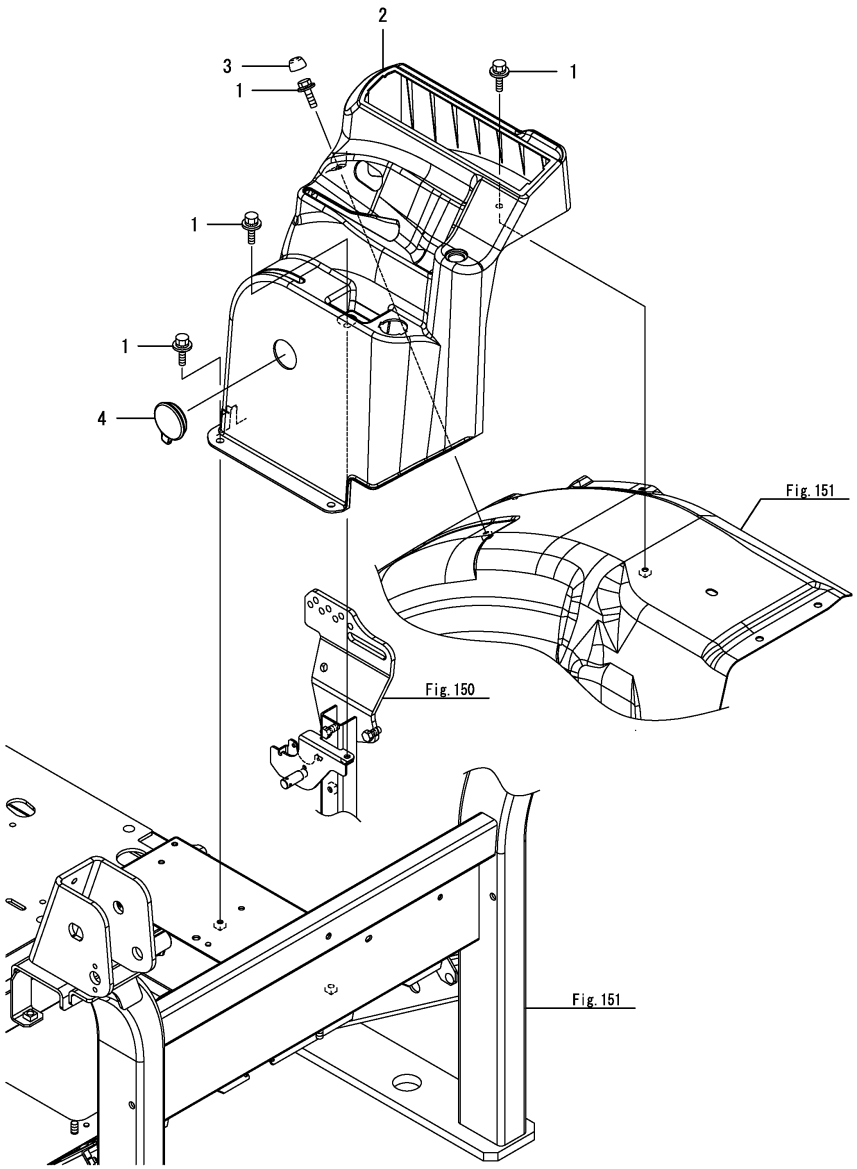

No.	Lev.	Parts No.	Description	Q'ty (A)	(B)	(C)	(D)	(E)	(F)	I	R
1	1	198072-60590	BOLT, M6X20	5	5	5	5				
2	1	1A7180-63600	GUIDE, LEVER R	1	1	1	1				
3	1	198200-63620	CAP, BOLT 6	1	1	1	1				
4	1	198094-85710	GROMMET, 38	1	1	1	1				

Remarks
* Applied to the following models.
EG326, EG328, EG330, EG334
EG330A(Cabin specification), EG334A(Cabin specification)

N:Old $\xleftrightarrow[\text{No}]{\text{Yes}}$ New, Q:Old $\xleftrightarrow[\text{Yes}]{\text{No}}$ New, R:Old $\xleftrightarrow[\text{Yes}]{\text{Yes}}$ New, S:Old $\xleftrightarrow[\text{No}]{\text{No}}$ New, W:Add, Z:Discontinued, F:Interchangeable by set, K:Q'ty Change

Copyright (C) 2014 YANMAR CO., LTD. All RightsReserved.

Fig.254. LEVER GUIDE(RIGHT)(A,K,KW,KWA)

(A)=EG326Y
(B)=EG328Y
(C)=EG330Y
(D)=EG334Y
(E)=
(F)=

No.	Lev.	Parts No.	Description	Q'ty (A)	(B)	(C)	(D)	(E)	(F)	I	R
1	1	198072-60590	BOLT, M6X20			5	5				
2	1	1A7160-63600	GUIDE, LEVER R			1	1				

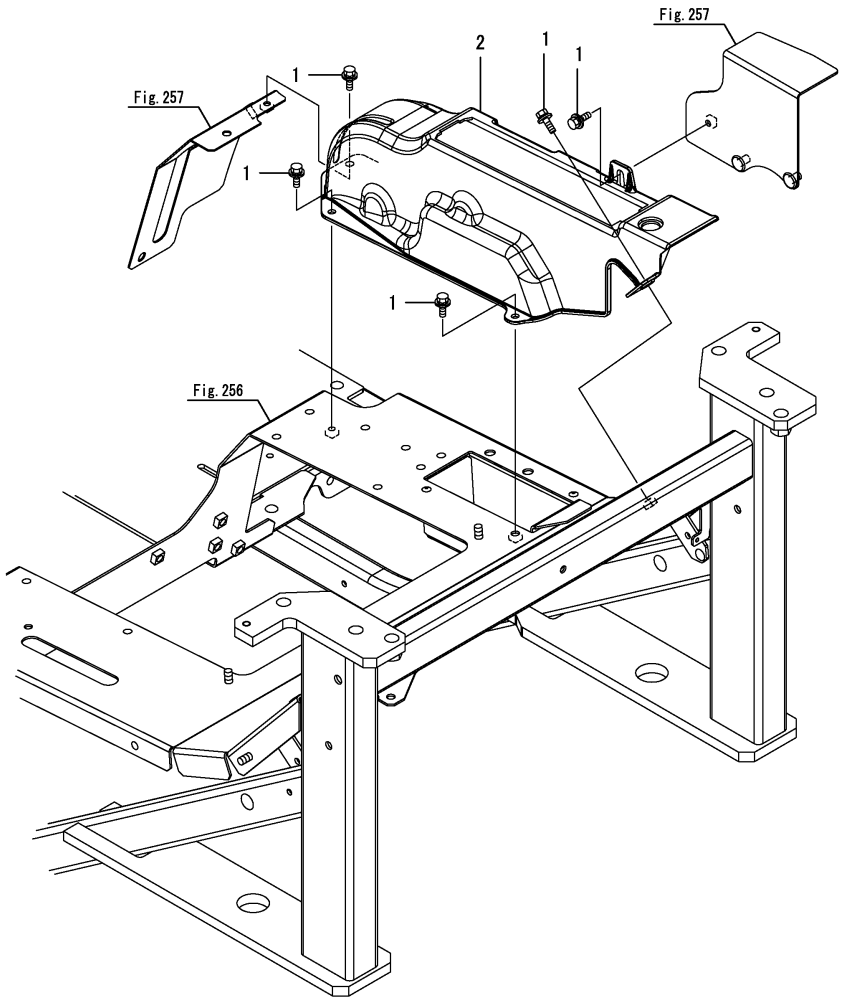

Remarks
* Applied to the following models.
EG330A(Rops specification), EG330K, EG330KW, EG334A(Rops specification), EG334KW, EG334KWA

N:Old ◄Yes/No► New, Q:Old ◄No/Yes► New, R:Old ◄Yes/Yes► New, S:Old ◄No/No► New, W:Add, Z:Discontinued, F:Interchangeable by set, K:Q'ty Change

Copyright (C) 2014 YANMAR CO., LTD. All RightsReserved.

Fig.150. ARMREST

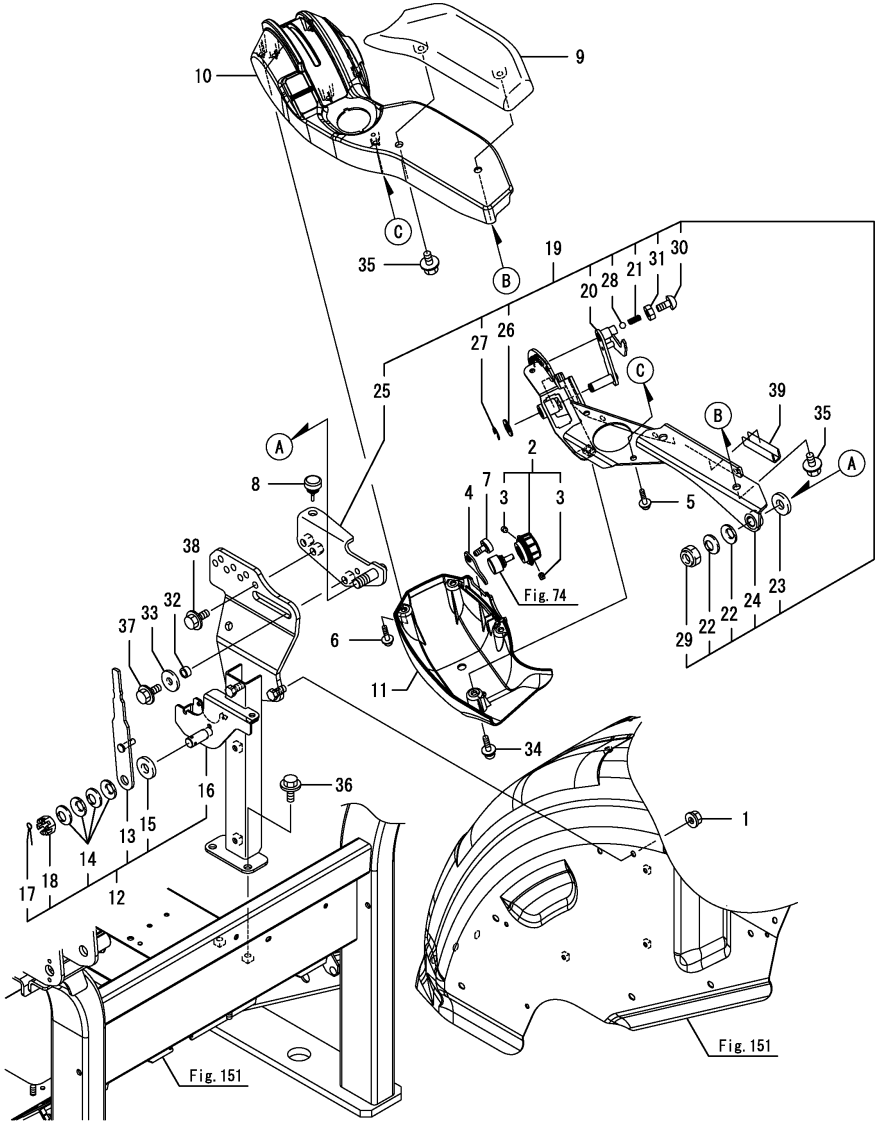

(A)=EG326Y (D)=EG334Y
(B)=EG328Y (E)=
(C)=EG330Y (F)=

No.	Lev.	Parts No.	Description	Q'ty (A)	(B)	(C)	(D)	(E)	(F)	I	R
1	1	194990-22140	NUT, M8	2	2	2	2				
2	1	1A7180-27110	DIAL, SPEED	1	1	1	1				
3	2	26979-040052	SCREW, M4X 5	2	2	2	2				
4	1	1A7180-27290	PLATE, LOCK	1	1	1	1				
5	1	194940-61790	SCREW, TAPPING M5X16	3	3	3	3				
6	1	194940-61790	SCREW, TAPPING M5X16	3	3	3	3				
7	1	1A7180-61790	KNOB, 6X15	1	1	1	1				
8	1	194330-62530	STOPPER, PEDAL	1	1	1	1				
9	1	1A7180-63150	CUSHION, ARMREST	1	1	1	1				
10	1	1A7180-63271	COVER, ARMREST	1	1	1	1				
11	1	1A7180-63280	COVER, ARMREST	1	1	1	1				
12	1	1A7180-63520	FRAME, BASE	1	1	1	1				
13	2	1A7180-47310	LEVER ASSY, POSITION	1	1	1	1				
14	2	194151-47760	WASHER, 12	4	4	4	4				
15	2	194310-47790	PLATE, FRICTION	1	1	1	1				
16	2	1A7180-63300	FRAME ASSY, BASE	1	1	1	1				
17	2	22417-250250	PIN, COTTER 2.5X25	1	1	1	1				
18	2	26877-120002	NUT, CASTLE M12	1	1	1	1				
19	1	1A7180-63530	LEVER, ARMREST	1	1	1	1				
20	2	1A7180-27200	LEVER ASSY, MAIN	1	1	1	1				
21	2	1A7180-27310	SPRING, MAIN LEVER	1	1	1	1				
22	2	194151-47760	WASHER, 12	2	2	2	2				
23	2	194310-47790	PLATE, FRICTION	1	1	1	1				
24	2	1A7180-63400	BRACKET, ARMREST	1	1	1	1				
25	2	1A7180-63470	STAY ASSY	1	1	1	1				
26	2	22137-100000	WASHER, 10	1	1	1	1				
27	2	22272-000080	RING, E- 8	1	1	1	1				
28	2	24190-070001	BALL, STEEL 7/32	1	1	1	1				
29	2	26356-120002	NUT, M12	1	1	1	1				
30	2	26557-060202	SCREW, M6X20	1	1	1	1				
31	2	26756-060002	NUT, LOCK M6	1	1	1	1				
32	1	1A7180-63550	COLLAR, 8X12X6.3	1	1	1	1				
33	1	22157-080000	WASHER, 8	1	1	1	1				
34	1	26023-060162	SCREW, M6X16	1	1	1	1				
35	1	26106-080122	BOLT, M8X 12 PLATED	2	2	2	2				
36	1	26106-080162	BOLT, M8X 16 PLATED	2	2	2	2				
37	1	26106-080202	BOLT, M8X 20 PLATED	1	1	1	1				
38	1	26106-080202	BOLT, M8X 20 PLATED	1	1	1	1				
39	1	1A7140-61520	TRIM, 50	1	1	1	1			W	

(A=F090706) (B=F080594) (C=F070860) (D=F060746)

Remarks
* Applied to the following models.
EG326, EG328, EG330, EG334
EG330A(Cabin specification), EG334A(Cabin specification)

N:Old $\xleftrightarrow[\text{No}]{\text{Yes}}$ New, Q:Old $\xleftrightarrow[\text{Yes}]{\text{No}}$ New, R:Old $\xleftrightarrow[\text{Yes}]{\text{Yes}}$ New, S:Old $\xleftrightarrow[\text{No}]{\text{No}}$ New, W:Add, Z:Discontinued, F:Interchangeable by set, K:Q'ty Change

Copyright (C) 2014 YANMAR CO., LTD. All RightsReserved.

Fig.255. ARMREST(A,K,KW,KWA)

(A)=EG326Y
(B)=EG328Y
(C)=EG330Y
(D)=EG334Y
(E)=
(F)=

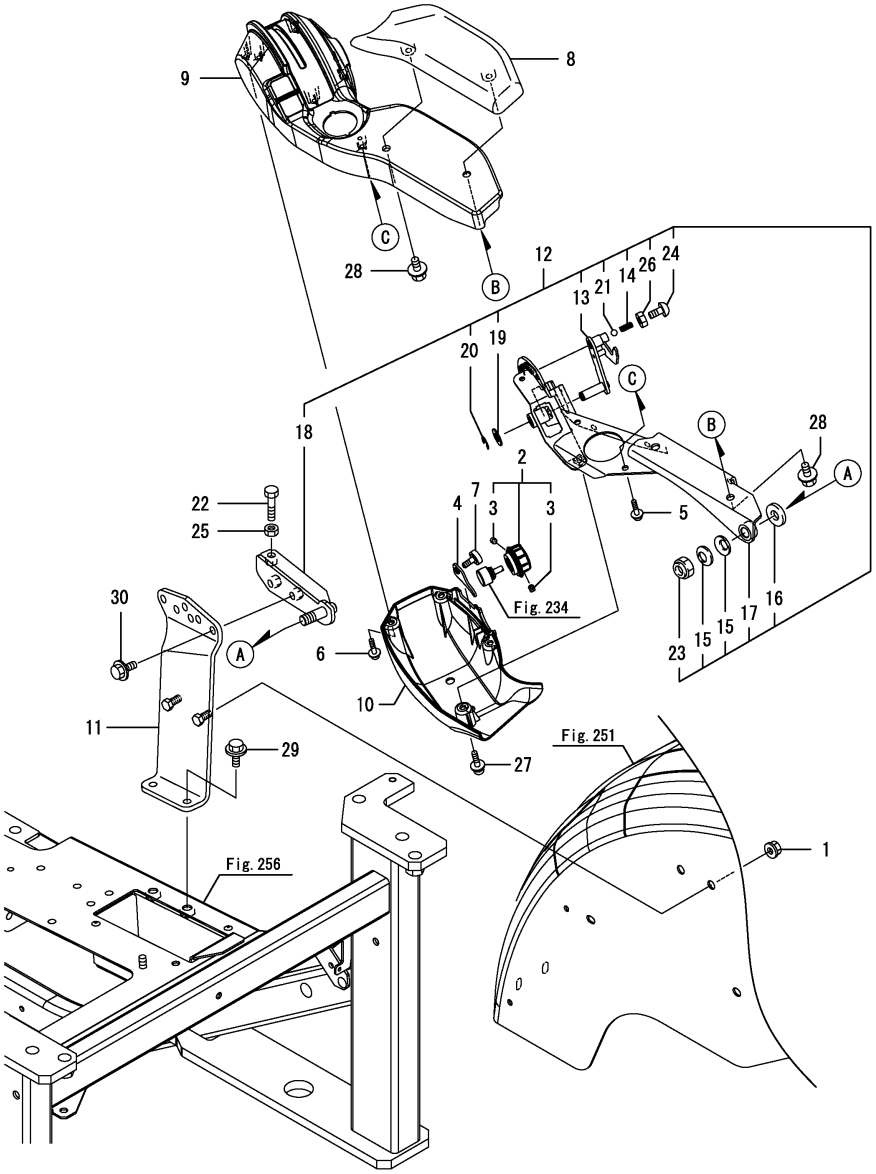

No.	Lev.	Parts No.	Description	Q'ty (A)	(B)	(C)	(D)	(E)	(F)	I	R
1	1	194990-22140	NUT, M8			2	2				
2	1	1A7180-27110	DIAL, SPEED			1	1				
3	2	26979-040052	SCREW, M4X 5			2	2				
4	1	1A7180-27290	PLATE, LOCK			1	1				
5	1	194940-61790	SCREW, TAPPING M5X16			3	3				
6	1	194940-61790	SCREW, TAPPING M5X16			3	3				
7	1	1A7180-61790	KNOB, 6X15			1	1				
8	1	1A7180-63150	CUSHION, ARMREST			1	1				
9	1	1A7180-63271	COVER, ARMREST			1	1				
10	1	1A7180-63280	COVER, ARMREST			1	1				
11	1	1A7160-63300	FRAME, ARMREST			1	1				
12	1	1A7160-63530	LEVER UNIT, ARMREST			1	1				
13	2	1A7180-27200	LEVER ASSY, MAIN			1	1				
14	2	1A7180-27310	SPRING, MAIN LEVER			1	1				
15	2	194151-47760	WASHER, 12			2	2				
16	2	194310-47790	PLATE, FRICTION			1	1				
17	2	1A7180-63400	BRACKET, ARMREST			1	1				
18	2	1A7160-63470	STAY ASSY, ADJUST			1	1				
19	2	22137-100000	WASHER, 10			1	1				
20	2	22272-000080	RING, E- 8			1	1				
21	2	24190-070001	BALL, STEEL 7/32			1	1				
22	2	26116-080354	BOLT, M8X 35 PLATED			1	1				
23	2	26356-120002	NUT, M12			1	1				
24	2	26557-060202	SCREW, M6X20			1	1				
25	2	26716-080002	NUT, M8			1	1				
26	2	26756-060002	NUT, LOCK M6			1	1				
27	1	26023-060162	SCREW, M6X16			1	1				
28	1	26106-080122	BOLT, M8X 12 PLATED			2	2				
29	1	26106-080162	BOLT, M8X 16 PLATED			2	2				
30	1	26106-080202	BOLT, M8X 20 PLATED			2	2				

Remarks
* Applied to the following models.
EG330A(Rops specification), EG330K, EG330KW, EG334A(Rops specification), EG334KW, EG334KWA

N:Old $\overset{\text{Yes}}{\underset{\text{No}}{\leftrightarrow}}$ New, Q:Old $\overset{\text{No}}{\underset{\text{Yes}}{\leftrightarrow}}$ New, R:Old $\overset{\text{Yes}}{\underset{\text{Yes}}{\leftrightarrow}}$ New, S:Old $\overset{\text{No}}{\underset{\text{No}}{\leftrightarrow}}$ New, W:Add, Z:Discontinued, F:Interchangeable by set, K:Q'ty Change

Copyright (C) 2014 YANMAR CO., LTD. All RightsReserved.

Fig.151. FLOOR

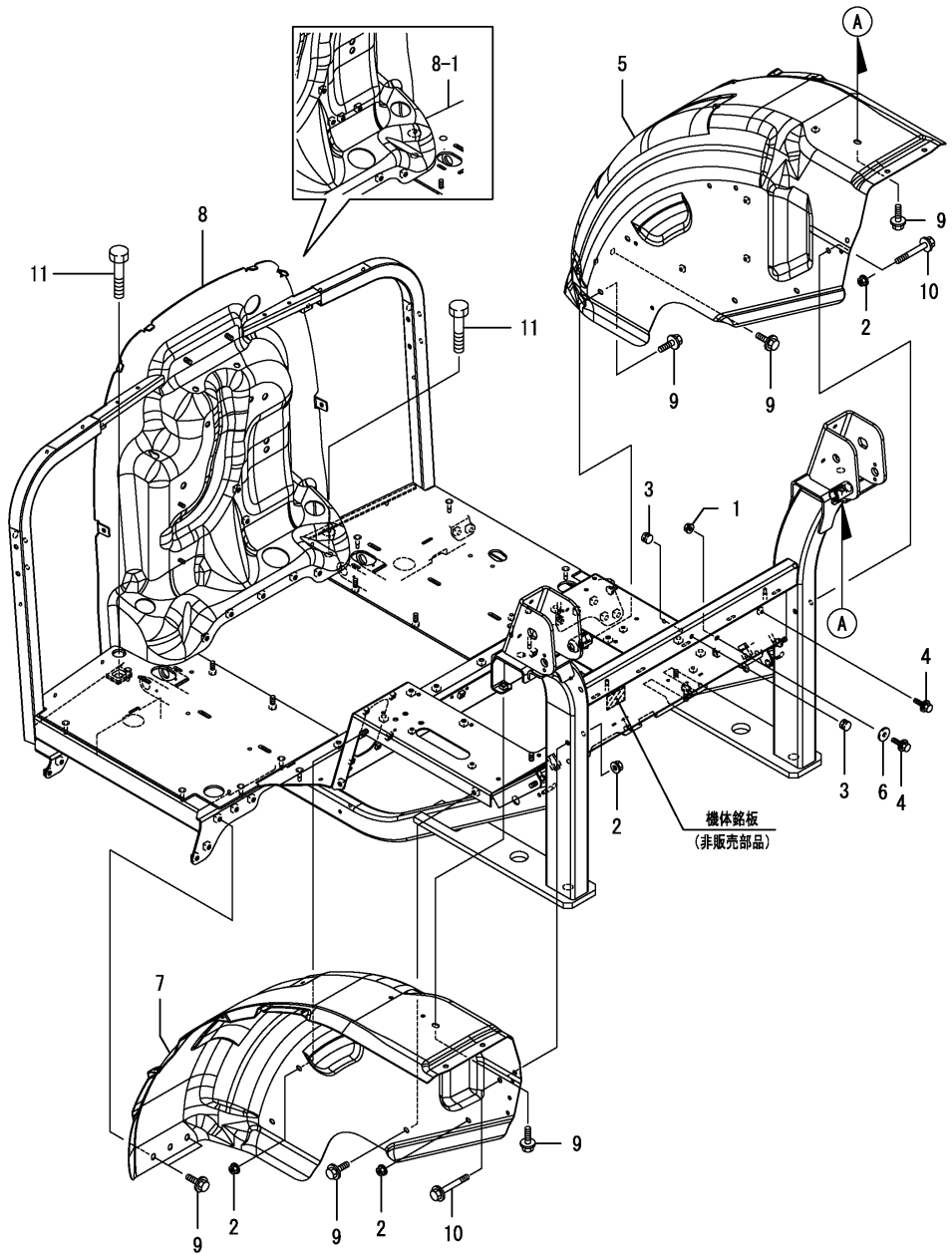

(A)=EG326Y (D)=EG334Y
(B)=EG328Y (E)=
(C)=EG330Y (F)=

No.	Lev.	Parts No.	Description	Q'ty (A)	(B)	(C)	(D)	(E)	(F)	I	R
1	1	194990-22130	NUT, M6	1	1	1	1				
2	1	194990-22140	NUT, M8	6	6	6	6				
3	1	1C6053-26020	CAP, RUBBER 8X3	2	2	2	2				
4	1	198072-60590	BOLT, M6X20	2	2	2	2				
5	1	1A7180-62110	FENDER ASSY, SIDE R	1	1	1	1				
5-1	1	1A7180-62111	FEND-SIDE ASSY, R	1	1	1	1			N	
	(A=F090706)	(B=F080594)	(C=F071251) (D=F061080)								
6	1	198220-62150	WASHER	1	1	1	1				
7	1	1A7180-62150	FENCE, SIDE L	1	1	1	1				
7-1	1	1A7180-62151	FENDER-SIDE, L	1	1	1	1			N	
	(A=F090706)	(B=F080594)	(C=F071251) (D=F061080)								
8	1	1A7140-62490	FLOOR ASSY, M	1	1	1	1				
8-1	1	1A7140-62491	FLOOR M ASSY,	1	1	1	1			S	
	(A=F090706)	(B=F080594)	(C=F071251) (D=F061080)								
9	1	26106-080122	BOLT, M8X 12 PLATED	10	10	10	10				
10	1	26106-080602	BOLT, M8X 60 PLATED	2	2	2	2				
11	1	26116-140702	BOLT, M14X 70 PLATED	2	2	2	2				

N:Old $\overset{\text{Yes}}{\underset{\text{No}}{\leftrightarrow}}$ New, Q:Old $\overset{\text{No}}{\underset{\text{Yes}}{\leftrightarrow}}$ New, R:Old $\overset{\text{Yes}}{\underset{\text{Yes}}{\leftrightarrow}}$ New, S:Old $\overset{\text{No}}{\underset{\text{No}}{\leftrightarrow}}$ New, W:Add, Z:Discontinued, F:Interchangeable by set, K:Q'ty Change

Copyright (C) 2014 YANMAR CO., LTD. All RightsReserved.

Fig.256. FLOOR(A,K,KW,KWA)

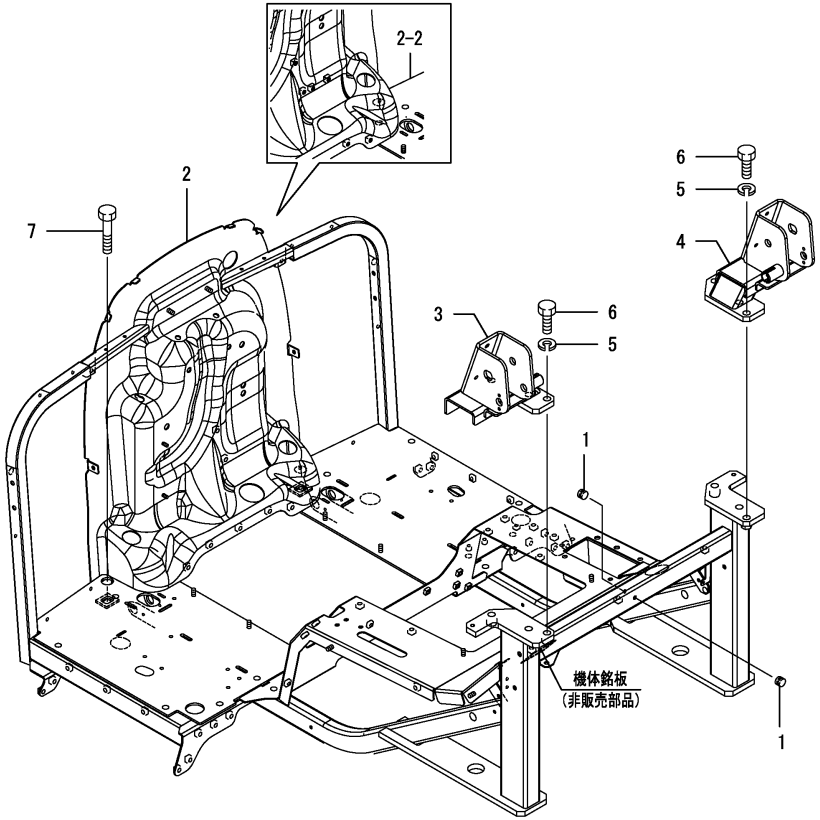

(A)=EG326Y (D)=EG334Y
(B)=EG328Y (E)=
(C)=EG330Y (F)=

No.	Lev.	Parts No.	Description	Q'ty (A)	(B)	(C)	(D)	(E)	(F)	I	R
1	1	1C6053-26020	CAP, RUBBER 8X3			2	2				
2	1	1A7160-62490	FLOOR M ASSY,			1	1				
2-1	1	1A7160-62491	FLOOR M ASSY,			1	1			N	
2-2	1	1A7160-62492	(C=F070945) (D=F060918) FLOOR M ASSY, (C=F071251) (D=F061080)			1	1			S	
3	1	1A7160-85200	FRAME ASSY, LOWER L			1	1				
4	1	1A7160-85210	FRAME ASSY, LOWER R			1	1				
5	1	22217-140000	WASHER, SPRING 14			4	4				
6	1	26116-140402	BOLT, M14X 40 PLATED			4	4				
7	1	26116-140702	BOLT, M14X 70 PLATED			2	2				

Remarks
* Applied to the following models.
EG330A, EG330K, EG330KW, EG334A, EG334KW, EG334KWA

N:Old $\xleftrightarrow[\text{No}]{\text{Yes}}$ New, Q:Old $\xleftrightarrow[\text{Yes}]{\text{No}}$ New, R:Old $\xleftrightarrow[\text{Yes}]{\text{Yes}}$ New, S:Old $\xleftrightarrow[\text{No}]{\text{No}}$ New, W:Add, Z:Discontinued, F:Interchangeable by set, K:Q'ty Change

Copyright (C) 2014 YANMAR CO., LTD. All RightsReserved.

Fig.152. FLOOR MOUNT

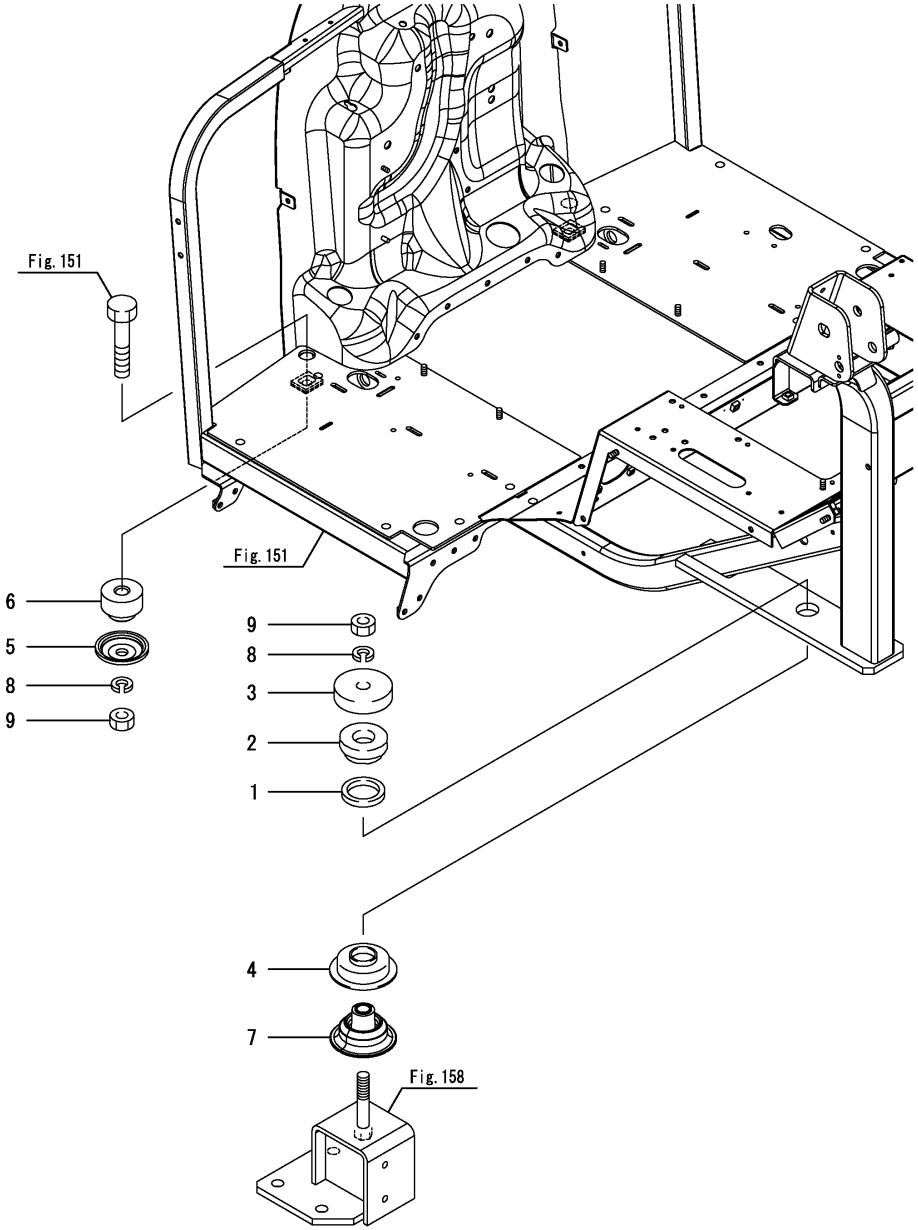

(A)=EG326Y (D)=EG334Y
(B)=EG328Y (E)=
(C)=EG330Y (F)=

No.	Lev.	Parts No.	Description	Q'ty (A)	(B)	(C)	(D)	(E)	(F)	I	R
1	1	198072-62790	RUBBER, STOPPER	2	2	2	2				
2	1	198071-62800	MOUNT, UPPER	2	2	2	2				
3	1	198071-62890	STOPPER, U	2	2	2	2				
4	1	198071-62900	STOPPER, MOUNT	2	2	2	2				
5	1	198200-62910	STOPPER, U	2	2	2	2				
6	1	1A7180-62980	COLLAR	2	2	2	2				
7	1	1A8110-62990	MOUNT, LOWER	2	2	2	2				
8	1	22217-140000	WASHER, SPRING 14	4	4	4	4				
9	1	26716-140002	NUT, M14	4	4	4	4				

N:Old $\frac{\text{Yes}}{\text{No}}$ New, Q:Old $\frac{\text{No}}{\text{Yes}}$ New, R:Old $\frac{\text{Yes}}{\text{Yes}}$ New, S:Old $\frac{\text{No}}{\text{No}}$ New, W:Add, Z:Discontinued, F:Interchangeable by set, K:Q'ty Change

Copyright (C) 2014 YANMAR CO., LTD. All RightsReserved.

Fig.153. FLOOR MOUNT(CABIN)

(A)=EG326Y
(B)=EG328Y
(C)=EG330Y
(D)=EG334Y
(E)=
(F)=

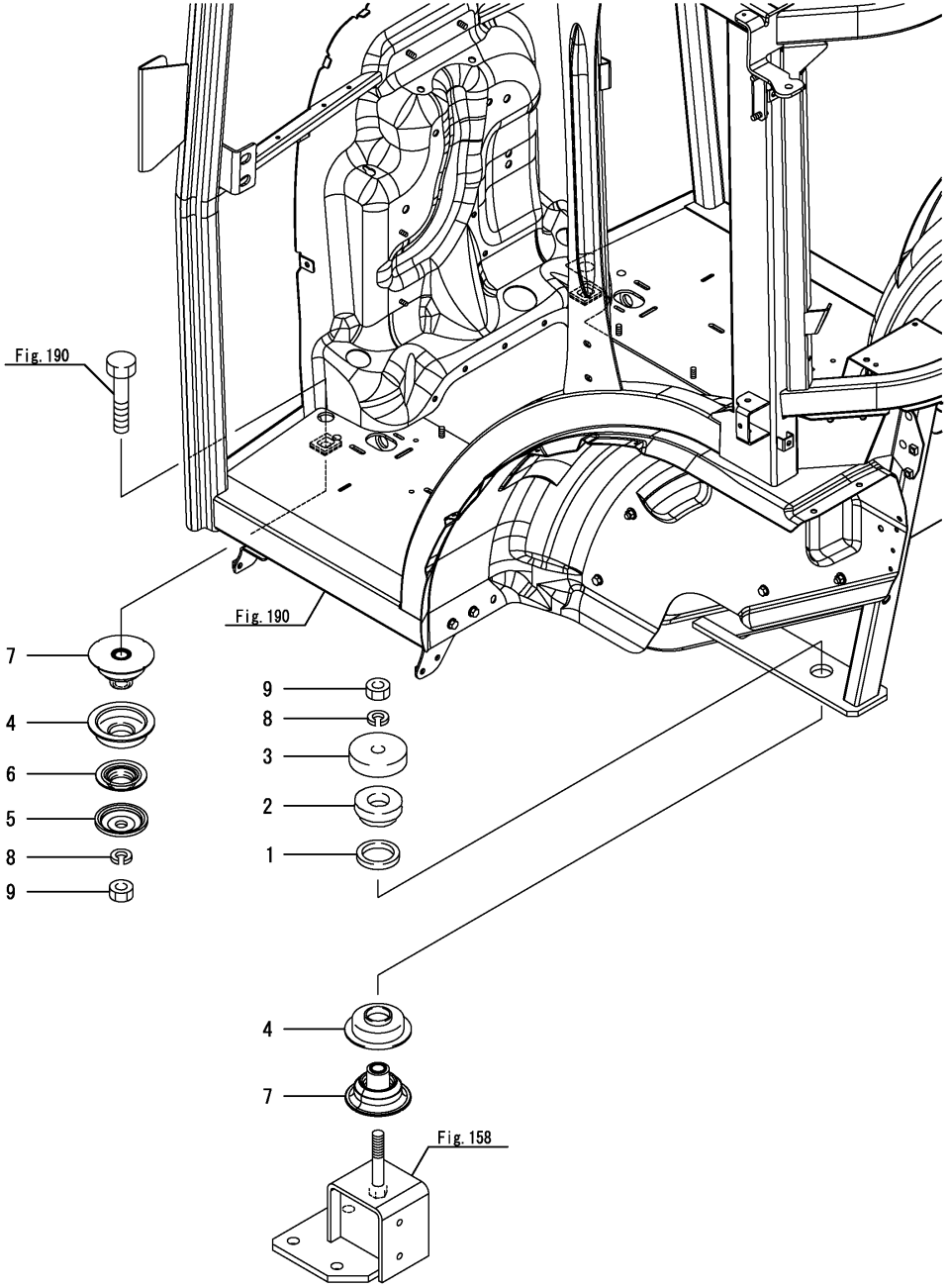

No.	Lev.	Parts No.	Description	Q'ty (A)	(B)	(C)	(D)	(E)	(F)	I	R
1	1	198072-62790	RUBBER, STOPPER	2	2	2	2				
2	1	198071-62800	MOUNT, UPPER	2	2	2	2				
3	1	198071-62890	STOPPER, U	2	2	2	2				
4	1	198071-62900	STOPPER, MOUNT	4	4	4	4				
5	1	198200-62910	STOPPER, U	2	2	2	2				
6	1	198200-62970	MOUNT, UPPER	2	2	2	2				
7	1	1A8110-62990	MOUNT, LOWER	4	4	4	4				
8	1	22217-140000	WASHER, SPRING 14	4	4	4	4				
9	1	26716-140002	NUT, M14	4	4	4	4				

N:Old $\frac{\text{Yes}}{\text{No}}$ New, Q:Old $\frac{\text{No}}{\text{Yes}}$ New, R:Old $\frac{\text{Yes}}{\text{Yes}}$ New, S:Old $\frac{\text{No}}{\text{No}}$ New, W:Add, Z:Discontinued, F:Interchangeable by set, K:Q'ty Change

Copyright (C) 2014 YANMAR CO., LTD. All RightsReserved.

Fig.154. FLOOR ATTACHMENT(1)

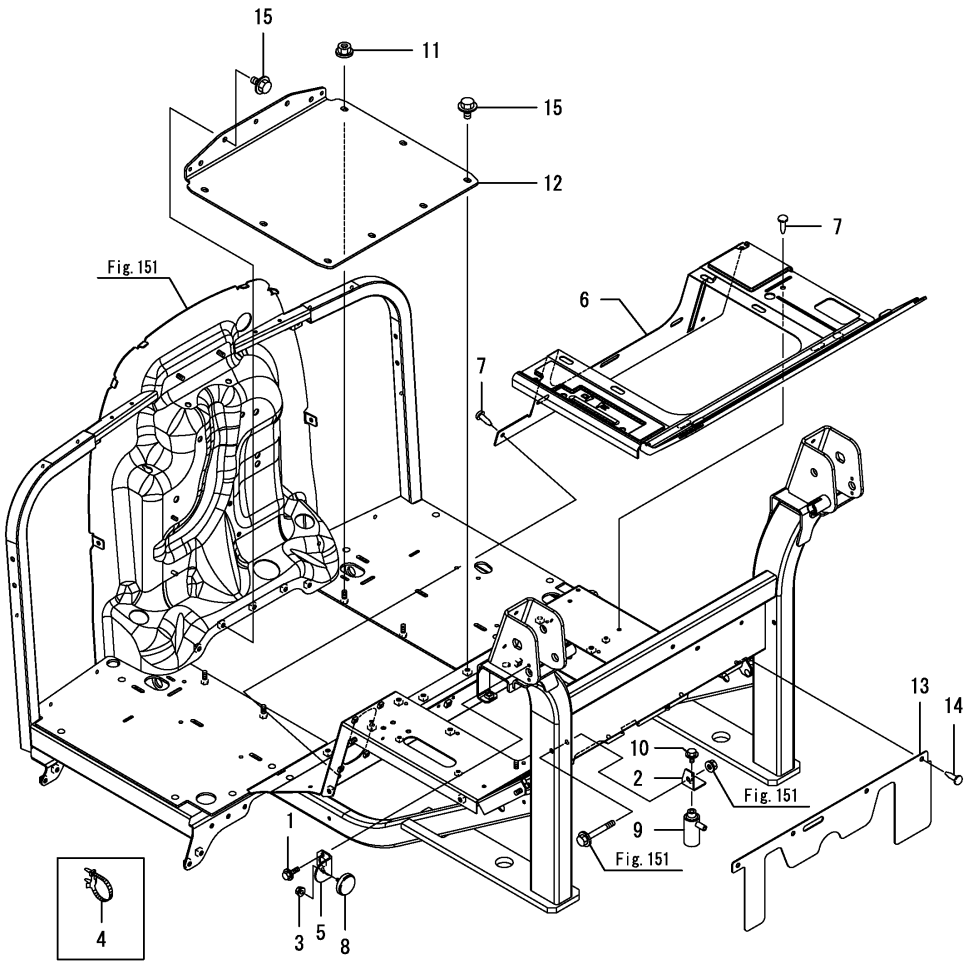

(A)=EG326Y (B)=EG328Y (C)=EG330Y (D)=EG334Y (E)= (F)=

No.	Lev.	Parts No.	Description	Q'ty (A)	(B)	(C)	(D)	(E)	(F)	I	R
1	1	1A7450-03170	BOLT, M6X10	4	4	4	4				
2	1	1A7180-04800	STAY, BREATHER	1	1	1	1				
3	1	194990-22120	NUT, M5	2	2	2	2				
4	1	194680-51670	BAND, CLIP	1	1	1	1				
5	1	1A7180-53400	STAY, REFRECTOR	2	2	2	2				
6	1	1A7180-62360	MAT, FLOOR B	1	1	1	1				
7	1	194697-62560	CAP, HOLE	9	9	9	9				
7-1	1	1A7210-84220	CAP, HOLE	9	9	9	9			N	
	(A=F090216)	(B=F080594)	(C=F070860) (D=F060746)								
8	1	1A6481-62650	REFLECTOR	2	2	2	2				
9	1	194205-63550	BREATHER, AIR	1	1	1	1				
10	1	26106-080102	BOLT, M8X 10 PLATED	1	1	1	1				
10-1	1	26106-080122	BOLT, M8X 12 PLATED	1	1	1	1			N	
	(A=F090101)	(B=F080101)	(C=F070101) (D=F060101)								
11	1	194990-22140	NUT, M8	4	4	4	4				
12	1	1A7180-62300	PLATE, FLOOR CENTER	1	1	1	1				
13	1	1A7180-62310	COVER, DUST REAR	1	1	1	1				
14	1	1E6760-74150	CAP, HOLE 8	4	4	4	4				
15	1	26106-080162	BOLT, M8X 16 PLATED	9	9	9	9				

N:Old $\overset{\text{Yes}}{\underset{\text{No}}{\leftrightarrows}}$ New, Q:Old $\overset{\text{No}}{\underset{\text{Yes}}{\leftrightarrows}}$ New, R:Old $\overset{\text{Yes}}{\underset{\text{Yes}}{\leftrightarrows}}$ New, S:Old $\overset{\text{No}}{\underset{\text{No}}{\leftrightarrows}}$ New, W:Add, Z:Discontinued, F:Interchangeable by set, K:Q'ty Change

Copyright (C) 2014 YANMAR CO., LTD. All RightsReserved.

Fig.257. FLOOR ATTACHMENT(1)(A,K,KW,KWA)

(A)=EG326Y (D)=EG334Y
(B)=EG328Y (E)=
(C)=EG330Y (F)=

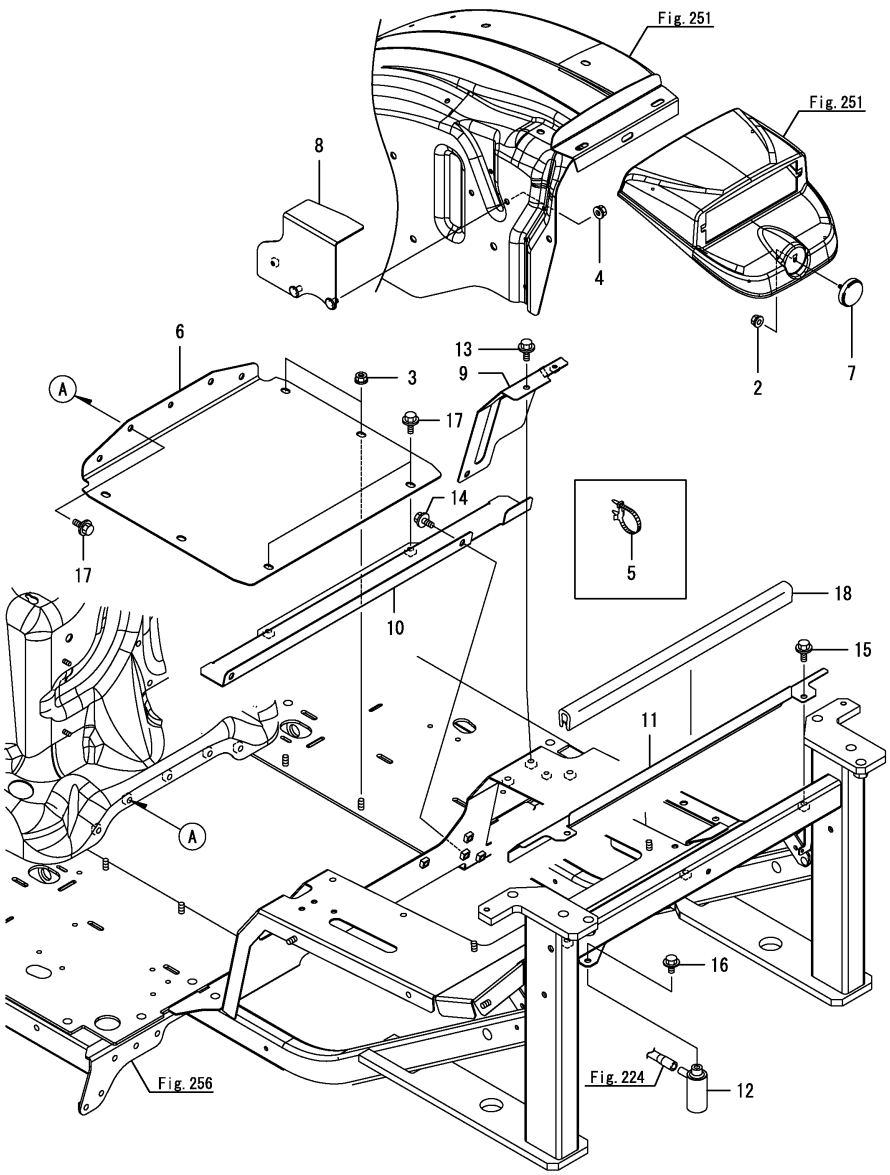

No.	Lev.	Parts No.	Description	Q'ty (A)	(B)	(C)	(D)	(E)	(F)	I	R
2	1	194990-22120	NUT, M5			2	2				
3	1	194990-22140	NUT, M8			4	4				
4	1	194990-22140	NUT, M8			2	2				
5	1	194680-51670	BAND, CLIP			1	1				
6	1	1A7160-62300	PLATE, FLOOR-CENTER			1	1				
7	1	1A6481-62650	REFLECTOR			2	2				
8	1	1A7160-62750	COVER ASSY, A HARNE			1	1				
9	1	1A7160-62800	COVER ASSY, B HARNE			1	1				
10	1	1A7160-62820	COVER,C HARNE CMP			1	1				
10-1	1	1A7160-62821	COVER,C HARNE CMP (C=F070945) (D=F060918)			1	1			N	
11	1	1A7160-62880	COVER, D HARNE			1	1				
12	1	194205-63550	BREATHER, AIR			1	1				
13	1	198460-83350	BOLT, M8X16			2	2				
14	1	198460-83350	BOLT, M8X16			2	2				
15	1	198460-83350	BOLT, M8X16			2	2				
16	1	26106-080122	BOLT, M8X 12 PLATED			1	1				
17	1	26106-080162	BOLT, M8X 16 PLATED			7	7				
18	1	1A7260-64450	TRIM, 470			1	1				

Remarks
* Applied to the following models.
EG330A, EG330K, EG330KW, EG334A, EG334KW, EG334KWA

N:Old $\frac{\text{Yes}}{\text{No}}$ New, Q:Old $\frac{\text{No}}{\text{Yes}}$ New, R:Old $\frac{\text{Yes}}{\text{Yes}}$ New, S:Old $\frac{\text{No}}{\text{No}}$ New, W:Add, Z:Discontinued, F:Interchangeable by set, K:Q'ty Change

Copyright (C) 2014 YANMAR CO., LTD. All RightsReserved.

Fig.155. FLOOR ATTACHMENT(2)

(A)=EG326Y (D)=EG334Y
(B)=EG328Y (E)=
(C)=EG330Y (F)=

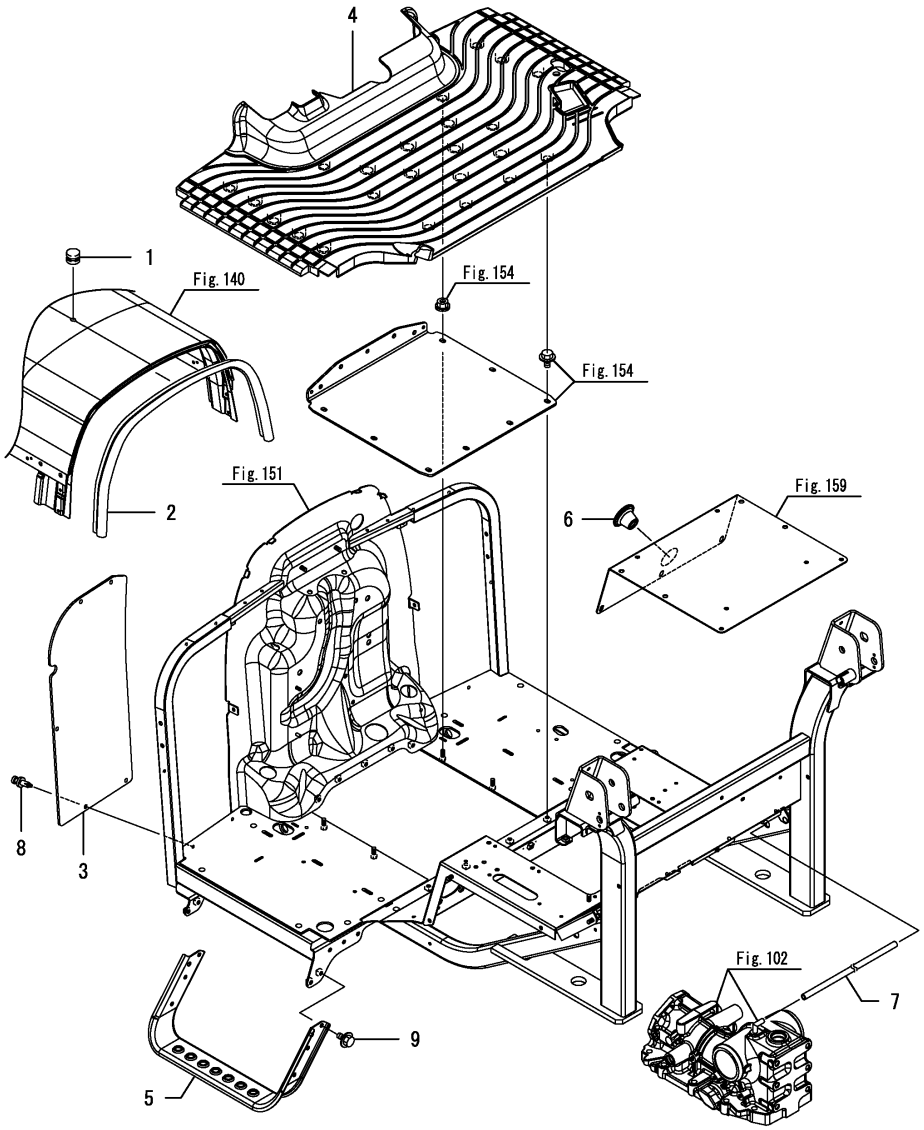

No.	Lev.	Parts No.	Description	Q'ty (A)	(B)	(C)	(D)	(E)	(F)	I	R
1	1	194197-56350	GROMMET	1	1	1	1				
2	1	1A7180-60760	WEATHER-STRIP	1	1	1	1				
3	1	1A7260-62310	GUARD, DUST	2	2	2	2				
4	1	1A7180-62350	MAT, FLOOR A	1	1	1	1				
5	1	1A7210-62560	STEP, SUB	2	2	2	2				
6	1	198208-62920	BOOT, LEVER	1	1	1	1				
7	1	194640-63560	PIPE, AIR BREATHER	1	1	1	1				
8	1	197810-84840	RIVET, NYLON	10	10	10	10				
9	1	26106-080162	BOLT, M8X 16 PLATED	8	8	8	8				

N:Old $\frac{\text{Yes}}{\text{No}}$ New, Q:Old $\frac{\text{No}}{\text{Yes}}$ New, R:Old $\frac{\text{Yes}}{\text{Yes}}$ New, S:Old $\frac{\text{No}}{\text{No}}$ New, W:Add, Z:Discontinued, F:Interchangeable by set, K:Q'ty Change

Copyright (C) 2014 YANMAR CO., LTD. All RightsReserved.

Fig.258. FLOOR ATTACHMENT(2)(A,K,KW,KWA)

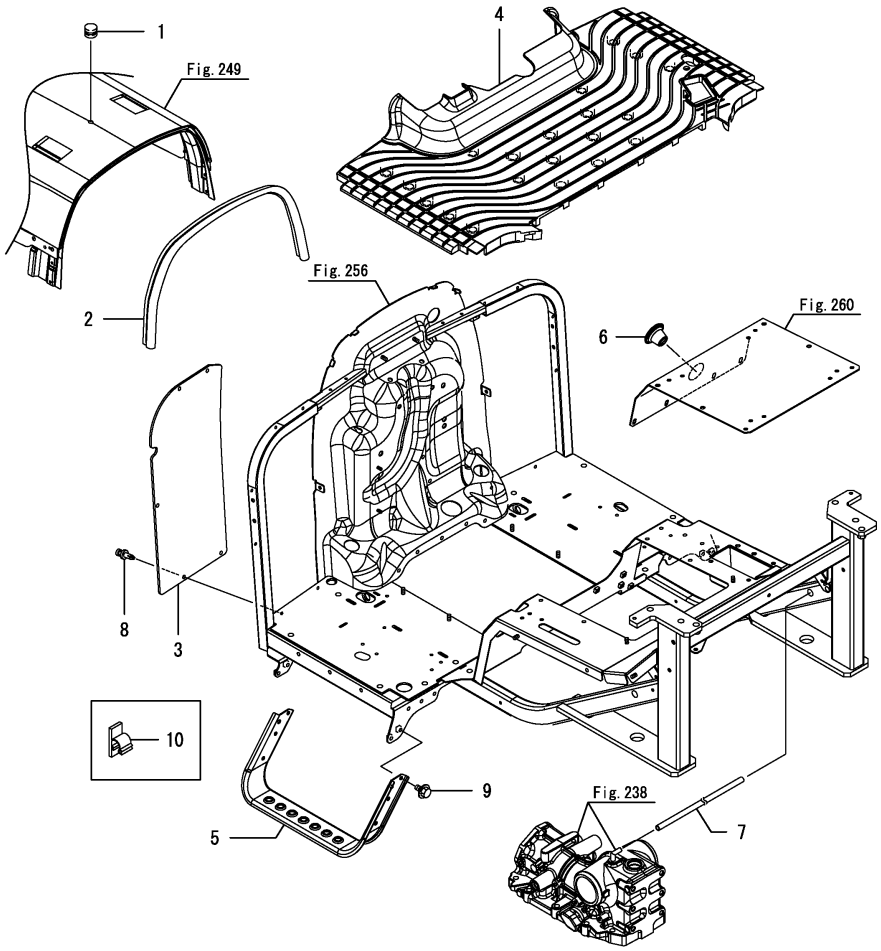

(A)=EG326Y (D)=EG334Y
(B)=EG328Y (E)=
(C)=EG330Y (F)=

No.	Lev.	Parts No.	Description	Q'ty (A)	(B)	(C)	(D)	(E)	(F)	I	R
1	1	194197-56350	GROMMET			1	1				
2	1	1A7180-60760	WEATHER-STRIP			1	1				
3	1	1A7260-62310	GUARD, DUST			2	2				
4	1	1A7160-62350	MAT, A FLOOR			1	1				
5	1	1A7210-62560	STEP, SUB			2	2				
6	1	198208-62920	BOOT, LEVER			1	1				
7	1	194640-63560	PIPE, AIR BREATHER			1	1				
8	1	197810-84840	RIVET, NYLON			10	10				
9	1	26106-080162	BOLT, M8X 16 PLATED			8	8				
10	1	172010-07810	STICKER, WIRE			1	1			W	
			(C=F070945) (D=F060918)								

Remarks
* Applied to the following models.
EG330A, EG330K, EG330KW, EG334A, EG334KW, EG334KWA

N:Old $\frac{\text{Yes}}{\text{No}}$ New, Q:Old $\frac{\text{No}}{\text{Yes}}$ New, R:Old $\frac{\text{Yes}}{\text{Yes}}$ New, S:Old $\frac{\text{No}}{\text{No}}$ New, W:Add, Z:Discontinued, F:Interchangeable by set, K:Q'ty Change

Copyright (C) 2014 YANMAR CO., LTD. All RightsReserved.

Fig.156. CABIN ATTACHMENT(1)

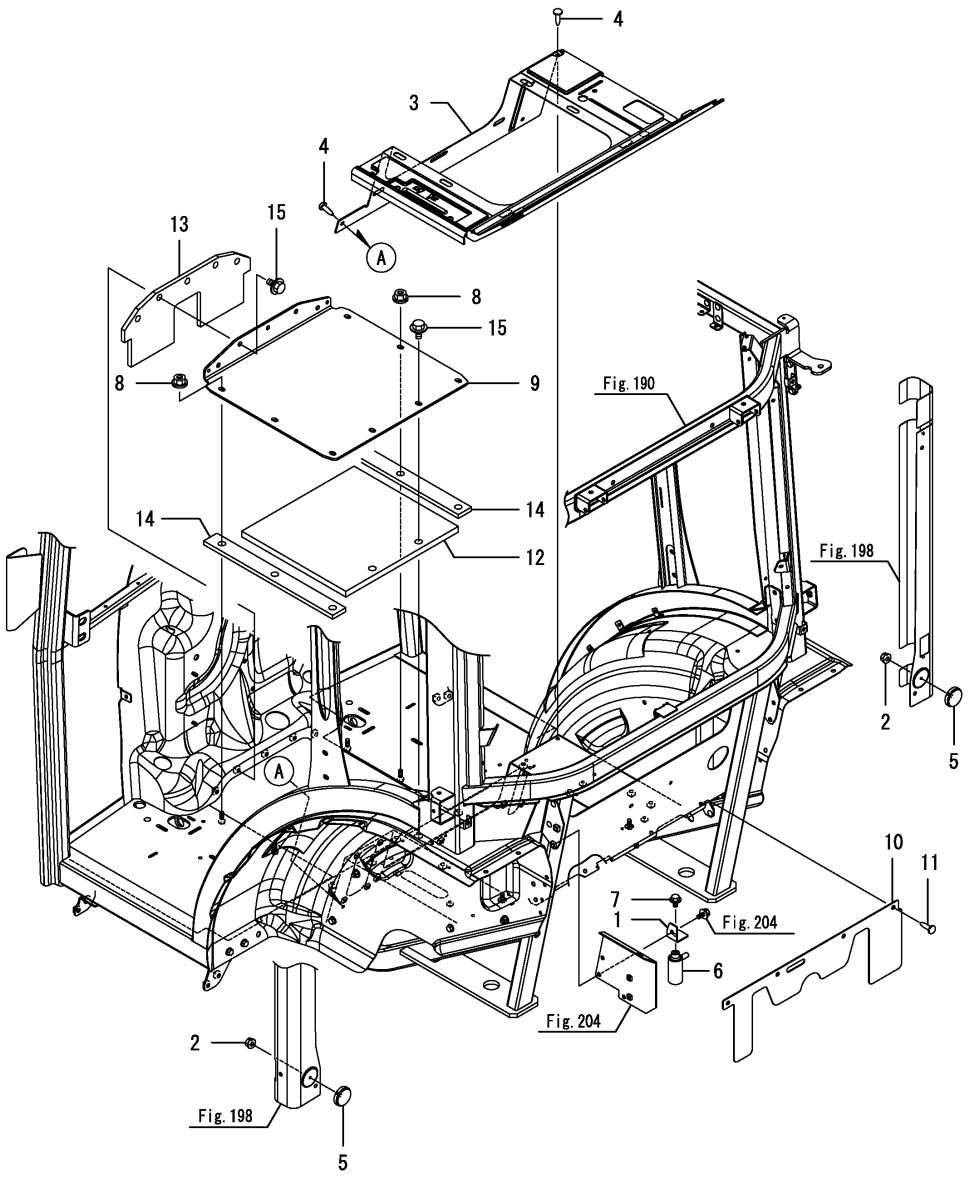

(A)=EG326Y (D)=EG334Y
(B)=EG328Y (E)=
(C)=EG330Y (F)=

No.	Lev.	Parts No.	Description	Q'ty (A)	(B)	(C)	(D)	(E)	(F)	I	R
1	1	1A7180-04800	STAY, BREATHER	1	1	1	1				
2	1	194990-22120	NUT, M5	2	2	2	2				
3	1	1A7180-62360	MAT, FLOOR B	1	1	1	1				
4	1	194697-62560	CAP, HOLE	9	9	9	9				
4-1	1	1A7210-84220	CAP, HOLE	9	9	9	9			N	
	(A=F090216)	(B=F080594)	(C=F070860) (D=F060746)								
5	1	1A6481-62650	REFLECTOR	2	2	2	2				
6	1	194205-63550	BREATHER, AIR	1	1	1	1				
7	1	26106-080102	BOLT, M8X 10 PLATED	1	1	1	1				
8	1	194990-22140	NUT, M8	4	4	4	4				
9	1	1A7180-62300	PLATE, FLOOR CENTER	1	1	1	1				
10	1	1A7180-62310	COVER, DUST REAR	1	1	1	1				
11	1	1E6760-74150	CAP, HOLE 8	4	4	4	4				
12	1	1A7210-84711	SEAL	1	1	1	1				
12-1	1	1A7210-84712	SEAL, FLOOR CENTER	1	1	1	1			N	
	(A=F100105)	(B=F200090)	(C=F300349) (D=F400361)								
13	1	1A7210-84870	SEAL, FLOOR PLATE A	1	1	1	1				
14	1	1A7210-84880	SEAL, FLOOR PLATE B	2	2	2	2				
15	1	26106-080162	BOLT, M8X 16 PLATED	9	9	9	9				

N:Old $\frac{\text{Yes}}{\text{No}}$ New, Q:Old $\frac{\text{No}}{\text{Yes}}$ New, R:Old $\frac{\text{Yes}}{\text{Yes}}$ New, S:Old $\frac{\text{No}}{\text{No}}$ New, W:Add, Z:Discontinued, F:Interchangeable by set, K:Q'ty Change

Copyright (C) 2014 YANMAR CO., LTD. All RightsReserved.

Fig.157. CABIN ATTACHMENT(2)

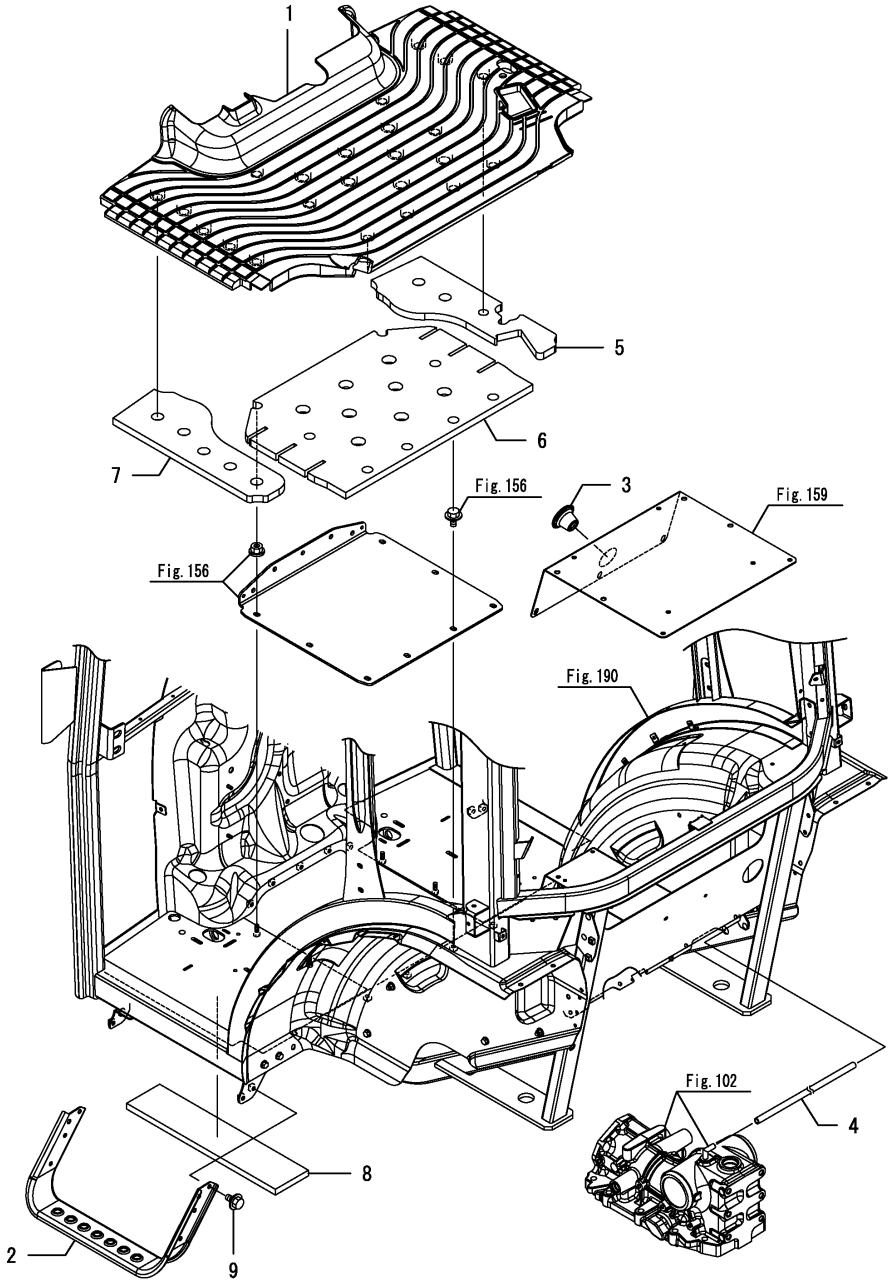

(A)=EG326Y (D)=EG334Y
(B)=EG328Y (E)=
(C)=EG330Y (F)=

No.	Lev.	Parts No.	Description	Q'ty (A)	(B)	(C)	(D)	(E)	(F)	I	R
1	1	1A7180-62350	MAT, FLOOR A	1	1	1	1				
2	1	1A7210-62560	STEP, SUB	2	2	2	2				
3	1	198208-62920	BOOT, LEVER	1	1	1	1				
4	1	194640-63560	PIPE, AIR BREATHER	1	1	1	1				
5	1	1A7210-84310	ACOUSTIC ABSORBENT	1	1	1	1				
6	1	1A7210-84320	ACOUSTIC ABSORBENT	1	1	1	1				
7	1	1A7210-84330	ACOUSTIC ABSORBENT	1	1	1	1				
8	1	1A7210-84810	ACOUSTIC ABSORBENT	2	2	2	2			Z	
	(A=F090153)	(B=F080149)	(C=F070259) (D=F060254)								
9	1	26106-080162	BOLT, M8X 16 PLATED	8	8	8	8				

N:Old $\frac{\text{Yes}}{\text{No}}$ New, Q:Old $\frac{\text{No}}{\text{Yes}}$ New, R:Old $\frac{\text{Yes}}{\text{Yes}}$ New, S:Old $\frac{\text{No}}{\text{No}}$ New, W:Add, Z:Discontinued, F:Interchangeable by set, K:Q'ty Change

Copyright (C) 2014 YANMAR CO., LTD. All RightsReserved.

Fig.294. CABIN ATTACHMENT(2) (SIMPLE)

(A)=EG326Y
(B)=EG328Y
(C)=EG330Y
(D)=EG334Y
(E)=
(F)=

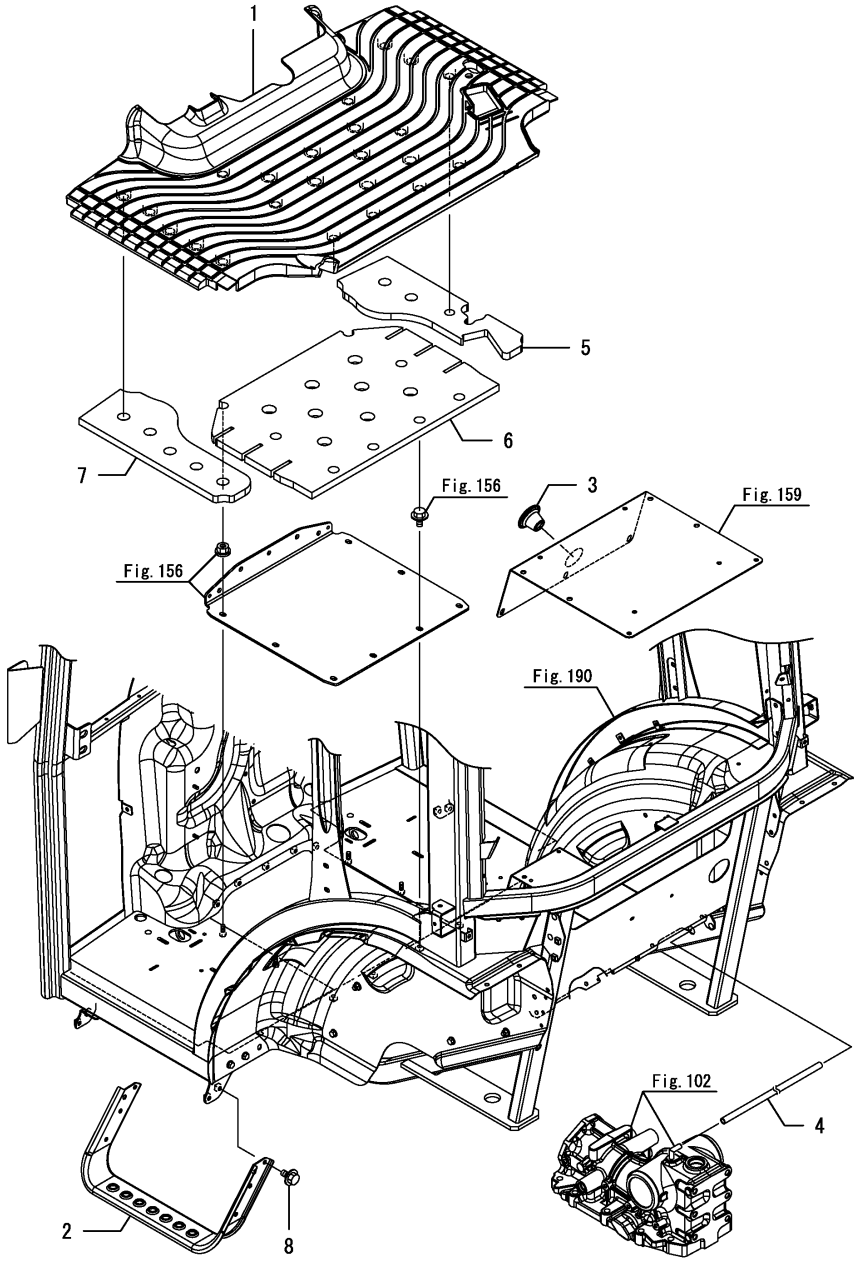

No.	Lev.	Parts No.	Description	Q'ty (A)	(B)	(C)	(D)	(E)	(F)	I	R
1	1	1A7180-62350	MAT, FLOOR A				1				
2	1	1A7210-62560	STEP, SUB				1				
3	1	198208-62920	BOOT, LEVER				1				
4	1	194640-63560	PIPE, AIR BREATHER				1				
5	1	1A7210-84310	ACOUSTIC ABSORBENT				1				
6	1	1A7210-84320	ACOUSTIC ABSORBENT				1				
7	1	1A7210-84330	ACOUSTIC ABSORBENT				1				
8	1	26106-080162	BOLT, M8X 16 PLATED				4				

N:Old $\xleftarrow[\text{No}]{\text{Yes}}$ New, Q:Old $\xleftarrow[\text{Yes}]{\text{No}}$ New, R:Old $\xleftarrow[\text{Yes}]{\text{Yes}}$ New, S:Old $\xleftarrow[\text{No}]{\text{No}}$ New, W:Add, Z:Discontinued, F:Interchangeable by set, K:Q'ty Change

Copyright (C) 2014 YANMAR CO., LTD. All RightsReserved.

Fig.158. FLOOR BRACKET

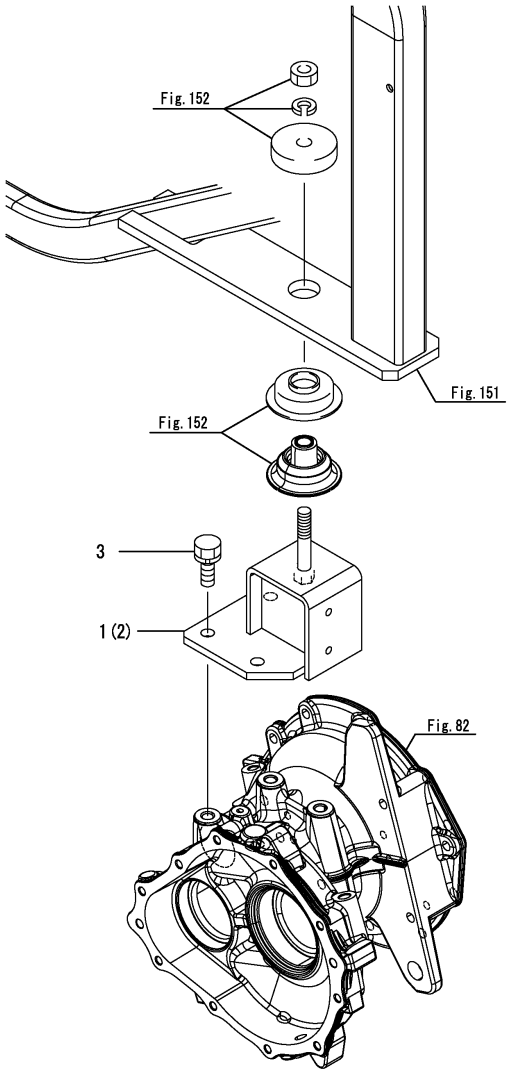

(A)=EG326Y (D)=EG334Y
(B)=EG328Y (E)=
(C)=EG330Y (F)=

No.	Lev.	Parts No.	Description	Q'ty (A)	(B)	(C)	(D)	(E)	(F)	I	R
1	1	1A7180-62920	STAY ASSY, MOUNT L	1	1	1	1				
2	1	1A7180-62930	STAY ASSY, MOUNT R	1	1	1	1				
3	1	26013-140352	BOLT, M14X 35	6	6	6	6				

Remarks
* Applied to the following models.
EG326, EG328, EG330, EG334
EG330A(Cabin specification), EG334A(Cabin specification)

N:Old $\xleftrightarrow[\text{No}]{\text{Yes}}$ New, Q:Old $\xleftrightarrow[\text{Yes}]{\text{No}}$ New, R:Old $\xleftrightarrow[\text{Yes}]{\text{Yes}}$ New, S:Old $\xleftrightarrow[\text{No}]{\text{No}}$ New, W:Add, Z:Discontinued, F:Interchangeable by set, K:Q'ty Change

Copyright (C) 2014 YANMAR CO., LTD. All RightsReserved.

Fig.259. FLOOR BRACKET (A,K,KW,KWA)

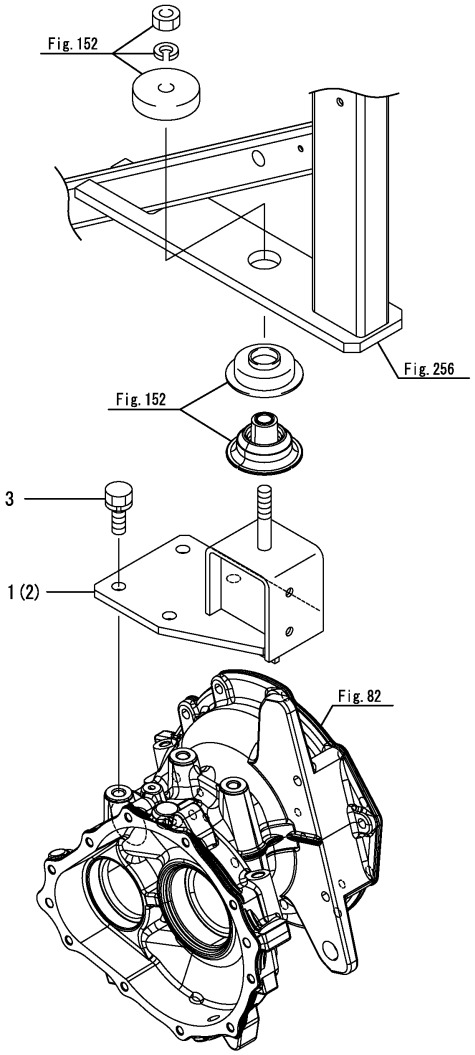

(A)=EG326Y (D)=EG334Y
(B)=EG328Y (E)=
(C)=EG330Y (F)=

No.	Lev.	Parts No.	Description	Q'ty (A)	(B)	(C)	(D)	(E)	(F)	I	R
1	1	1A7160-62920	MOUNT ASSY, REAR L			1	1				
2	1	1A7160-62930	MOUNT ASSY, REAR R			1	1				
3	1	26013-140352	BOLT, M14X 35			8	8				

Remarks
* Applied to the following models.
EG330A(Rops specification), EG330K, EG330KW, EG334A(Rops specification), EG334KW, EG334KWA

N:Old ◄Yes/No► New, Q:Old ◄No/Yes► New, R:Old ◄Yes/Yes► New, S:Old ◄No/No► New, W:Add, Z:Discontinued, F:Interchangeable by set, K:Q'ty Change

Copyright (C) 2014 YANMAR CO., LTD. All RightsReserved.

Fig.159. SEAT

(A)=EG326Y
(B)=EG328Y
(C)=EG330Y
(D)=EG334Y
(E)=
(F)=

No.	Lev.	Parts No.	Description	Q'ty (A)	(B)	(C)	(D)	(E)	(F)	I	R
1	1	194990-22140	NUT, M8	2	2	2	2				
2	1	198072-60590	BOLT, M6X20	2	2	2	2				
3	1	1A7140-62841	COVER, DUCT B	1	1	1	1				
4	1	1A7180-63110	SEAT ASSY	1	1	1	1				
5	1	1A7140-63130	RAIL ASSY, SEAT R	1	1	1	1				
6	1	1A7140-63160	RAIL ASSY, SEAT R	1	1	1	1				
7	1	1A7140-63211	BRACKET, SEAT	1	1	1	1				
8	1	1A7640-63220	PIN, HINGE	1	1	1	1				
9	1	1A7140-63240	STAY ASSY, SEAT R	1	1	1	1				
10	1	198460-83350	BOLT, M8X16	7	7	7	7				
11	1	22372-100000	PIN, SNAP 10	2	2	2	2				
12	1	26106-080162	BOLT, M8X 16 PLATED	4	4	4	4				
13	1	26716-080002	NUT, M8	6	6	6	6				

Remarks
* Applied to the following models.
EG326, EG328, EG330, EG334
EG330A(Cabin specification), EG334A(Cabin specification)

N:Old $\frac{\text{Yes}}{\text{No}}$ New, Q:Old $\frac{\text{No}}{\text{Yes}}$ New, R:Old $\frac{\text{Yes}}{\text{Yes}}$ New, S:Old $\frac{\text{No}}{\text{No}}$ New, W:Add, Z:Discontinued, F:Interchangeable by set, K:Q'ty Change

Copyright (C) 2014 YANMAR CO., LTD. All RightsReserved.

Fig.160. SEAT(HIGH SPEED)

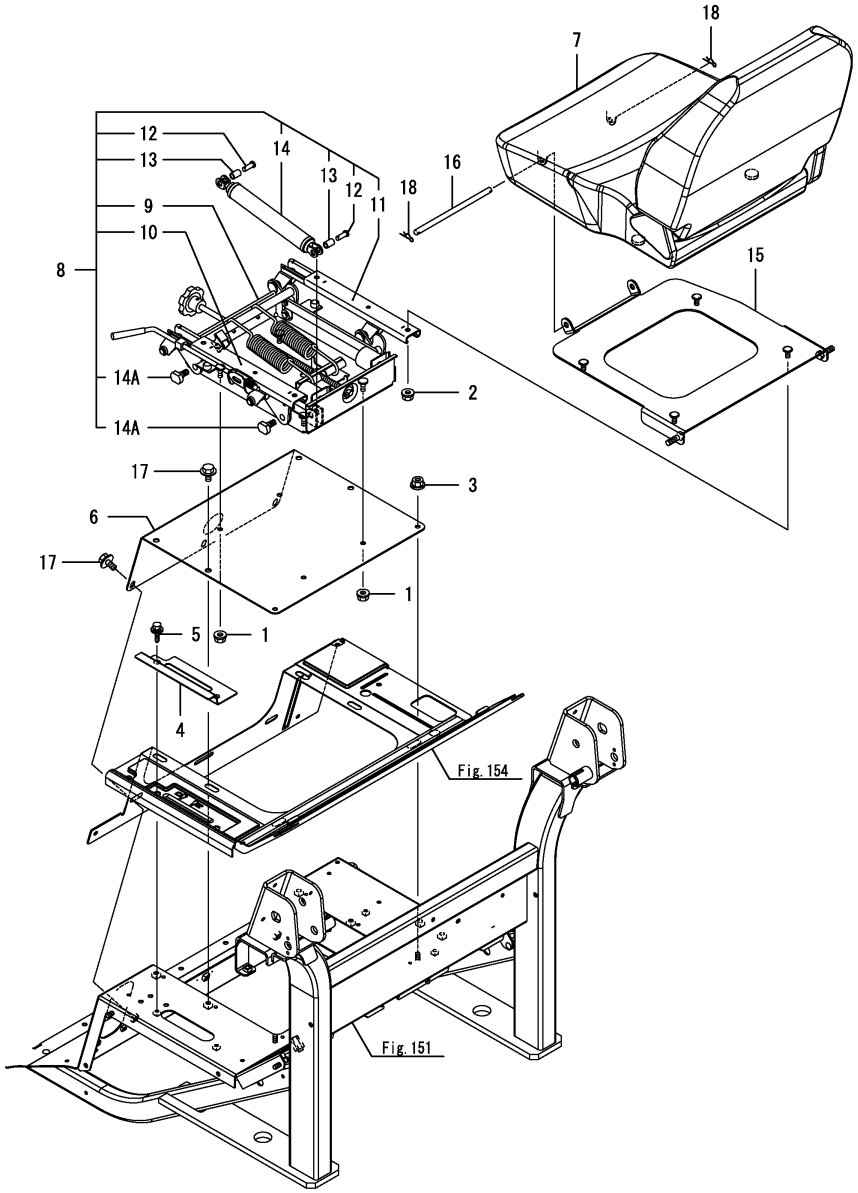

(A)=EG326Y (D)=EG334Y
(B)=EG328Y (E)=
(C)=EG330Y (F)=

No.	Lev.	Parts No.	Description	Q'ty (A)	(B)	(C)	(D)	(E)	(F)	I	R
1	1	194990-22140	NUT, M8	4	4	4	4				
2	1	194990-22140	NUT, M8	4	4	4	4				
3	1	194990-22140	NUT, M8	2	2	2	2				
4	1	1A7180-27610	GUIDE, LEVER	1	1	1	1				
5	1	198072-60590	BOLT, M6X20	2	2	2	2				
6	1	1A7180-62841	COVER, DUCT B	1	1	1	1				
7	1	1A7180-63110	SEAT ASSY	1	1	1	1				
8	1	1A7600-63151	SUSPENSION ASSY,SEAT	1	1	1	1				
9	2	1A7600-63160	BODY, SUSPENSION	1	1	1	1				
10	2	1A7640-63170	RAIL ASSY, SEAT L	1	1	1	1				
11	2	1A7640-63180	RAIL ASSY, SEAT R	1	1	1	1				
12	2	1A7600-63190	PIN, DAMPER	2	2	2	2				
13	2	1A7600-63210	COLLAR	2	2	2	2				
14	2	198463-63360	DAMPER, SEAT	1	1	1	1				
14A	2	1A7640-63190	BOLT, HINGE	4	4	4	4			W	
	(A=F090710)	(B=F080597)	(C=F070947) (D=F061533)								
15	1	1A7180-63200	BRACKET, SEAT	1	1	1	1				
16	1	1A7640-63220	PIN, HINGE	1	1	1	1				
17	1	198460-83350	BOLT, M8X16	7	7	7	7				
18	1	22372-100000	PIN, SNAP 10	2	2	2	2				

Remarks
* Applied to the following models.
EG326, EG328, EG330, EG334, EG334A

N:Old $\frac{\text{Yes}}{\text{No}}$ New, Q:Old $\frac{\text{No}}{\text{Yes}}$ New, R:Old $\frac{\text{Yes}}{\text{Yes}}$ New, S:Old $\frac{\text{No}}{\text{No}}$ New, W:Add, Z:Discontinued, F:Interchangeable by set, K:Q'ty Change

Copyright (C) 2014 YANMAR CO., LTD. All RightsReserved.

Fig.260. SEAT(K,KW,KWA)

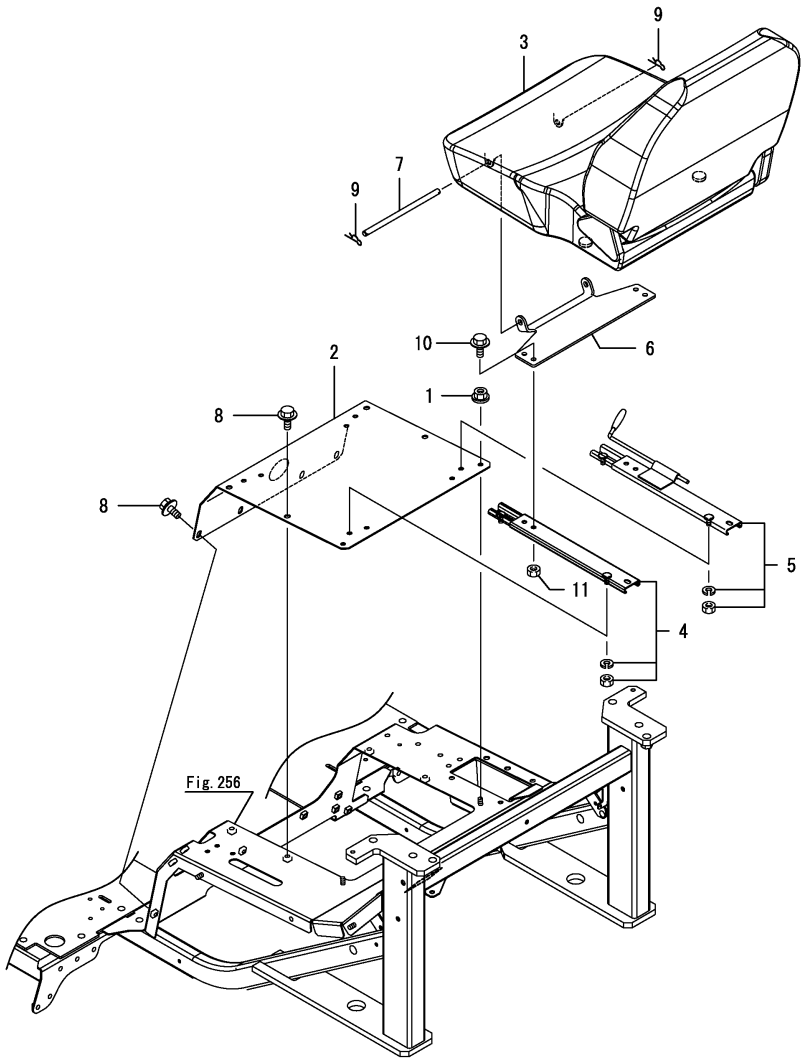

(A)=EG326Y (D)=EG334Y
(B)=EG328Y (E)=
(C)=EG330Y (F)=

No.	Lev.	Parts No.	Description	Q'ty (A)	(B)	(C)	(D)	(E)	(F)	I	R
1	1	194990-22140	NUT, M8			2	2				
2	1	1A7160-62841	COVER, DUST B			1	1				
3	1	1A7180-63110	SEAT ASSY			1	1				
4	1	1A7140-63130	RAIL ASSY, SEAT R			1	1				
5	1	1A7140-63160	RAIL ASSY, SEAT R			1	1				
6	1	1A7160-63210	BRACKET, F SEAT			1	1				
7	1	1A7640-63220	PIN, HINGE			1	1				
8	1	198460-83350	BOLT, M8X16			8	8				
9	1	22372-100000	PIN, SNAP 10			2	2				
10	1	26106-080162	BOLT, M8X 16 PLATED			4	4				
11	1	26716-080002	NUT, M8			4	4				

Remarks
* Applied to the following models.
EG330K ,EG330KW, EG334KW, EG334KWA

N:Old ◄Yes/No► New, Q:Old ◄No/Yes► New, R:Old ◄Yes/Yes► New, S:Old ◄No/No► New, W:Add, Z:Discontinued, F:Interchangeable by set, K:Q'ty Change

Copyright (C) 2014 YANMAR CO., LTD. All RightsReserved.

Fig.261. SEAT(A)

(A)=EG326Y
(B)=EG328Y
(C)=EG330Y
(D)=EG334Y
(E)=
(F)=

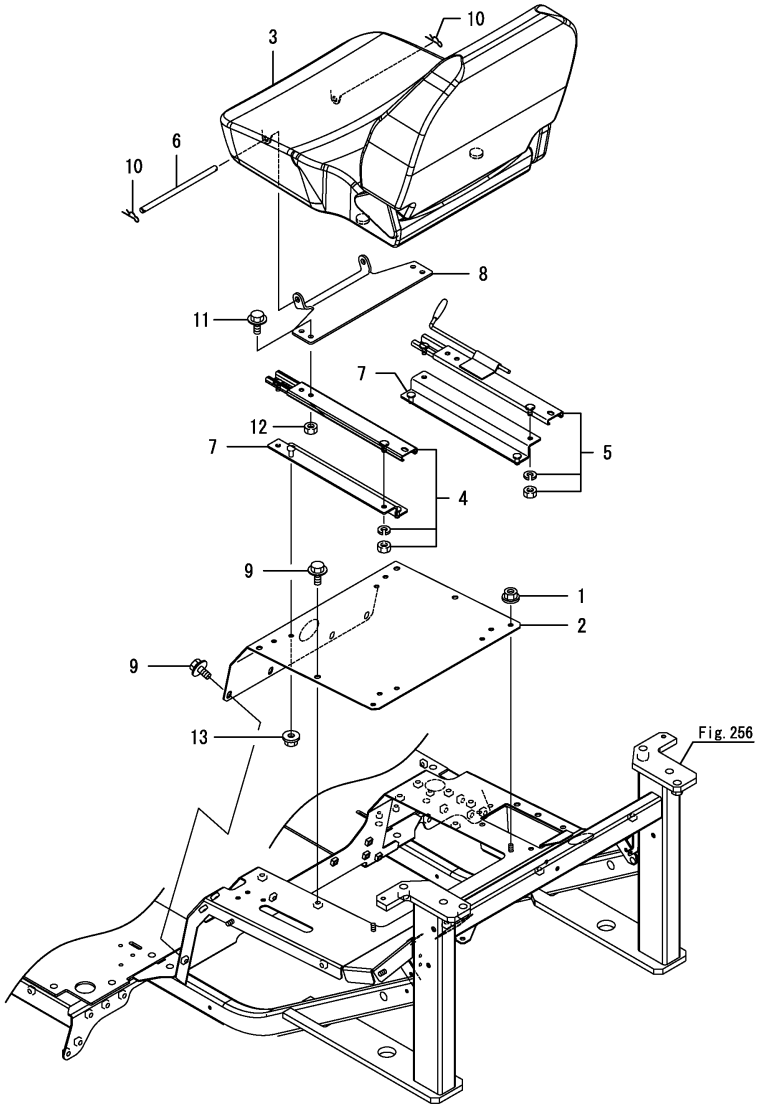

No.	Lev.	Parts No.	Description	Q'ty (A)	(B)	(C)	(D)	(E)	(F)	I	R
1	1	194990-22140	NUT, M8			2	2				
2	1	1A7160-62841	COVER, DUST B			1	1				
3	1	1A7180-63110	SEAT ASSY			1	1				
4	1	1A7140-63130	RAIL ASSY, SEAT R			1	1				
5	1	1A7140-63160	RAIL ASSY, SEAT R			1	1				
6	1	1A7640-63220	PIN, HINGE			1	1				
7	1	1A7160-63240	STAY ASSY, SEAT RAIL			2	2				
8	1	1A7160-63210	BRACKET, F SEAT			1	1				
9	1	198460-83350	BOLT, M8X16			8	8				
10	1	22372-100000	PIN, SNAP 10			2	2				
11	1	26106-080162	BOLT, M8X 16 PLATED			4	4				
12	1	26716-080002	NUT, M8			4	4				
13	1	194990-22140	NUT, M8			4	4				

Remarks
* Applied to the following models.
EG330A(Rops specification), EG334A(Rops specification)

N:Old $\xleftrightarrow[\text{No}]{\text{Yes}}$ New, Q:Old $\xleftrightarrow[\text{Yes}]{\text{No}}$ New, R:Old $\xleftrightarrow[\text{Yes}]{\text{Yes}}$ New, S:Old $\xleftrightarrow[\text{No}]{\text{No}}$ New, W:Add, Z:Discontinued, F:Interchangeable by set, K:Q'ty Change

Copyright (C) 2014 YANMAR CO., LTD. All RightsReserved.

Fig.161. SEAT BELT

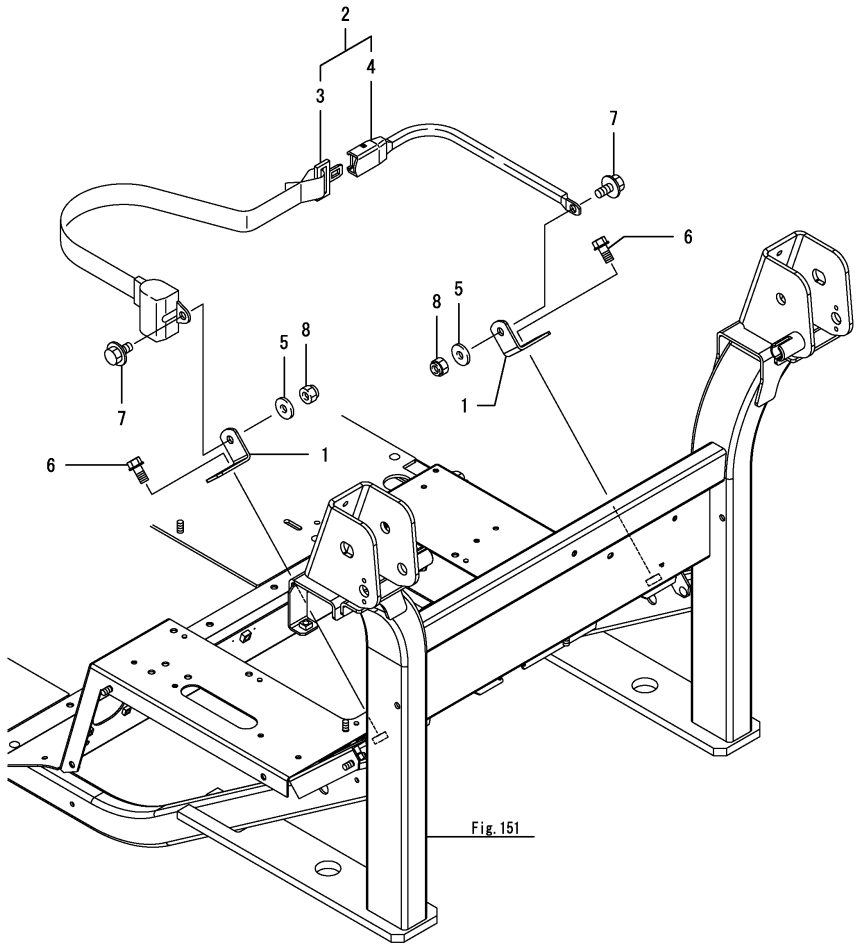

(A)=EG326Y (D)=EG334Y
(B)=EG328Y (E)=
(C)=EG330Y (F)=

No.	Lev.	Parts No.	Description	Q'ty (A)	(B)	(C)	(D)	(E)	(F)	I	R
1	1	1A7140-63350	STAY, SEAT BELT	2	2	2	2				
2	1	1A8160-63400	BELT ASSY, SEAT	1	1	1	1				
3	2	1A8160-63410	BELT ASSY, SEAT	1	1	1	1				
4	2	1A8160-63420	BELT ASSY, SEAT	1	1	1	1				
5	1	22137-100000	WASHER, 10	2	2	2	2				
6	1	26106-100202	BOLT, M10X 20 PLATED	2	2	2	2				
7	1	26106-100202	BOLT, M10X 20 PLATED	2	2	2	2				
8	1	26346-100002	NUT, M10	2	2	2	2				

Remarks
* Applied to the following models.
EG326, EG328, EG330, EG334
EG330A, EG330K, EG330KW, EG334A, EG334KW, EG334KWA

N:Old $\xleftrightarrow[\text{No}]{\text{Yes}}$ New, Q:Old $\xleftrightarrow[\text{Yes}]{\text{No}}$ New, R:Old $\xleftrightarrow[\text{Yes}]{\text{Yes}}$ New, S:Old $\xleftrightarrow[\text{No}]{\text{No}}$ New, W:Add, Z:Discontinued, F:Interchangeable by set, K:Q'ty Change

Copyright (C) 2014 YANMAR CO., LTD. All RightsReserved.

Fig.162. SEAT BELT(HIGH SPEED)

(A)=EG326Y
(B)=EG328Y
(C)=EG330Y
(D)=EG334Y
(E)=
(F)=

No.	Lev.	Parts No.	Description	Q'ty (A)	(B)	(C)	(D)	(E)	(F)	I	R
1	1	1A8160-63400	BELT ASSY, SEAT	1	1	1	1				
2	2	1A8160-63410	BELT ASSY, SEAT	1	1	1	1				
3	2	1A8160-63420	BELT ASSY, SEAT	1	1	1	1				
4	1	1A8160-63440	COLLAR, SEAT BELT	2	2	2	2				
5	1	22137-100000	WASHER, 10	2	2	2	2				
6	1	26346-100002	NUT, M10	2	2	2	2				

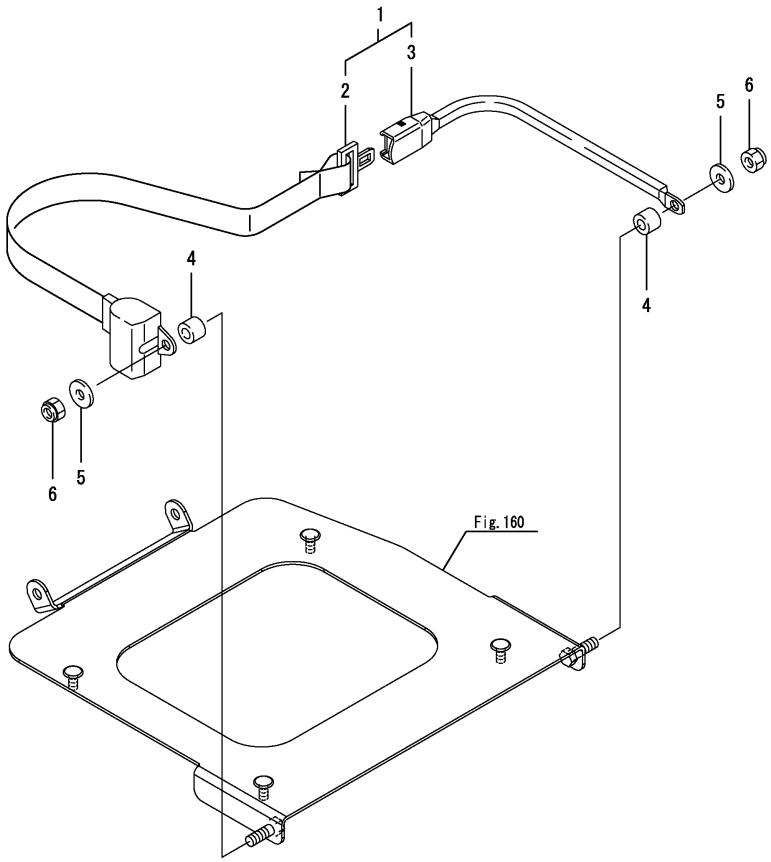

Remarks
* Applied to the following models.
EG326, EG328, EG330, EG334, EG334A

N:Old $\frac{\text{Yes}}{\text{No}}$ New, Q:Old $\frac{\text{No}}{\text{Yes}}$ New, R:Old $\frac{\text{Yes}}{\text{Yes}}$ New, S:Old $\frac{\text{No}}{\text{No}}$ New, W:Add, Z:Discontinued, F:Interchangeable by set, K:Q'ty Change

Copyright (C) 2014 YANMAR CO., LTD. All RightsReserved.

Fig.163. TOOL BOX

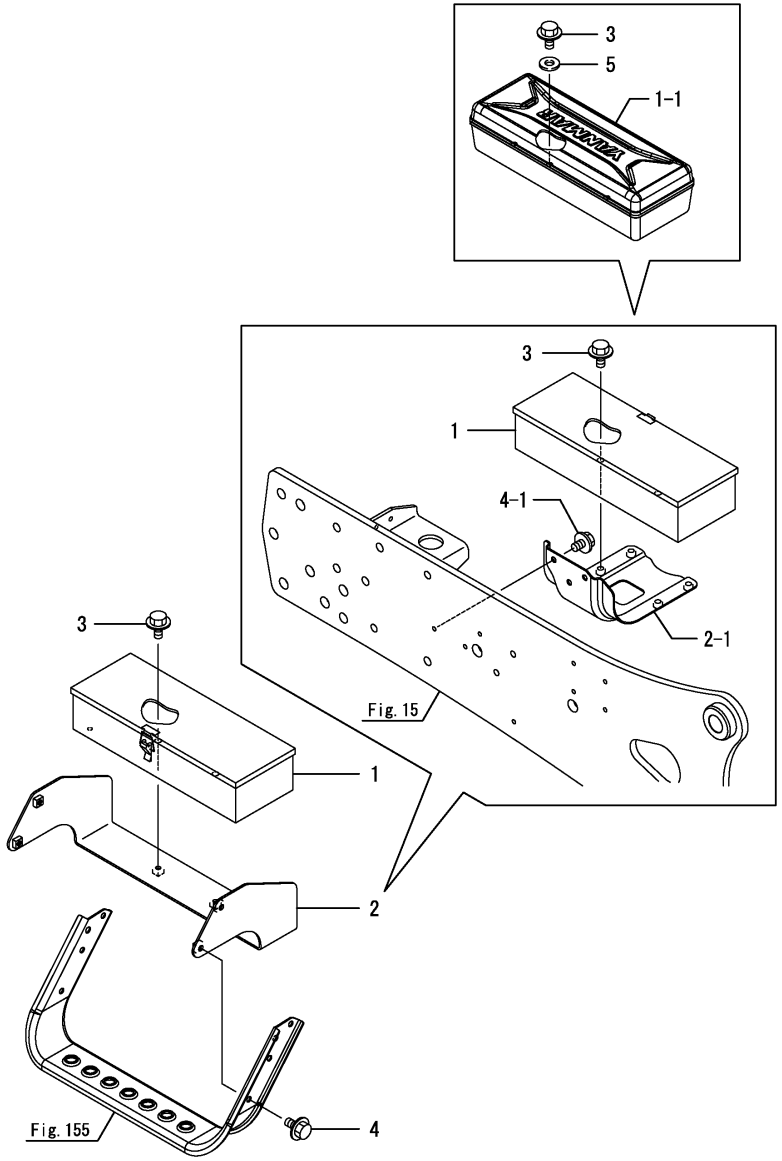

(A)=EG326Y (D)=EG334Y
(B)=EG328Y (E)=
(C)=EG330Y (F)=

No.	Lev.	Parts No.	Description	Q'ty (A)	(B)	(C)	(D)	(E)	(F)	I	R
1	1	198268-64810	BOX, TOOL	1	1	1	1				
1-1	1	1A7601-64810	TOOLBOX	1	1	1	1				R
	(A=F100131)	(B=F200118)	(C=F300456) (D=F400506)								
2	1	1A7180-92100	BRACKET ASSY	1	1	1	1				
2-1	1	1A7185-92100	BRACKET ASSY, T-BOX	1	1	1	1				S
	(A=F090576)	(B=F080470)	(C=F071221) (D=F061132)								
3	1	26106-080162	BOLT, M8X 16 PLATED	2	2	2	2				
4	1	26106-080162	BOLT, M8X 16 PLATED	4	4	4	4				
4-1	1	26106-080122	BOLT, M8X 12 PLATED	2	2	2	2				S
	(A=F090576)	(B=F080470)	(C=F071221) (D=F061132)								
5	1	22137-080000	WASHER, 8	2	2	2	2				W
	(A=F100131)	(B=F200118)	(C=F300456) (D=F400506)								

N:Old $\xleftrightarrow[\text{No}]{\text{Yes}}$ New, Q:Old $\xleftrightarrow[\text{Yes}]{\text{No}}$ New, R:Old $\xleftrightarrow[\text{Yes}]{\text{Yes}}$ New, S:Old $\xleftrightarrow[\text{No}]{\text{No}}$ New, W:Add, Z:Discontinued, F:Interchangeable by set, K:Q'ty Change

Copyright (C) 2014 YANMAR CO., LTD. All RightsReserved.

Fig.295. TOOL BOX(A,K,KW,KWA)

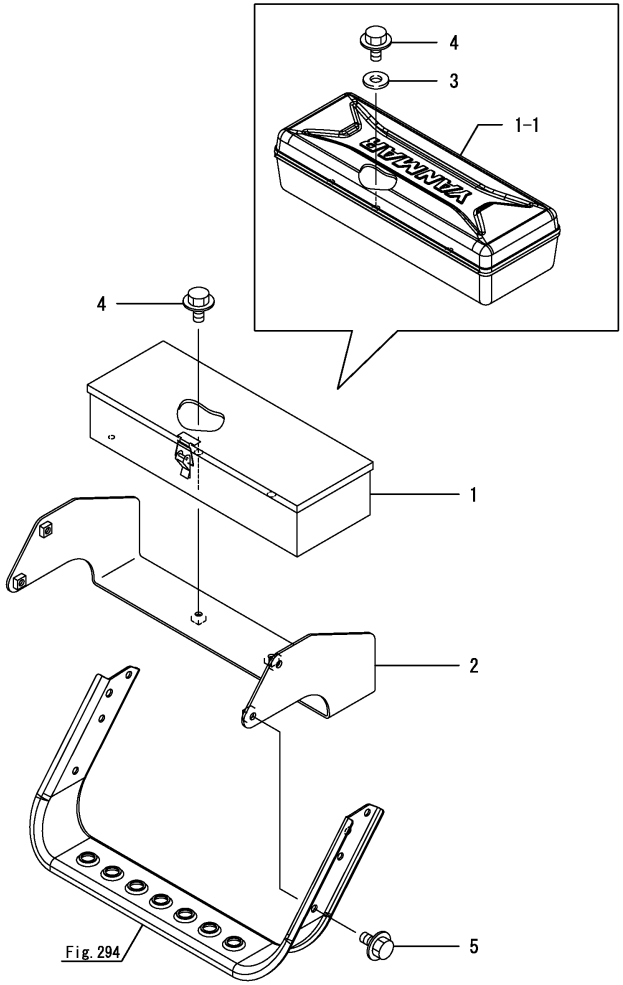

(A)=EG326Y (D)=EG334Y
(B)=EG328Y (E)=
(C)=EG330Y (F)=

No.	Lev.	Parts No.	Description	Q'ty (A)	(B)	(C)	(D)	(E)	(F)	I	R
1	1	198268-64810	BOX, TOOL			1	1				
1-1	1	1A7601-64810	TOOLBOX (C=F300456) (D=F400506)			1	1			R	
2	1	1A7180-92100	BRACKET ASSY			1	1				
3	1	22137-080000	WASHER, 8			2	2				
4	1	26106-080162	BOLT, M8X 16 PLATED			2	2				
5	1	26106-080162	BOLT, M8X 16 PLATED			4	4				

Remarks
* Applied to the following models.
EG330A(Rops specification), EG330K, EG330KW, EG334A(Rops specification), EG334KW, EG334KWA

N:Old $\overset{\text{Yes}}{\underset{\text{No}}{\leftrightarrow}}$ New, Q:Old $\overset{\text{No}}{\underset{\text{Yes}}{\leftrightarrow}}$ New, R:Old $\overset{\text{Yes}}{\underset{\text{Yes}}{\leftrightarrow}}$ New, S:Old $\overset{\text{No}}{\underset{\text{No}}{\leftrightarrow}}$ New, W:Add, Z:Discontinued, F:Interchangeable by set, K:Q'ty Change

Copyright (C) 2014 YANMAR CO., LTD. All RightsReserved.

Fig.164. REARVIEW MIRROR

(A)=EG326Y
(B)=EG328Y
(C)=EG330Y
(D)=EG334Y
(E)=
(F)=

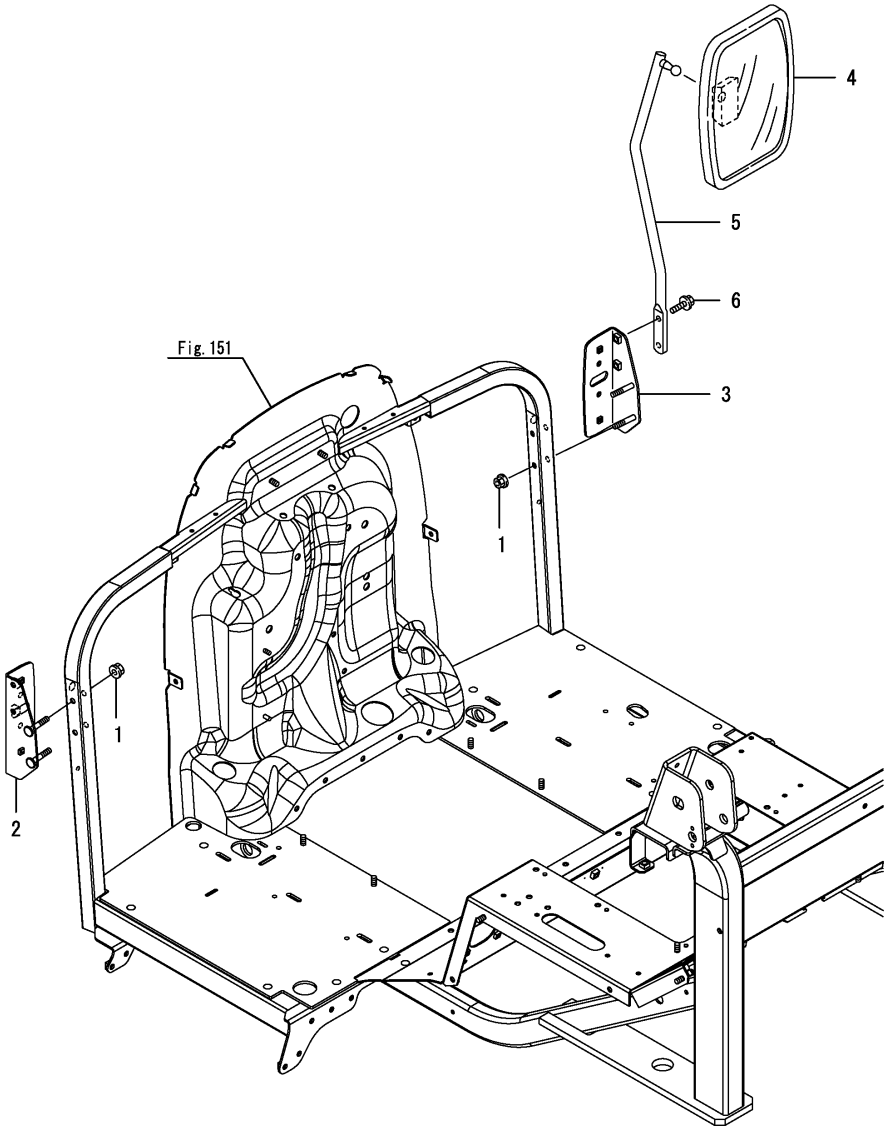

No.	Lev.	Parts No.	Description	Q'ty (A)	(B)	(C)	(D)	(E)	(F)	I	R
1	1	194990-22140	NUT, M8	4	4	4	4				
2	1	1A7180-63860	BRACKET ASSY, LAMP L	1	1	1	1				
3	1	1A7180-63870	BRACKET ASSY, LAMP R	1	1	1	1				
4	1	198440-64100	HEAD, MIRROR	1	1	1	1				
5	1	1A7260-64180	ROD ASSY, STAY	1	1	1	1				
6	1	198093-82510	BOLT, M8X25	2	2	2	2				

N:Old $\xleftrightarrow[\text{No}]{\text{Yes}}$ New, Q:Old $\xleftrightarrow[\text{Yes}]{\text{No}}$ New, R:Old $\xleftrightarrow[\text{Yes}]{\text{Yes}}$ New, S:Old $\xleftrightarrow[\text{No}]{\text{No}}$ New, W:Add, Z:Discontinued, F:Interchangeable by set, K:Q'ty Change

Copyright (C) 2014 YANMAR CO., LTD. All RightsReserved.

Fig.165. REARVIEW MIRROR(HIGH SPEED)

(A)=EG326Y
(B)=EG328Y
(C)=EG330Y
(D)=EG334Y
(E)=
(F)=

No.	Lev.	Parts No.	Description	Q'ty (A)	(B)	(C)	(D)	(E)	(F)	I	R
1	1	194990-22140	NUT, M8	4	4	4	4				
2	1	1A7180-63860	BRACKET ASSY, LAMP L	1	1	1	1				
3	1	1A7180-63870	BRACKET ASSY, LAMP R	1	1	1	1				
4	1	1A7260-64080	ROD ASSY, STAY	1	1	1	1				
5	1	198440-64100	HEAD, MIRROR	2	2	2	2				
6	1	1A7260-64180	ROD ASSY, STAY	1	1	1	1				
7	1	198093-82510	BOLT, M8X25	4	4	4	4				

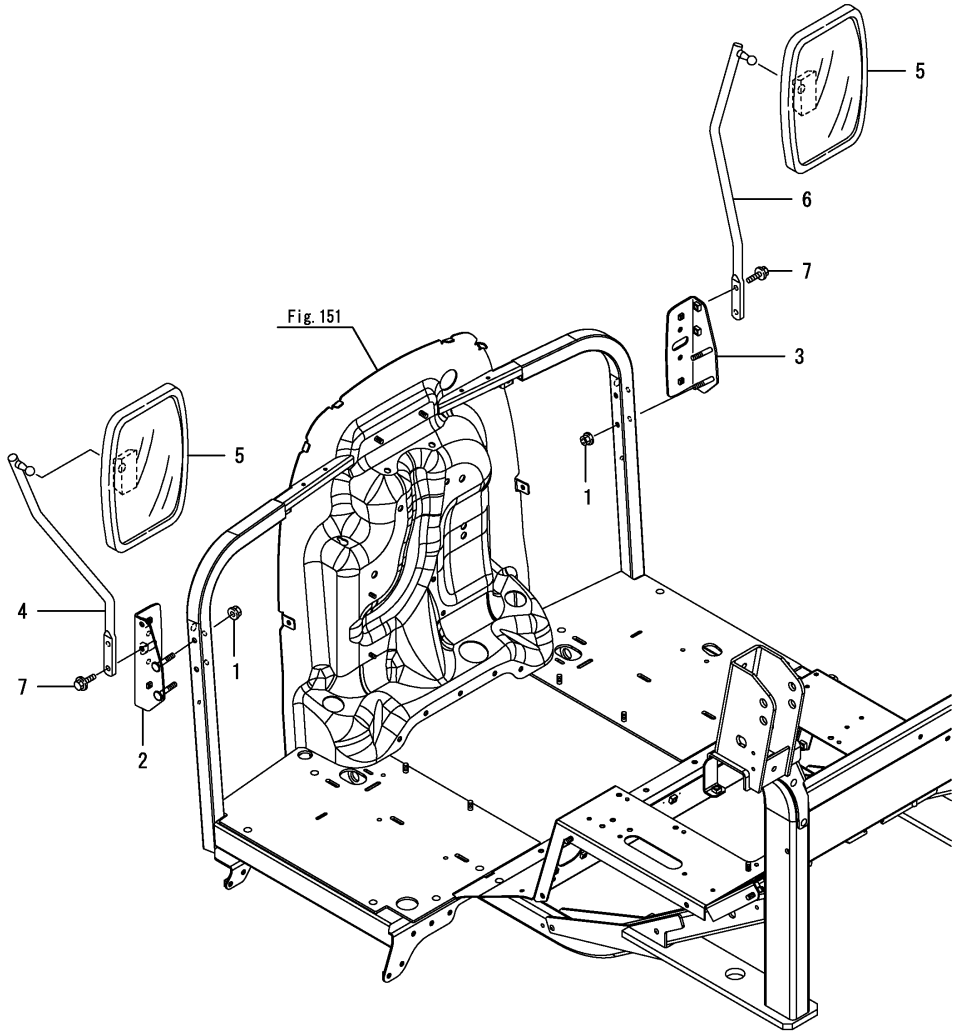

N:Old ◄Yes/No► New, Q:Old ◄No/Yes► New, R:Old ◄Yes/Yes► New, S:Old ◄No/No► New, W:Add, Z:Discontinued, F:Interchangeable by set, K:Q'ty Change

Copyright (C) 2014 YANMAR CO., LTD. All RightsReserved.

Fig.262. REARVIEW MIRROR(A,K,KW)

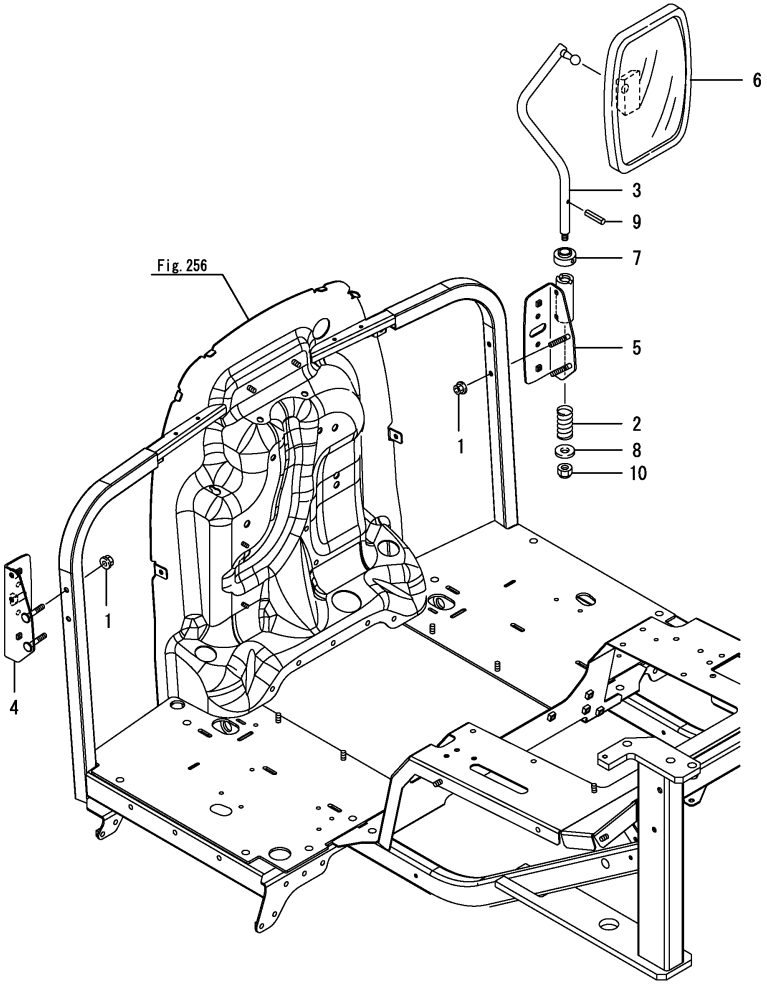

(A)=EG326Y (D)=EG334Y
(B)=EG328Y (E)=
(C)=EG330Y (F)=

No.	Lev.	Parts No.	Description	Q'ty (A)	(B)	(C)	(D)	(E)	(F)	I	R
1	1	194990-22140	NUT, M8			4	4				
2	1	198220-63340	SPRING, FRICTION			1	1				
3	1	1A7260-63851	STAY, BACK MIRROR R			1	1				
4	1	1A7180-63860	BRACKET ASSY, LAMP L			1	1				
5	1	1A7601-63870	BRACKET ASSY, LAMP R			1	1				
6	1	198440-64100	HEAD, MIRROR			1	1				
7	1	198133-64400	GROMMET			1	1				
8	1	22137-120000	WASHER, 12			1	1				
9	1	22351-060036	PIN, SPRING 6.0X36			1	1				
10	1	26346-100002	NUT, M10			1	1				

Remarks
* Applied to the following models.
EG330A, EG330K, EG330KW, EG334A, EG334KW

N:Old $\frac{\text{Yes}}{\text{No}}$ New, Q:Old $\frac{\text{No}}{\text{Yes}}$ New, R:Old $\frac{\text{Yes}}{\text{Yes}}$ New, S:Old $\frac{\text{No}}{\text{No}}$ New, W:Add, Z:Discontinued, F:Interchangeable by set, K:Q'ty Change

Copyright (C) 2014 YANMAR CO., LTD. All RightsReserved.

Fig.263. REARVIEW MIRROR(KW,KWA)(HIGH SPEED)

(A)=EG326Y
(B)=EG328Y
(C)=EG330Y
(D)=EG334Y
(E)=
(F)=

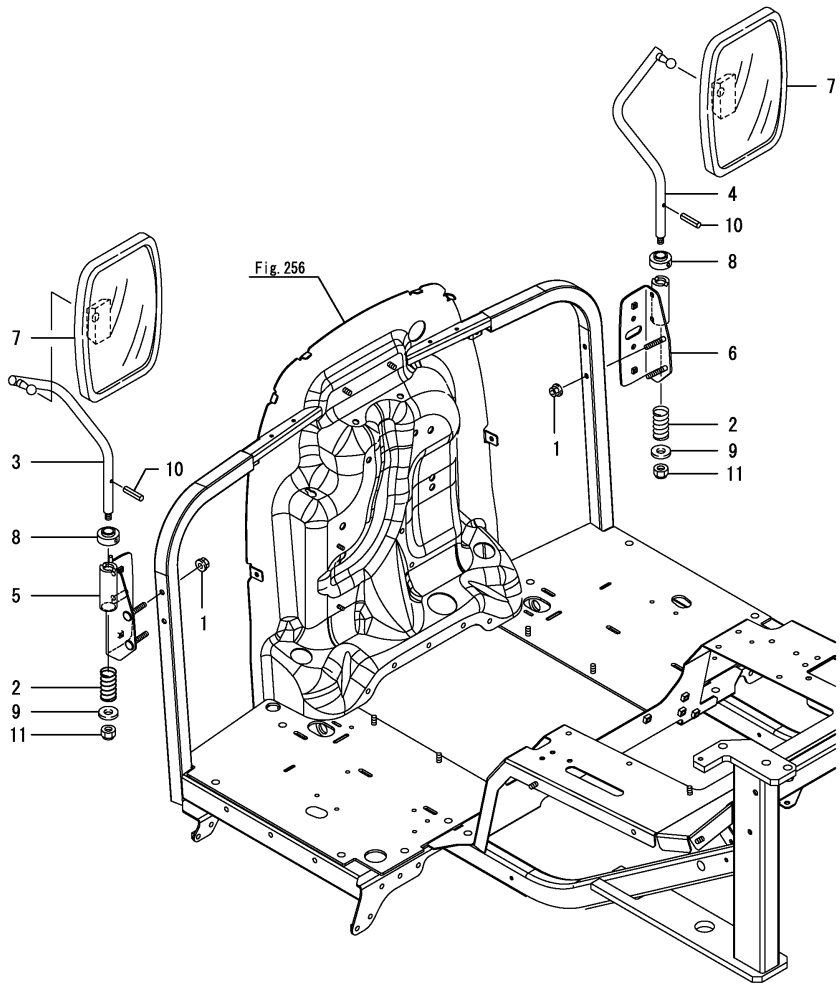

No.	Lev.	Parts No.	Description	Q'ty (A)	(B)	(C)	(D)	(E)	(F)	I	R
1	1	194990-22140	NUT, M8			4	4				
2	1	198220-63340	SPRING, FRICTION			2	2				
3	1	1A7260-63841	STAY, BACK MIRROR L			1	1				
4	1	1A7260-63851	STAY, BACK MIRROR R			1	1				
5	1	1A7601-63860	BRACKET ASSY, LAMP L			1	1				
6	1	1A7601-63870	BRACKET ASSY, LAMP R			1	1				
7	1	198440-64100	HEAD, MIRROR			2	2				
8	1	198133-64400	GROMMET			2	2				
9	1	22137-120000	WASHER, 12			2	2				
10	1	22351-060036	PIN, SPRING 6.0X36			2	2				
11	1	26346-100002	NUT, M10			2	2				

Remarks
* Applied to the following models.
EG330KW, EG334KW, EG334KWA

N:Old $\frac{\text{Yes}}{\text{No}}$ New, Q:Old $\frac{\text{No}}{\text{Yes}}$ New, R:Old $\frac{\text{Yes}}{\text{Yes}}$ New, S:Old $\frac{\text{No}}{\text{No}}$ New, W:Add, Z:Discontinued, F:Interchangeable by set, K:Q'ty Change

Copyright (C) 2014 YANMAR CO., LTD. All RightsReserved.

Fig.166. BLAND MARK

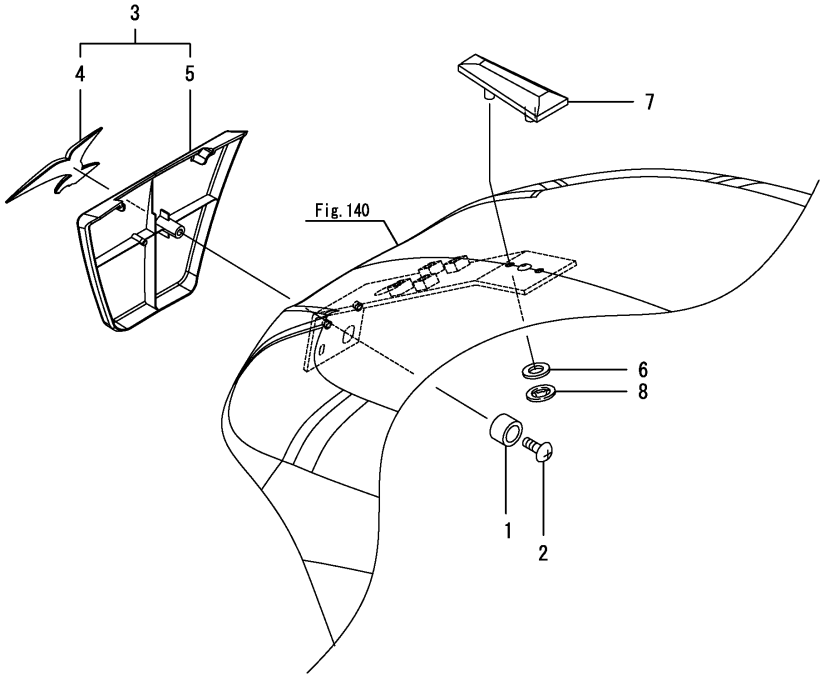

(A)=EG326Y (D)=EG334Y
(B)=EG328Y (E)=
(C)=EG330Y (F)=

No.	Lev.	Parts No.	Description	Q'ty (A)	(B)	(C)	(D)	(E)	(F)	I	R
1	1	1A8070-61330	COLLAR, 10X15X10	1	1	1	1				
2	1	1A7180-61780	SCREW, TAPPING M5X14	1	1	1	1				
3	1	1A7180-65010	MARK ASSY, BRAND	1	1	1	1				
3-1	1	1A7180-65050	MARK ASSY,BRAND	1	1	1	1			N	
	(A=F090698)	(B=F080572)	(C=F071608) (D=F061500)								
4	2	1A7180-65020	MARK, BLAND 80	1	1	1	1				
4-1	2	41800-210040	EMBLEM, M 04	1	1	1	1			N	
	(A=F090698)	(B=F080572)	(C=F071608) (D=F061500)								
5	2	1A7180-65030	COVER, CENTER	1	1	1	1				
5-1	2	1A7180-65060	COVER, CENTER	1	1	1	1			N	
	(A=F090698)	(B=F080572)	(C=F071608) (D=F061500)								
6	1	194555-65130	CUSHION	2	2	2	2				
7	1	194940-65590	MARK,TOP	1	1	1	1				
8	1	198071-65610	NUT, SPEED M5	2	2	2	2				

N:Old $\xleftrightarrow[\text{No}]{\text{Yes}}$ New, Q:Old $\xleftrightarrow[\text{Yes}]{\text{No}}$ New, R:Old $\xleftrightarrow[\text{Yes}]{\text{Yes}}$ New, S:Old $\xleftrightarrow[\text{No}]{\text{No}}$ New, W:Add, Z:Discontinued, F:Interchangeable by set, K:Q'ty Change

Copyright (C) 2014 YANMAR CO., LTD. All RightsReserved.

Fig.297. SMV EMBLEM

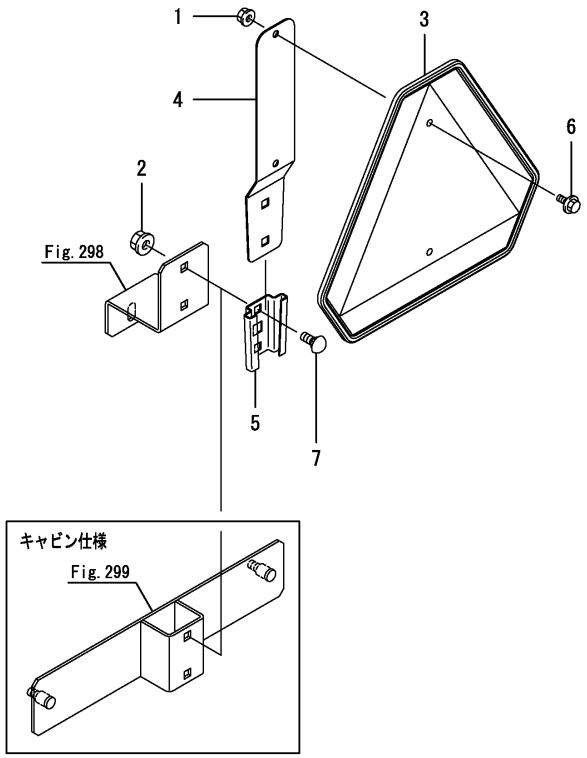

(A)=EG326Y (D)=EG334Y
(B)=EG328Y (E)=
(C)=EG330Y (F)=

No.	Lev.	Parts No.	Description	Q'ty (A)	(B)	(C)	(D)	(E)	(F)	I	R
1	1	194990-22130	NUT, M6	2	2	2	2				
2	1	194990-22140	NUT, M8	2	2	2	2				
3	1	1A8343-65800	EMBLEM ASSY, SMV	1	1	1	1				
4	1	7A7882-85620	M ASSY, STAY SMV	1	1	1	1				
5	1	1A7882-85630	HOLDER, SMV	1	1	1	1				
6	1	26106-060202	BOLT, M6X 20 PLATED	2	2	2	2				
7	1	26487-080163	BOLT, M8X16	2	2	2	2				

N:Old $\overset{\text{Yes}}{\underset{\text{No}}{\leftrightarrows}}$ New, Q:Old $\overset{\text{No}}{\underset{\text{Yes}}{\leftrightarrows}}$ New, R:Old $\overset{\text{Yes}}{\underset{\text{Yes}}{\leftrightarrows}}$ New, S:Old $\overset{\text{No}}{\underset{\text{No}}{\leftrightarrows}}$ New, W:Add, Z:Discontinued, F:Interchangeable by set, K:Q'ty Change

Copyright (C) 2014 YANMAR CO., LTD. All RightsReserved.

Fig.298. SMV BRACKET

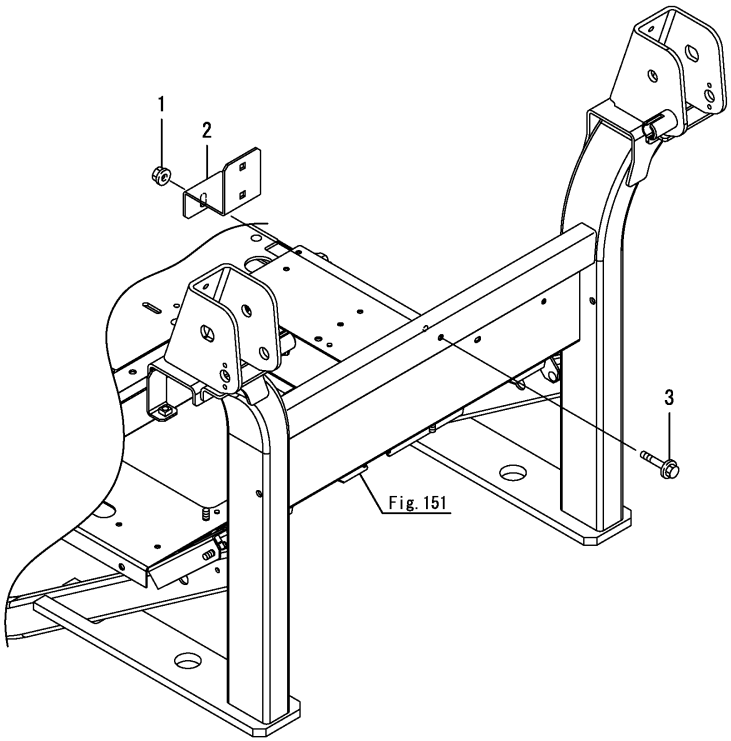

(A)=EG326Y (D)=EG334Y
(B)=EG328Y (E)=
(C)=EG330Y (F)=

No.	Lev.	Parts No.	Description	Q'ty (A)	(B)	(C)	(D)	(E)	(F)	I	R
1	1	194990-22140	NUT, M8	1	1	1	1				
2	1	1A8131-93111	BRACKET, SMV	1	1	1	1				
3	1	26106-080452	BOLT, M8X 45 PLATED	1	1	1	1				

N:Old $\xleftrightarrow[\text{No}]{\text{Yes}}$ New, Q:Old $\xleftrightarrow[\text{Yes}]{\text{No}}$ New, R:Old $\xleftrightarrow[\text{Yes}]{\text{Yes}}$ New, S:Old $\xleftrightarrow[\text{No}]{\text{No}}$ New, W:Add, Z:Discontinued, F:Interchangeable by set, K:Q'ty Change

Copyright (C) 2014 YANMAR CO., LTD. All RightsReserved.

Fig.299. SMV BRACKET(CABIN)

(A)=EG326Y
(B)=EG328Y
(C)=EG330Y
(D)=EG334Y
(E)=
(F)=

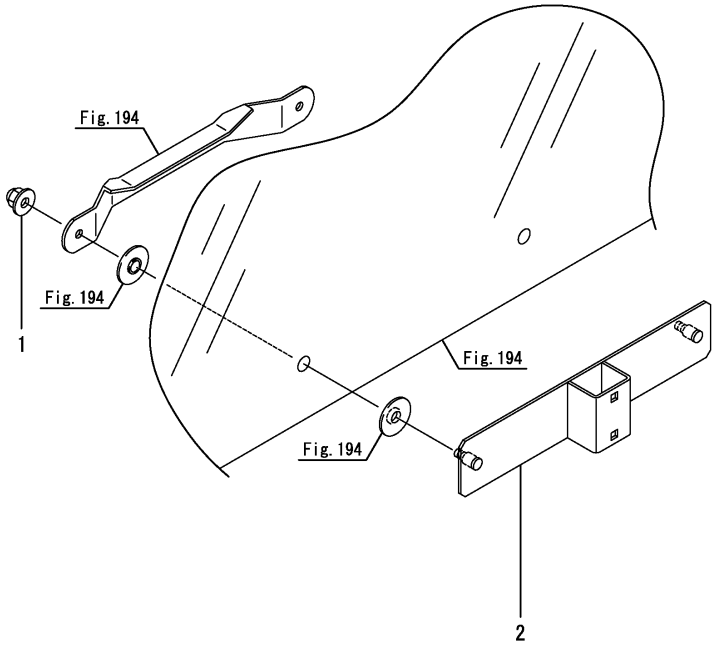

No.	Lev.	Parts No.	Description	Q'ty (A)	(B)	(C)	(D)	(E)	(F)	I	R
1	1	1A8110-83730	NUT, CAP M8	2	2	2	2				
2	1	1A7210-93130	BRACKET ASSY,SMV CAB	1	1	1	1				

N:Old ←Yes/No→ New, Q:Old ←No/Yes→ New, R:Old ←Yes/Yes→ New, S:Old ←No/No→ New, W:Add, Z:Discontinued, F:Interchangeable by set, K:Q'ty Change

Copyright (C) 2014 YANMAR CO., LTD. All RightsReserved.

Fig.167. LABEL(CONTROL)(1)

(A)=EG326Y (D)=EG334Y
(B)=EG328Y (E)=
(C)=EG330Y (F)=

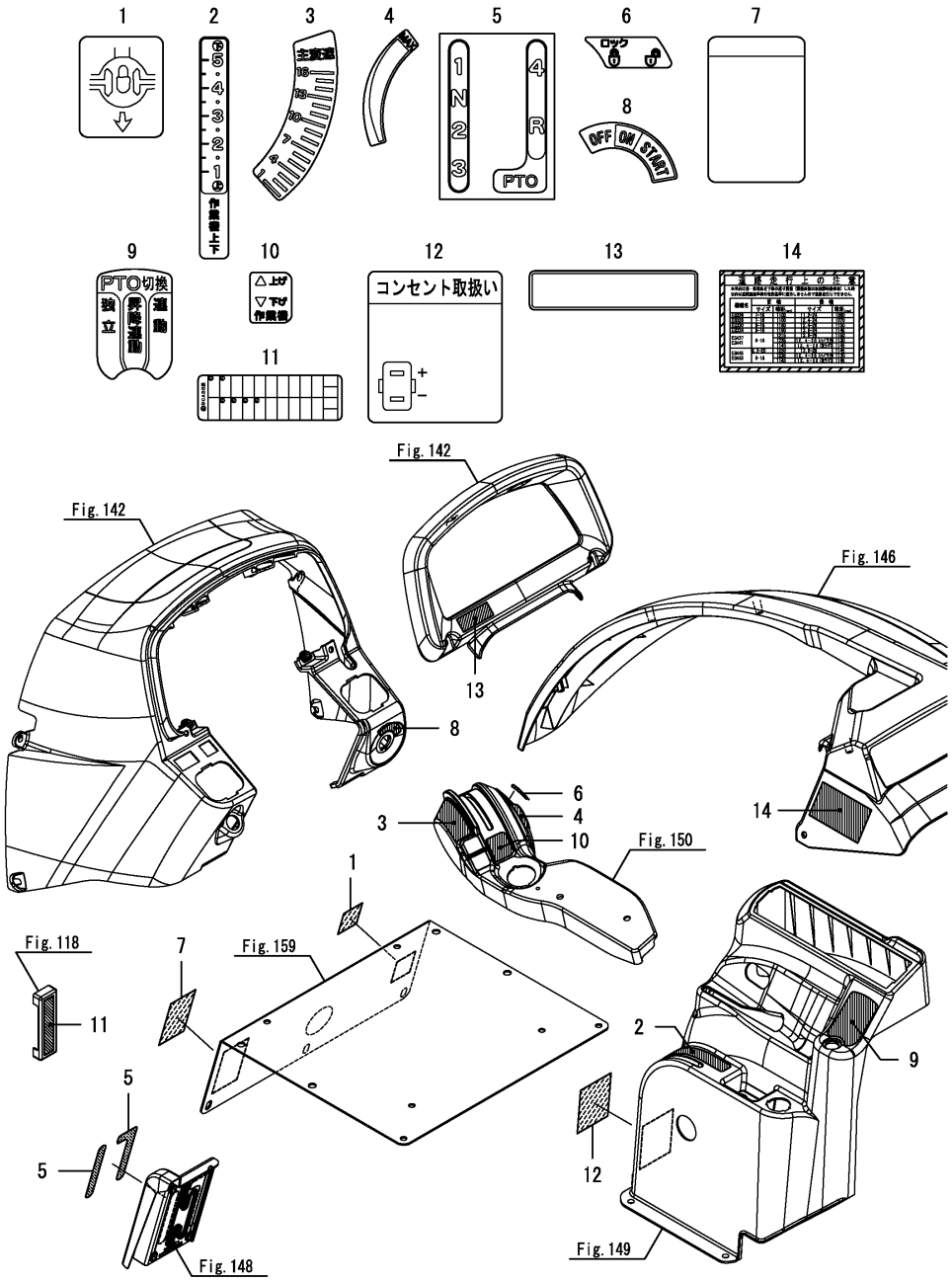

No.	Lev.	Parts No.	Description	Q'ty (A)	(B)	(C)	(D)	(E)	(F)	I	R
1	1	194240-65441	LABEL, DIFF. LOCK	1	1	1	1				
2	1	1A7180-65520	LABEL,	1	1	1	1				
3	1	1A7180-65640	LABEL,MAIN SHIFT	1	1	1	1				
4	1	1A7180-65650	LABEL,SPEED CONTROL	1	1	1	1				
5	1	1A7180-65670	LABEL, RANGE PTO	1	1	1	1				
6	1	1A7180-65680	LABEL,DIAL LOCK	1	1	1	1				
7	1	198071-65690	LABEL,PTO-R	1	1	1	1				
8	1	1A7180-65720	LABEL, KEY SWITCH	1	1	1	1				
9	1	1A7180-65730	LABEL, PTO	1	1	1	1				
10	1	1A7180-65740	LABEL, ONE-TOUCH	1	1	1	1				
11	1	1A7180-65780	LABEL, FUSE	1	1	1	1				
12	1	198200-65810	LABEL,	1	1	1	1				
13	1	198200-65850	LABEL,SIDE LAMP	1	1	1	1				
13-1	1	1A7740-65860	LABEL,SIDE LAMP	1	1	1	1			R	
	(A=F090707)	(B=F080601)	(C=F071714)	(D=F061544)							
14	1	1A7180-65933	LABEL, TREAD	1	1	1	1				
14-1	1	1A7180-65934	LABEL, TREAD	1	1	1	1			N	
	(A=F090103)	(B=F080104)	(C=F070104)	(D=F060104)							
14-2	1	1A7140-65930	LABEL, TREAD	1	1	1	1			N	
	(A=F090153)	(B=F080149)	(C=F070259)	(D=F060254)							
14-4	1	1A7140-65932	LABEL, TREAD	1	1	1	1			N	
	(A=F090706)	(B=F080594)	(C=F070860)	(D=F061080)							

N:Old $\overset{\text{Yes}}{\underset{\text{No}}{\leftrightarrows}}$ New, Q:Old $\overset{\text{No}}{\underset{\text{Yes}}{\leftrightarrows}}$ New, R:Old $\overset{\text{Yes}}{\underset{\text{Yes}}{\leftrightarrows}}$ New, S:Old $\overset{\text{No}}{\underset{\text{No}}{\leftrightarrows}}$ New, W:Add, Z:Discontinued, F:Interchangeable by set, K:Q'ty Change

Copyright (C) 2014 YANMAR CO., LTD. All RightsReserved.

Fig.168. LABEL(CONTROL)(1)(CABIN)

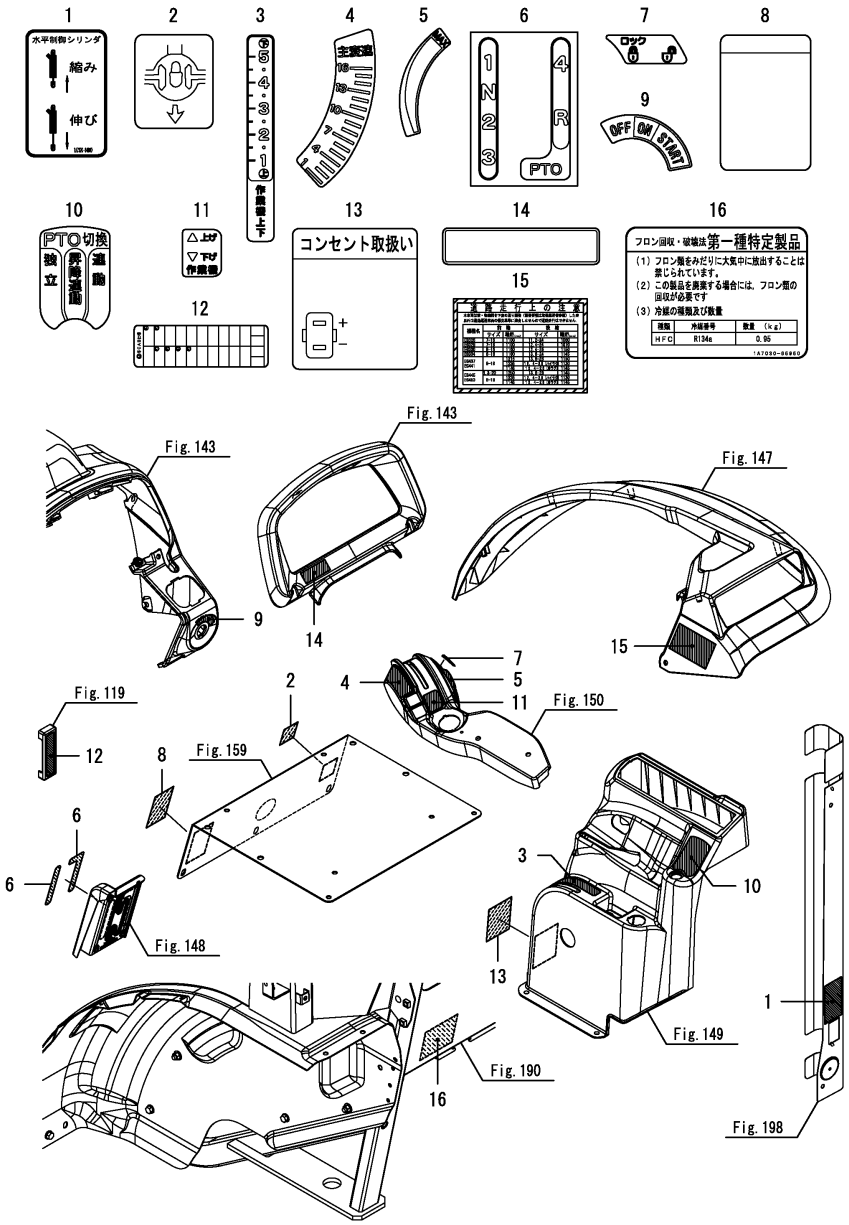

Remarks
* Applied to the following models.
EG326, EG328, EG330, EG330A, EG334, EG334A

(A)=EG326Y (D)=EG334Y
(B)=EG328Y (E)=
(C)=EG330Y (F)=

No.	Lev.	Parts No.	Description	Q'ty (A)	(B)	(C)	(D)	(E)	(F)	I	R
1	1	1A7320-64860	LABEL,	1	1	1	1				
2	1	194240-65441	LABEL, DIFF. LOCK	1	1	1	1				
3	1	1A7180-65520	LABEL,	1	1	1	1				
4	1	1A7180-65640	LABEL,MAIN SHIFT	1	1	1	1				
5	1	1A7180-65650	LABEL,SPEED CONTROL	1	1	1	1				
6	1	1A7180-65670	LABEL, RANGE PTO	1	1	1	1				
7	1	1A7180-65680	LABEL,DIAL LOCK	1	1	1	1				
8	1	198071-65690	LABEL,PTO-R	1	1	1	1				
9	1	1A7210-65720	LABEL, KEY SWITCH	1	1	1	1				
10	1	1A7180-65730	LABEL, PTO	1	1	1	1				
11	1	1A7180-65740	LABEL, ONE-TOUCH	1	1	1	1				
12	1	1A7180-65780	LABEL, FUSE	1	1	1	1				
13	1	198200-65810	LABEL,	1	1	1	1				
14	1	198200-65850	LABEL,SIDE LAMP	1	1	1	1				
14-1	1	1A7740-65860	LABEL,SIDE LAMP	1	1	1	1			R	
	(A=F090707)	(B=F080601)	(C=F071714) (D=F061544)								
15	1	1A7180-65933	LABEL, TREAD	1	1	1	1				
15-1	1	1A7180-65934	LABEL, TREAD	1	1	1	1			N	
	(A=F090103)	(B=F080104)	(C=F070104) (D=F060104)								
15-2	1	1A7140-65930	LABEL, TREAD	1	1	1	1			N	
	(A=F090153)	(B=F080149)	(C=F070259) (D=F060254)								
15-4	1	1A7140-65932	LABEL, TREAD	1	1	1	1			N	
	(A=F090706)	(B=F080594)	(C=F070860) (D=F061080)								
16	1	1A7030-65950	LABEL	1	1	1	1				

N:Old $\xleftarrow[\text{No}]{\text{Yes}}$ New, Q:Old $\xleftarrow[\text{Yes}]{\text{No}}$ New, R:Old $\xleftarrow[\text{Yes}]{\text{Yes}}$ New, S:Old $\xleftarrow[\text{No}]{\text{No}}$ New, W:Add, Z:Discontinued, F:Interchangeable by set, K:Q'ty Change

Copyright (C) 2014 YANMAR CO., LTD. All RightsReserved.

Fig.264. LABEL(CONTROL)(1)(A,K,KW,KWA)

(A)=EG326Y (D)=EG334Y
(B)=EG328Y (E)=
(C)=EG330Y (F)=

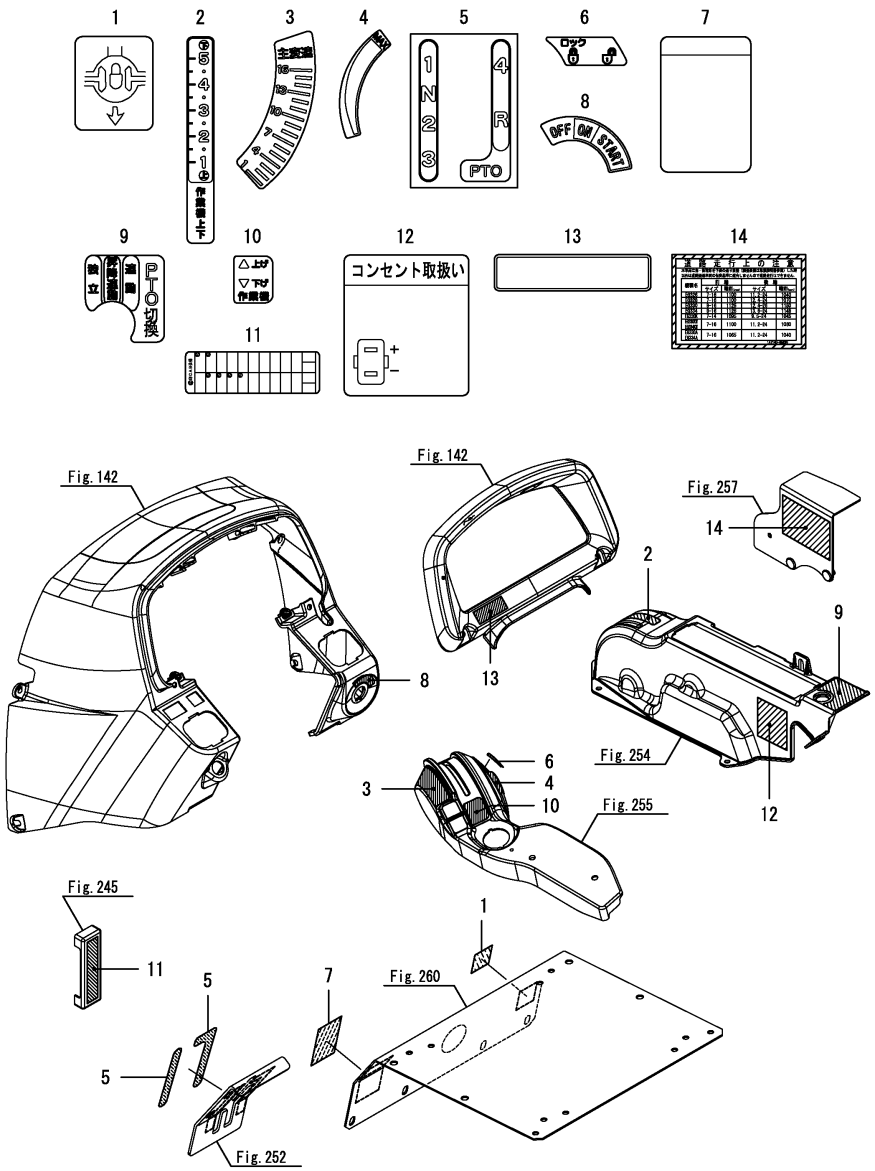

No.	Lev.	Parts No.	Description	Q'ty (A)	(B)	(C)	(D)	(E)	(F)	I	R
1	1	194240-65441	LABEL, DIFF. LOCK			1	1				
2	1	1A7180-65520	LABEL,			1	1				
3	1	1A7180-65640	LABEL,MAIN SHIFT			1	1				
4	1	1A7180-65650	LABEL,SPEED CONTROL			1	1				
5	1	1A7180-65670	LABEL, RANGE PTO			1	1				
6	1	1A7180-65680	LABEL,DIAL LOCK			1	1				
7	1	198071-65690	LABEL,PTO-R			1	1				
8	1	1A7180-65720	LABEL, KEY SWITCH			1	1				
9	1	1A7160-65730	LABEL, PTO			1	1				
10	1	1A7180-65740	LABEL, ONE-TOUCH			1	1				
11	1	1A7180-65780	LABEL, FUSE			1	1				
12	1	198200-65810	LABEL,			1	1				
13	1	198200-65850	LABEL,SIDE LAMP			1	1				
13-1	1	1A7740-65860	LABEL,SIDE LAMP (C=F071714) (D=F061544)			1	1			R	
14	1	1A7140-65930	LABEL, TREAD			1	1				
14-2	1	1A7140-65932	LABEL, TREAD (C=F070860) (D=F061080)			1	1			N	

Remarks
* Applied to the following models.
EG330A, EG330K, EG330KW, EG334A, EG334KW, EG334KWA

N:Old $\xleftarrow[\text{No}]{\text{Yes}}$ New, Q:Old $\xleftarrow[\text{Yes}]{\text{No}}$ New, R:Old $\xleftarrow[\text{Yes}]{\text{Yes}}$ New, S:Old $\xleftarrow[\text{No}]{\text{No}}$ New, W:Add, Z:Discontinued, F:Interchangeable by set, K:Q'ty Change

Copyright (C) 2014 YANMAR CO., LTD. All RightsReserved.

Fig.169. LABEL(CONTROL)(2)

(A)=EG326Y (D)=EG334Y
(B)=EG328Y (E)=
(C)=EG330Y (F)=

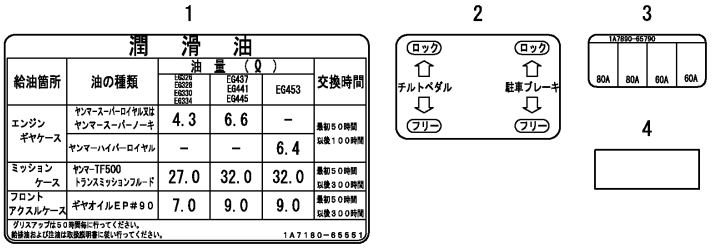

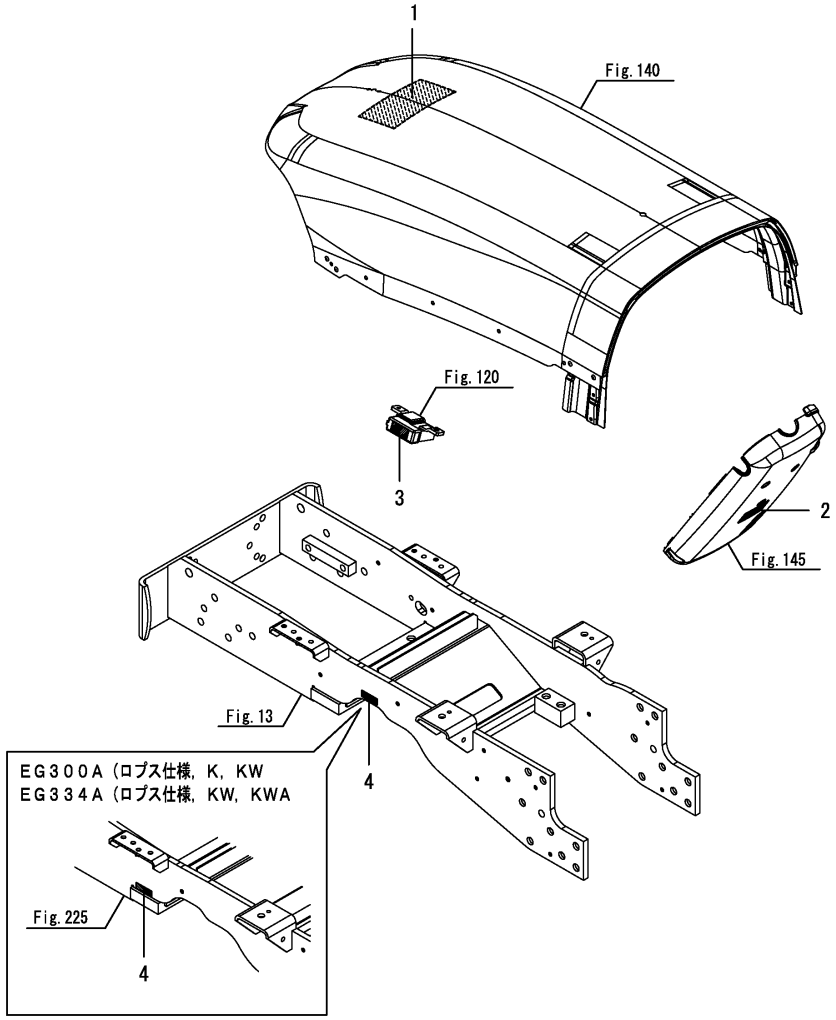

No.	Lev.	Parts No.	Description	Q'ty (A)	(B)	(C)	(D)	(E)	(F)	I	R
1	1	1A7180-65551	LABEL, LUBE	1	1	1	1				
1-1	1	1A7180-65552	LABEL, LUB. OIL	1	1	1	1			N	
	(A=F090524)	(B=F080428)	(C=F071156) (D=F061074)								
2	1	1A7890-65611	LABEL(TILT,BREAK	1	1	1	1				
3	1	1A7890-65790	LABEL,FUSE	1	1	1	1				
4	1	194065-65950	LABEL, PST PIPE	1	1	1	1				

N:Old $\xleftarrow[\text{No}]{\text{Yes}}$ New, Q:Old $\xleftarrow[\text{Yes}]{\text{No}}$ New, R:Old $\xleftarrow[\text{Yes}]{\text{Yes}}$ New, S:Old $\xleftarrow[\text{No}]{\text{No}}$ New, W:Add, Z:Discontinued, F:Interchangeable by set, K:Q'ty Change

Copyright (C) 2014 YANMAR CO., LTD. All RightsReserved.

Fig.170. LABEL(NAME)

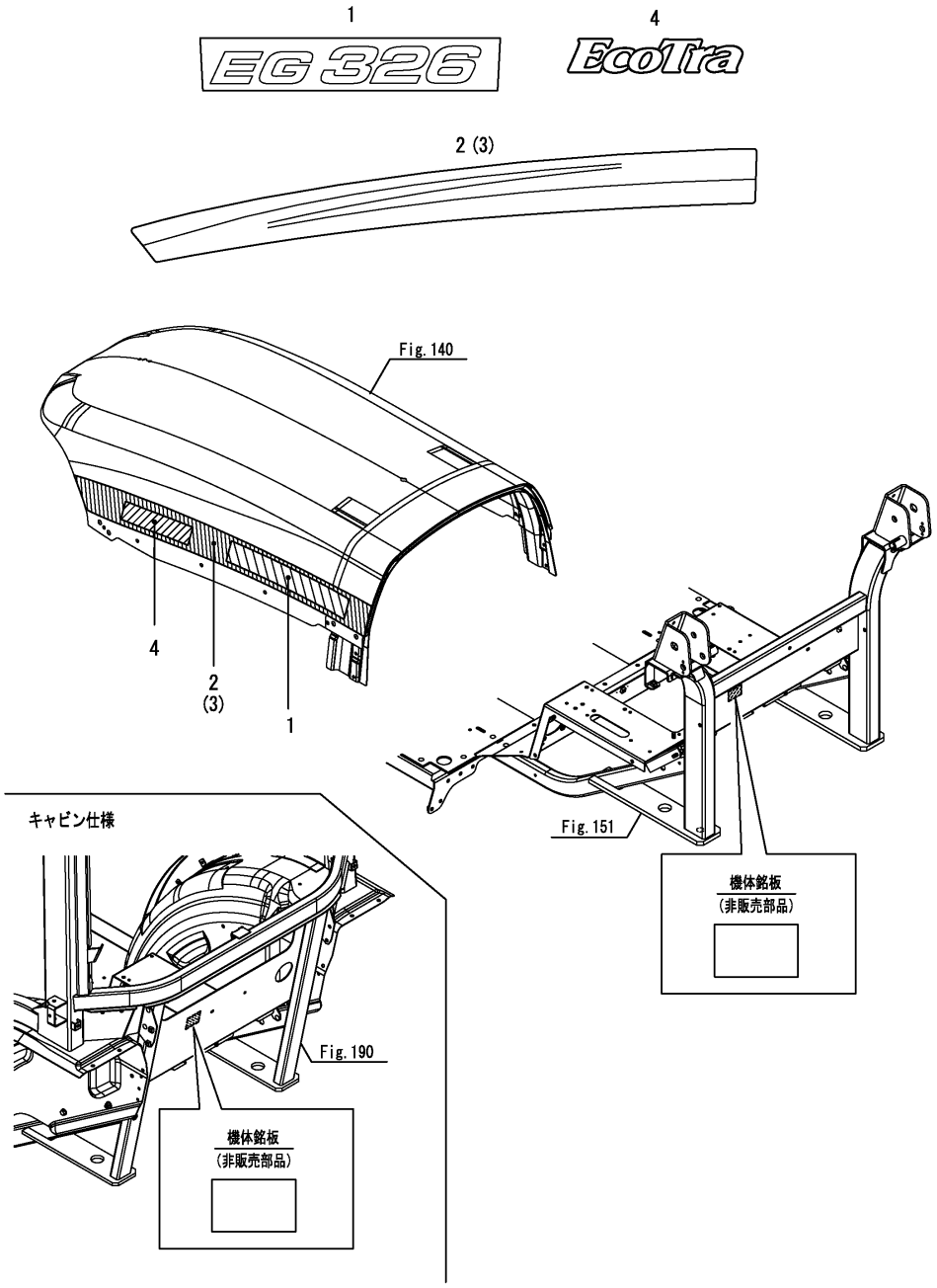

(A)=EG326Y (D)=EG334Y
(B)=EG328Y (E)=
(C)=EG330Y (F)=

No.	Lev.	Parts No.	Description	Q'ty (A)	(B)	(C)	(D)	(E)	(F)	I	R
1	1	1A7140-65110	LABEL, NAME	2							
2	1	1A7140-65180	LABEL, L STRIPE	1							
3	1	1A7140-65190	LABAL, R STRIPE	1							
4	1	1A7601-65250	LABEL,ECOTRA	2							

N:Old ◄Yes/No► New, Q:Old ◄No/Yes► New, R:Old ◄Yes/Yes► New, S:Old ◄No/No► New, W:Add, Z:Discontinued, F:Interchangeable by set, K:Q'ty Change

Copyright (C) 2014 YANMAR CO., LTD. All RightsReserved.

Fig.171. LABEL(NAME)

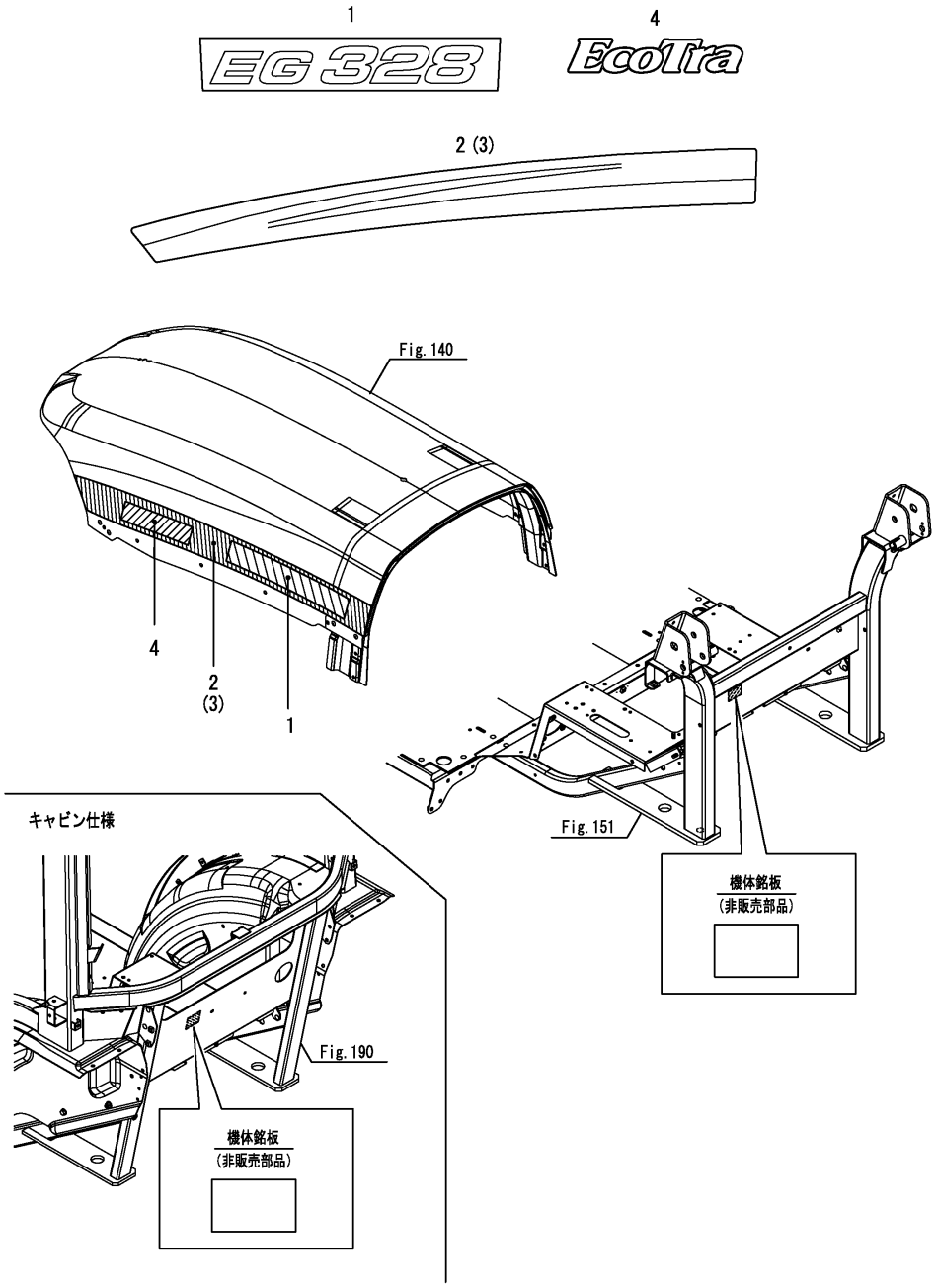

(A)=EG326Y (D)=EG334Y
(B)=EG328Y (E)=
(C)=EG330Y (F)=

No.	Lev.	Parts No.	Description	Q'ty (A)	(B)	(C)	(D)	(E)	(F)	I	R
1	1	1A7150-65110	LABEL, NAME		2						
2	1	1A7140-65180	LABEL, L STRIPE		1						
3	1	1A7140-65190	LABAL, R STRIPE		1						
4	1	1A7601-65250	LABEL,ECOTRA		2						

N:Old $\xleftrightarrow[\text{No}]{\text{Yes}}$ New, Q:Old $\xleftrightarrow[\text{Yes}]{\text{No}}$ New, R:Old $\xleftrightarrow[\text{Yes}]{\text{Yes}}$ New, S:Old $\xleftrightarrow[\text{No}]{\text{No}}$ New, W:Add, Z:Discontinued, F:Interchangeable by set, K:Q'ty Change

Copyright (C) 2014 YANMAR CO., LTD. All RightsReserved.

Fig.172. LABEL(NAME)

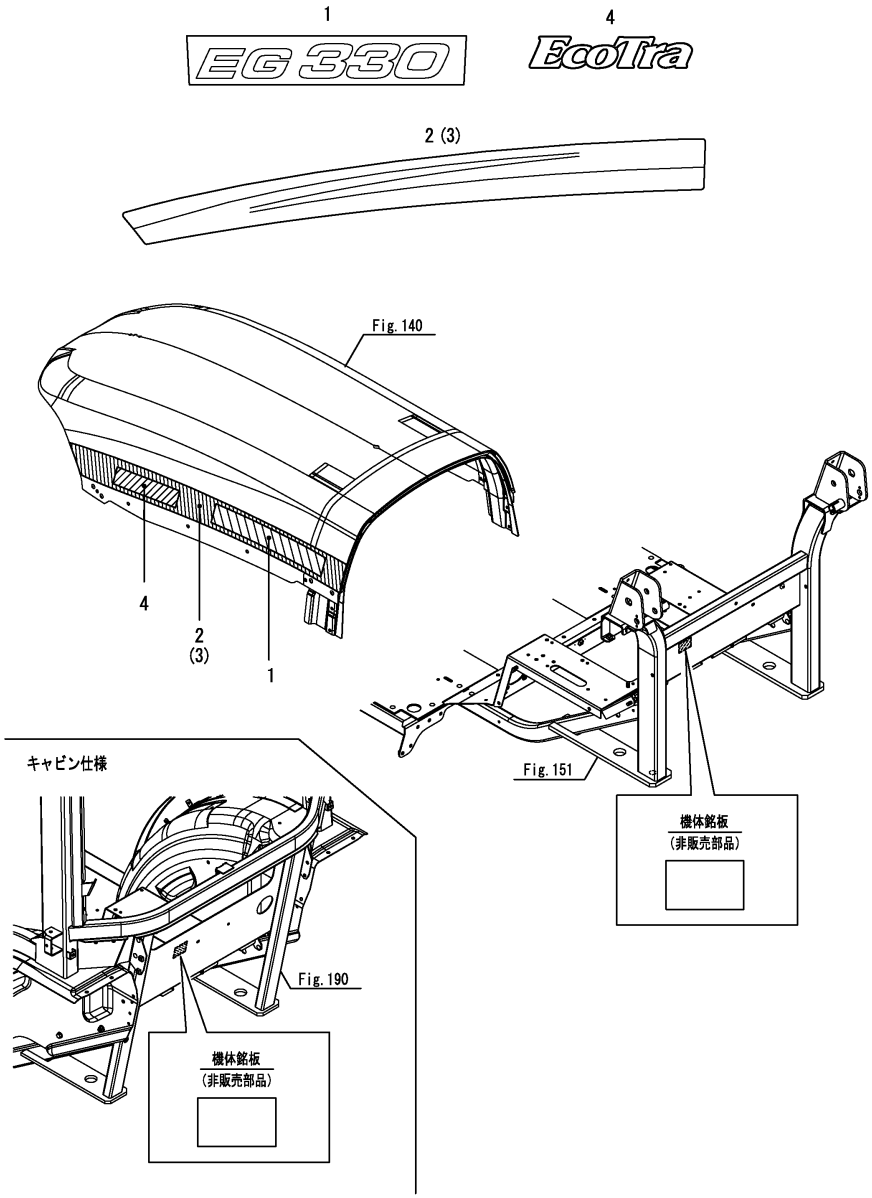

Remarks
* Applied to the following models.
EG330, EG330A(Cabin specification)

(A)=EG326Y (D)=EG334Y
(B)=EG328Y (E)=
(C)=EG330Y (F)=

No.	Lev.	Parts No.	Description	Q'ty (A)	(B)	(C)	(D)	(E)	(F)	I	R
1	1	1A7160-65110	LABEL, NAME			2					
2	1	1A7140-65180	LABEL, L STRIPE			1					
3	1	1A7140-65190	LABAL, R STRIPE			1					
4	1	1A7601-65250	LABEL,ECOTRA			2					

N:Old $\xleftarrow[\text{No}]{\text{Yes}}$ New, Q:Old $\xleftarrow[\text{Yes}]{\text{No}}$ New, R:Old $\xleftarrow[\text{Yes}]{\text{Yes}}$ New, S:Old $\xleftarrow[\text{No}]{\text{No}}$ New, W:Add, Z:Discontinued, F:Interchangeable by set, K:Q'ty Change

Copyright (C) 2014 YANMAR CO., LTD. All RightsReserved.

Fig.173. LABEL(NAME)

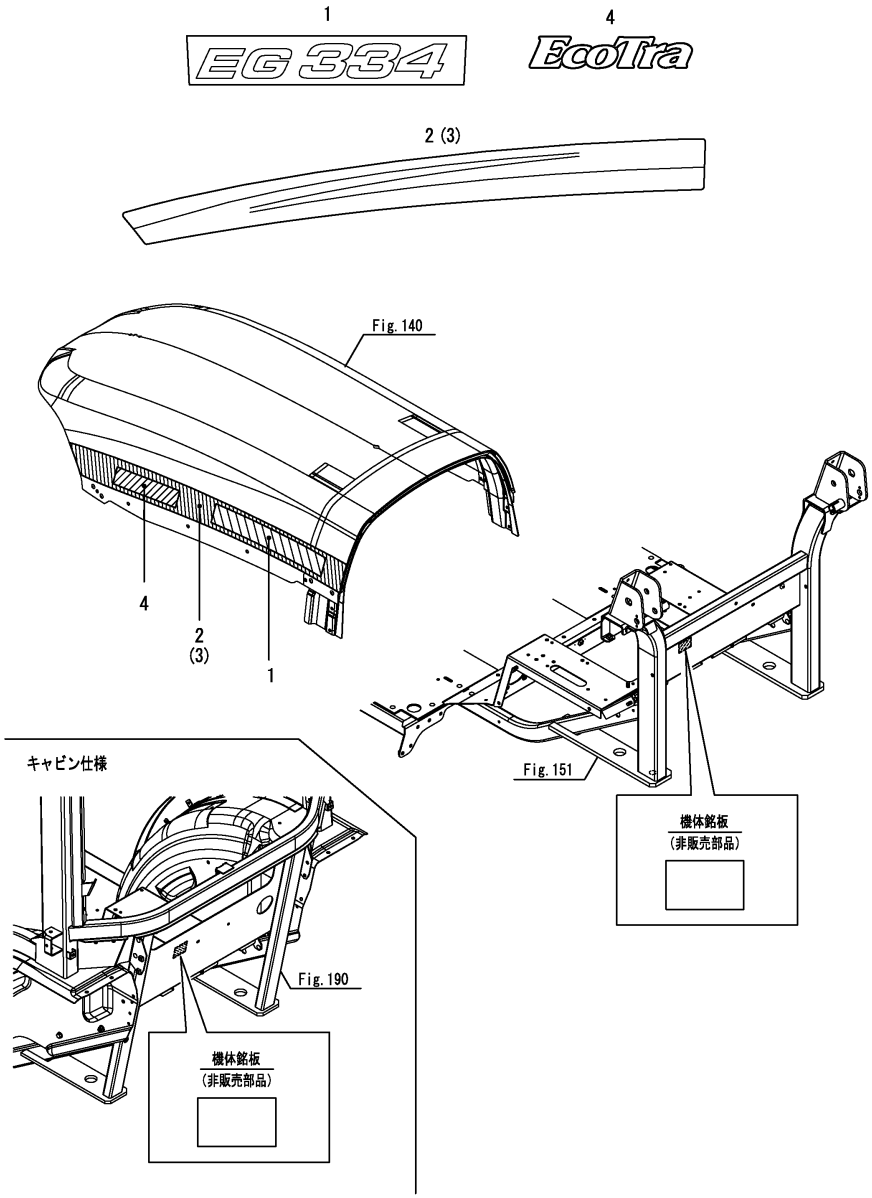

Remarks
* Applied to the following models.
EG334, EG334A(Cabin specification)

(A)=EG326Y (D)=EG334Y
(B)=EG328Y (E)=
(C)=EG330Y (F)=

No.	Lev.	Parts No.	Description	Q'ty (A)	(B)	(C)	(D)	(E)	(F)	I	R
1	1	1A7170-65110	LABEL, NAME				2				
2	1	1A7140-65180	LABEL, L STRIPE				1				
3	1	1A7140-65190	LABAL, R STRIPE				1				
4	1	1A7601-65250	LABEL,ECOTRA				2				

N:Old ←Yes/No→ New, Q:Old ←No/Yes→ New, R:Old ←Yes/Yes→ New, S:Old ←No/No→ New, W:Add, Z:Discontinued, F:Interchangeable by set, K:Q'ty Change

Copyright (C) 2014 YANMAR CO., LTD. All RightsReserved.

Fig.265. LABEL(NAME)(A,K,KW)

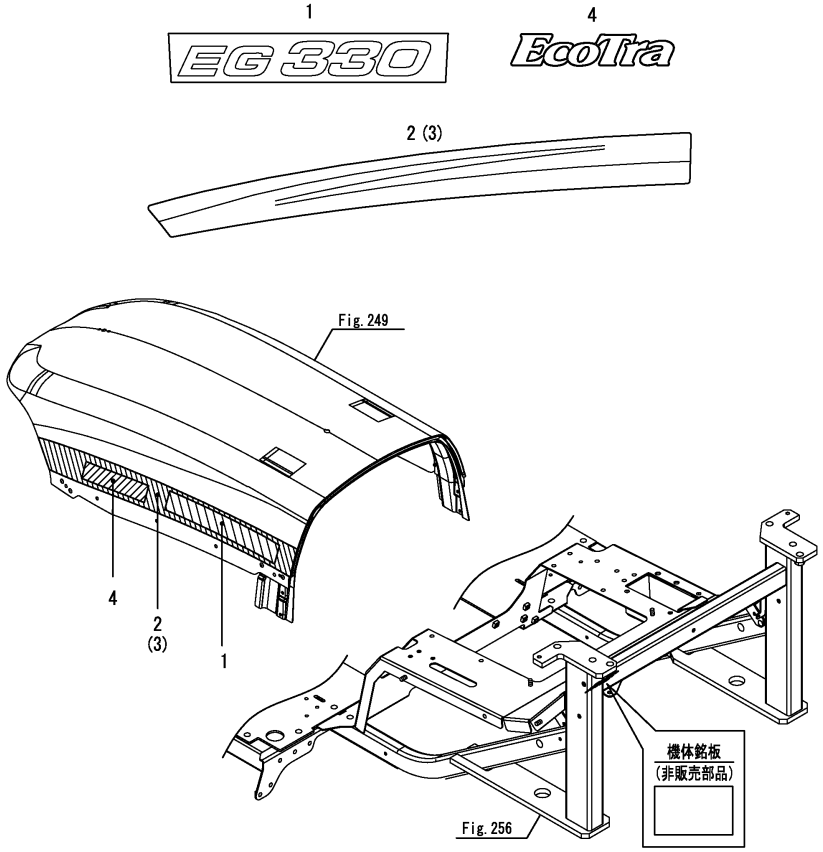

Remarks
* Applied to the following models.
EG330A(Rops specification), EG330K, EG330KW

(A)=EG326Y (D)=EG334Y
(B)=EG328Y (E)=
(C)=EG330Y (F)=

No.	Lev.	Parts No.	Description	Q'ty (A)	(B)	(C)	(D)	(E)	(F)	I	R
1	1	1A7160-65110	LABEL, NAME			2					
2	1	1A7160-65180	LABEL, L STRIPE			1					
3	1	1A7160-65190	LABAL, R STRIPE			1					
4	1	1A7601-65250	LABEL,ECOTRA			2					

N:Old $\xleftrightarrow[\text{No}]{\text{Yes}}$ New, Q:Old $\xleftrightarrow[\text{Yes}]{\text{No}}$ New, R:Old $\xleftrightarrow[\text{Yes}]{\text{Yes}}$ New, S:Old $\xleftrightarrow[\text{No}]{\text{No}}$ New, W:Add, Z:Discontinued, F:Interchangeable by set, K:Q'ty Change

Copyright (C) 2014 YANMAR CO., LTD. All RightsReserved.

Fig.266. LABEL(NAME)(A,KW,KWA)

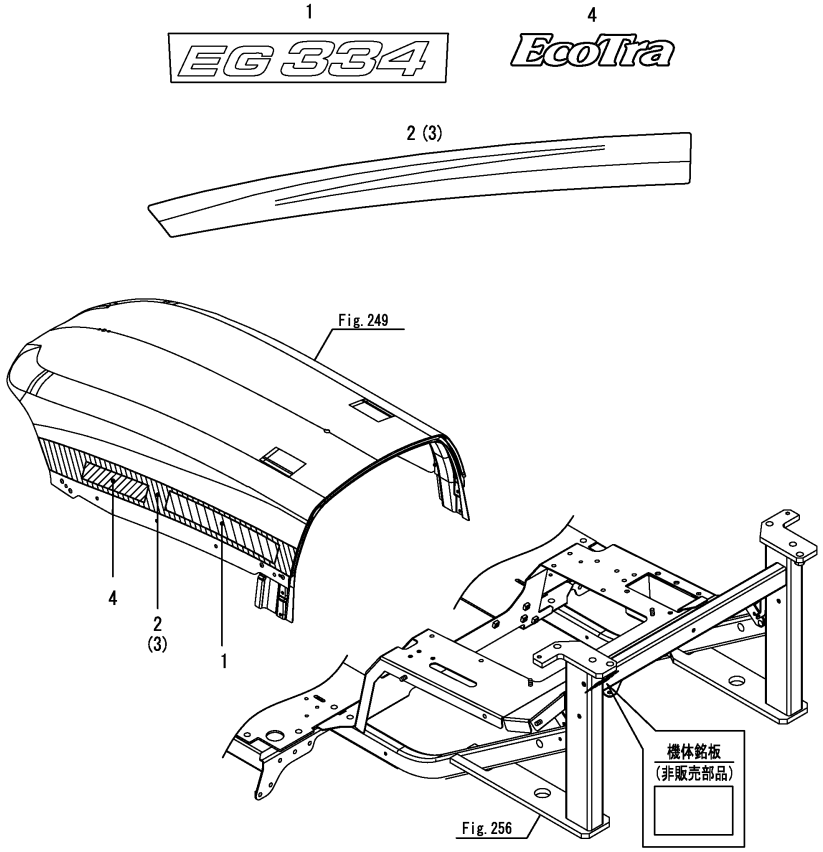

(A)=EG326Y (D)=EG334Y
(B)=EG328Y (E)=
(C)=EG330Y (F)=

No.	Lev.	Parts No.	Description	Q'ty (A)	(B)	(C)	(D)	(E)	(F)	I	R
1	1	1A7170-65110	LABEL, NAME				2				
2	1	1A7160-65180	LABEL, L STRIPE				1				
3	1	1A7160-65190	LABAL, R STRIPE				1				
4	1	1A7601-65250	LABEL,ECOTRA				2				

Remarks
* Applied to the following models.
EG334A(Rops specification), EG334KW, EG334KWA

N:Old $\xleftrightarrow[\text{No}]{\text{Yes}}$ New, Q:Old $\xleftrightarrow[\text{Yes}]{\text{No}}$ New, R:Old $\xleftrightarrow[\text{Yes}]{\text{Yes}}$ New, S:Old $\xleftrightarrow[\text{No}]{\text{No}}$ New, W:Add, Z:Discontinued, F:Interchangeable by set, K:Q'ty Change

Copyright (C) 2014 YANMAR CO., LTD. All RightsReserved.

Fig.174. LABEL(FRAME)

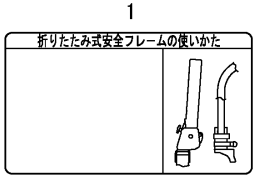

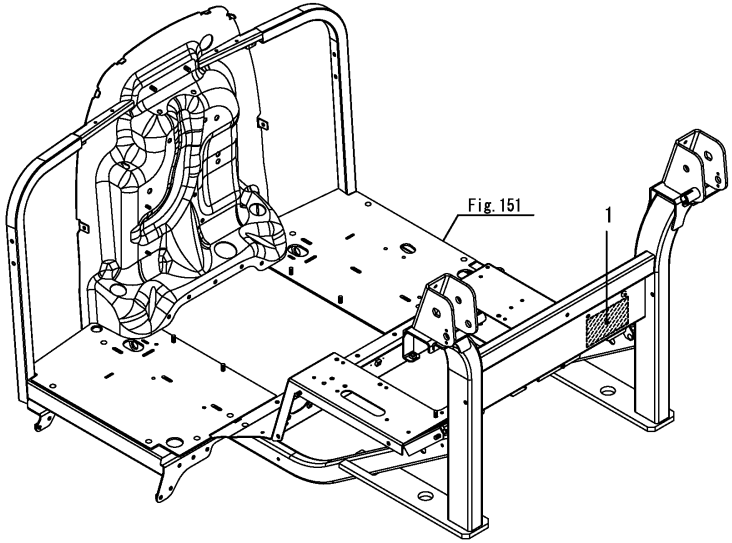

(A)=EG326Y (D)=EG334Y
(B)=EG328Y (E)=
(C)=EG330Y (F)=

No.	Lev.	Parts No.	Description	Q'ty (A)	(B)	(C)	(D)	(E)	(F)	I	R
1	1	198072-65560	PLATE(FLAME	1	1	1	1				

N:Old $\xleftarrow[\text{No}]{\text{Yes}}$ New, Q:Old $\xleftarrow[\text{Yes}]{\text{No}}$ New, R:Old $\xleftarrow[\text{Yes}]{\text{Yes}}$ New, S:Old $\xleftarrow[\text{No}]{\text{No}}$ New, W:Add, Z:Discontinued, F:Interchangeable by set, K:Q'ty Change

Copyright (C) 2014 YANMAR CO., LTD. All RightsReserved.

Fig.175. LABEL(FRAME)(HIGH SPEED)

(A)=EG326Y
(B)=EG328Y
(C)=EG330Y
(D)=EG334Y
(E)=
(F)=

No.	Lev.	Parts No.	Description	Q'ty (A)	(B)	(C)	(D)	(E)	(F)	I	R
1	1	198072-65560	PLATE(FLAME	1	1	1	1				

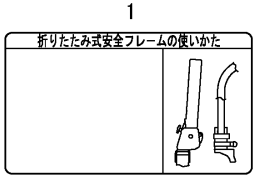

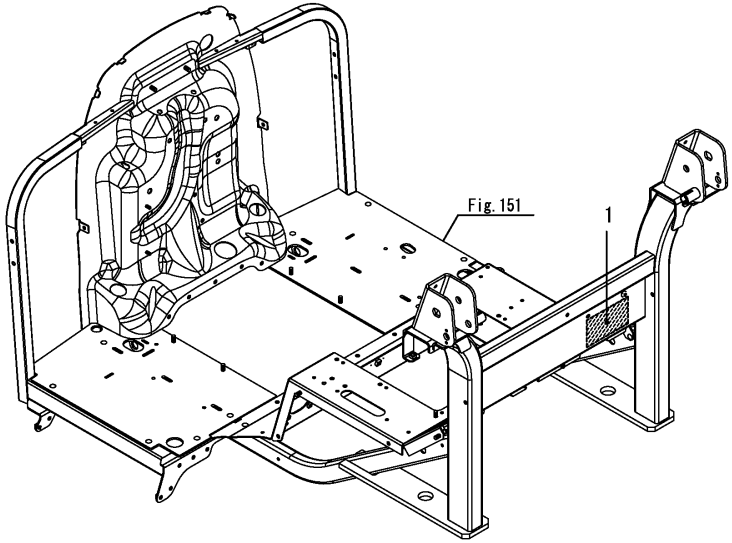

N:Old ⇄(Yes/No) New, Q:Old ⇄(No/Yes) New, R:Old ⇄(Yes/Yes) New, S:Old ⇄(No/No) New, W:Add, Z:Discontinued, F:Interchangeable by set, K:Q'ty Change

Copyright (C) 2014 YANMAR CO., LTD. All RightsReserved.

Fig.267. LABEL(FRAME)(A,K,KW,KWA)

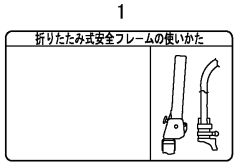

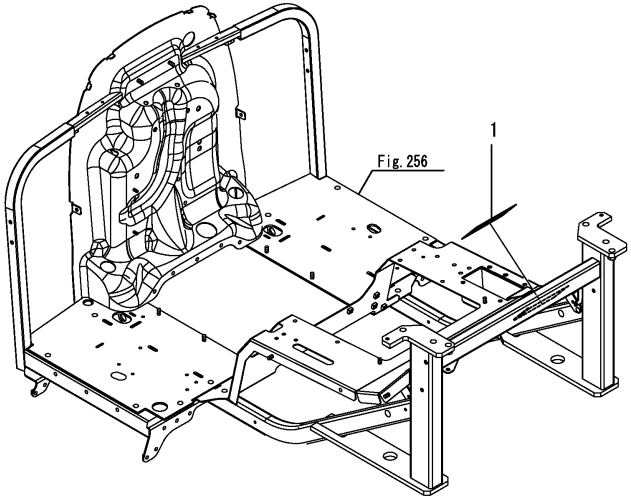

Remarks
* Applied to the following models.
EG330A, EG330K, EG330KW, EG334A, EG334KW, EG334KWA

(A)=EG326Y (D)=EG334Y
(B)=EG328Y (E)=
(C)=EG330Y (F)=

No.	Lev.	Parts No.	Description	Q'ty (A)	(B)	(C)	(D)	(E)	(F)	I	R
1	1	198072-65560	PLATE(FLAME			1	1				

N:Old ◄Yes/No► New, Q:Old ◄No/Yes► New, R:Old ◄Yes/Yes► New, S:Old ◄No/No► New, W:Add, Z:Discontinued, F:Interchangeable by set, K:Q'ty Change

Copyright (C) 2014 YANMAR CO., LTD. All RightsReserved.

Fig.176. LABEL(SUB SHIFT)

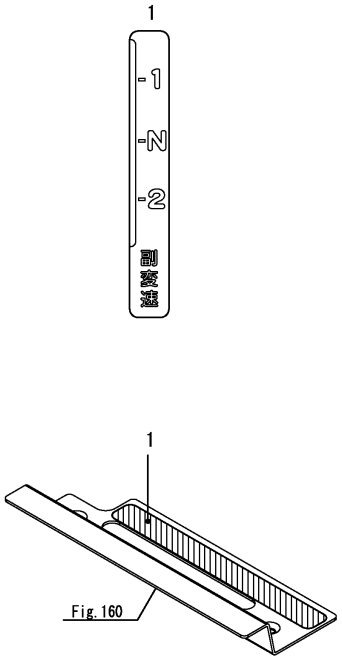

(A)=EG326Y
(B)=EG328Y
(C)=EG330Y
(D)=EG334Y
(E)=
(F)=

No.	Lev.	Parts No.	Description	Q'ty (A)	(B)	(C)	(D)	(E)	(F)	I	R
1	1	1A7180-65660	LABEL, RANGE SUB	1	1	1	1				

Remarks
* Exclusive figure for High Speed specification.

N:Old ◄Yes/No► New, Q:Old ◄No/Yes► New, R:Old ◄Yes/Yes► New, S:Old ◄No/No► New, W:Add, Z:Discontinued, F:Interchangeable by set, K:Q'ty Change

Copyright (C) 2014 YANMAR CO., LTD. All RightsReserved.

Fig.177. LABEL(HIGH SPEED)

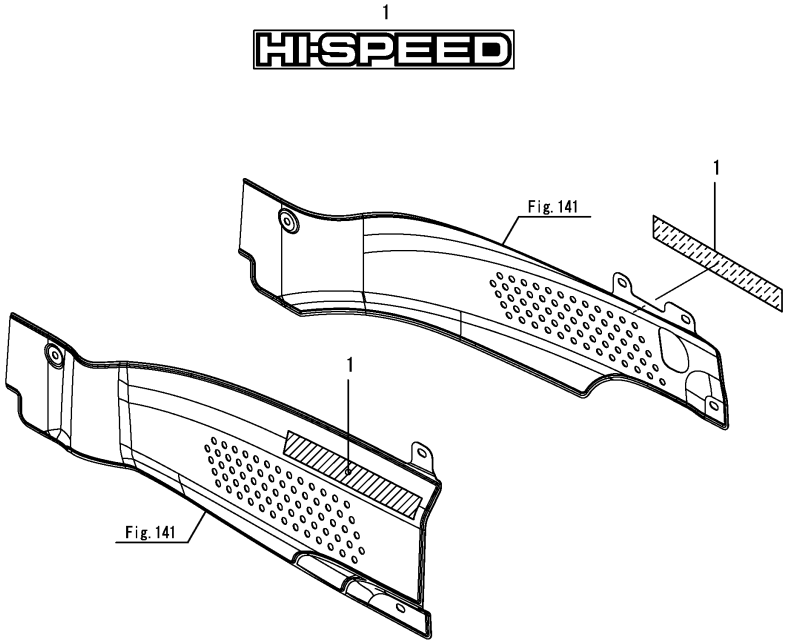

(A)=EG326Y (D)=EG334Y
(B)=EG328Y (E)=
(C)=EG330Y (F)=

No.	Lev.	Parts No.	Description	Q'ty (A)	(B)	(C)	(D)	(E)	(F)	I	R
1	1	1A7280-65910	LABEL,	2	2	2	2				

Remarks
* Exclusive figure for High Speed specification.

N:Old ←Yes/No→ New, Q:Old ←No/Yes→ New, R:Old ←Yes/Yes→ New, S:Old ←No/No→ New, W:Add, Z:Discontinued, F:Interchangeable by set, K:Q'ty Change

Copyright (C) 2014 YANMAR CO., LTD. All RightsReserved.

Fig.178. LABEL(SAFETY)(1)

(A)=EG326Y
(B)=EG328Y
(C)=EG330Y
(D)=EG334Y
(E)=
(F)=

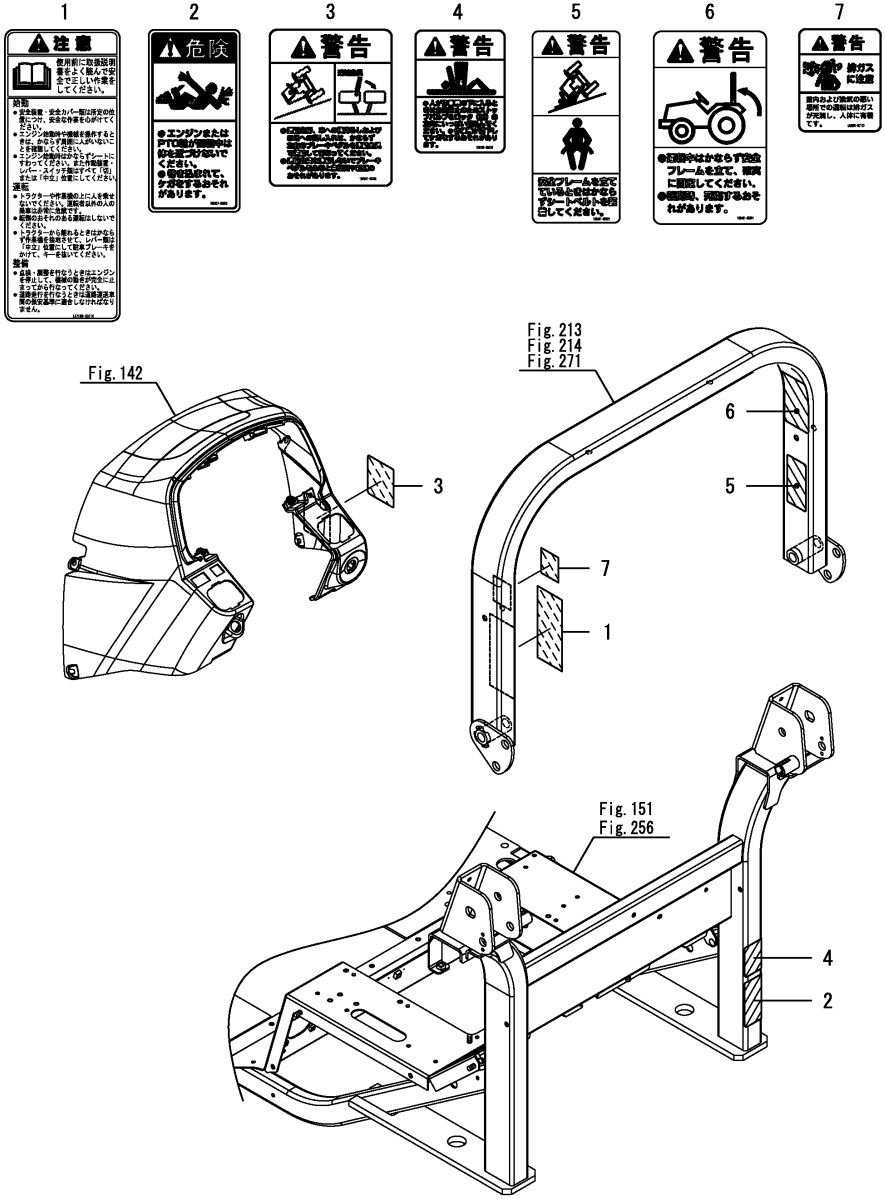

No.	Lev.	Parts No.	Description	Q'ty (A)	(B)	(C)	(D)	(E)	(F)	I	R
1	1	1A7180-65310	LABEL, CAUTION	1	1	1	1				
2	1	198327-65352	LABEL,ROT.SHFT.DANGR	1	1	1	1				
3	1	198101-65361	LABEL,BRAKE PEDAL	1	1	1	1				
4	1	198133-65910	LABEL,HYD.PRS.WARNG.	1	1	1	1				
5	1	198101-65921	LABEL,OPR.SEAT BELT	1	1	1	1				
6	1	198101-85091	LABEL,FRAME	1	1	1	1				
7	1	1A2260-87100	WARNING,EXH.GAS	1	1	1	1				

N:Old $\xleftarrow[\text{No}]{\text{Yes}}$ New, Q:Old $\xleftarrow[\text{Yes}]{\text{No}}$ New, R:Old $\xleftarrow[\text{Yes}]{\text{Yes}}$ New, S:Old $\xleftarrow[\text{No}]{\text{No}}$ New, W:Add, Z:Discontinued, F:Interchangeable by set, K:Q'ty Change

Copyright (C) 2014 YANMAR CO., LTD. All RightsReserved.

Fig.179. LABEL(LABEL(SAFETY)(1)(CABIN)

(A)=EG326Y
(B)=EG328Y
(C)=EG330Y
(D)=EG334Y
(E)=
(F)=

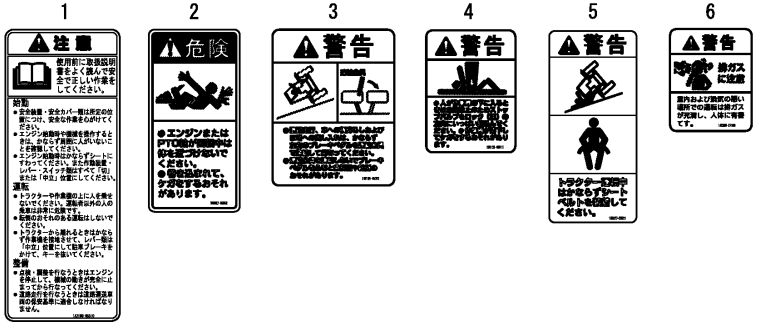

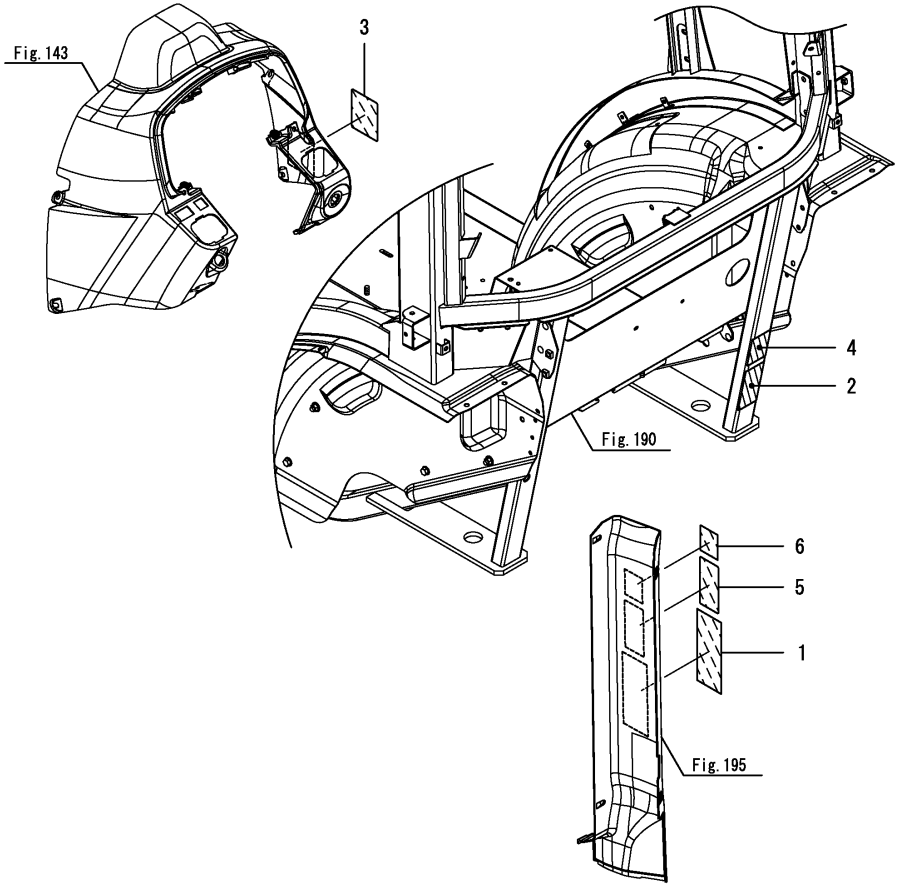

No.	Lev.	Parts No.	Description	Q'ty (A)	(B)	(C)	(D)	(E)	(F)	I	R
1	1	1A7180-65310	LABEL, CAUTION	1	1	1	1				
2	1	198327-65352	LABEL,ROT.SHFT.DANGR	1	1	1	1				
3	1	198101-65361	LABEL,BRAKE PEDAL	1	1	1	1				
4	1	198133-65910	LABEL,HYD.PRS.WARNG.	1	1	1	1				
5	1	198327-65921	LABEL,OPR.SEAT BELT	1	1	1	1				
6	1	1A2260-87100	WARNING,EXH.GAS	1	1	1	1				

N:Old $\xleftarrow[\text{No}]{\text{Yes}}$ New, Q:Old $\xleftarrow[\text{Yes}]{\text{No}}$ New, R:Old $\xleftarrow[\text{Yes}]{\text{Yes}}$ New, S:Old $\xleftarrow[\text{No}]{\text{No}}$ New, W:Add, Z:Discontinued, F:Interchangeable by set, K:Q'ty Change

Copyright (C) 2014 YANMAR CO., LTD. All RightsReserved.

Fig.180. LABEL(SAFETY)(2)

(A)=EG326Y (D)=EG334Y
(B)=EG328Y (E)=
(C)=EG330Y (F)=

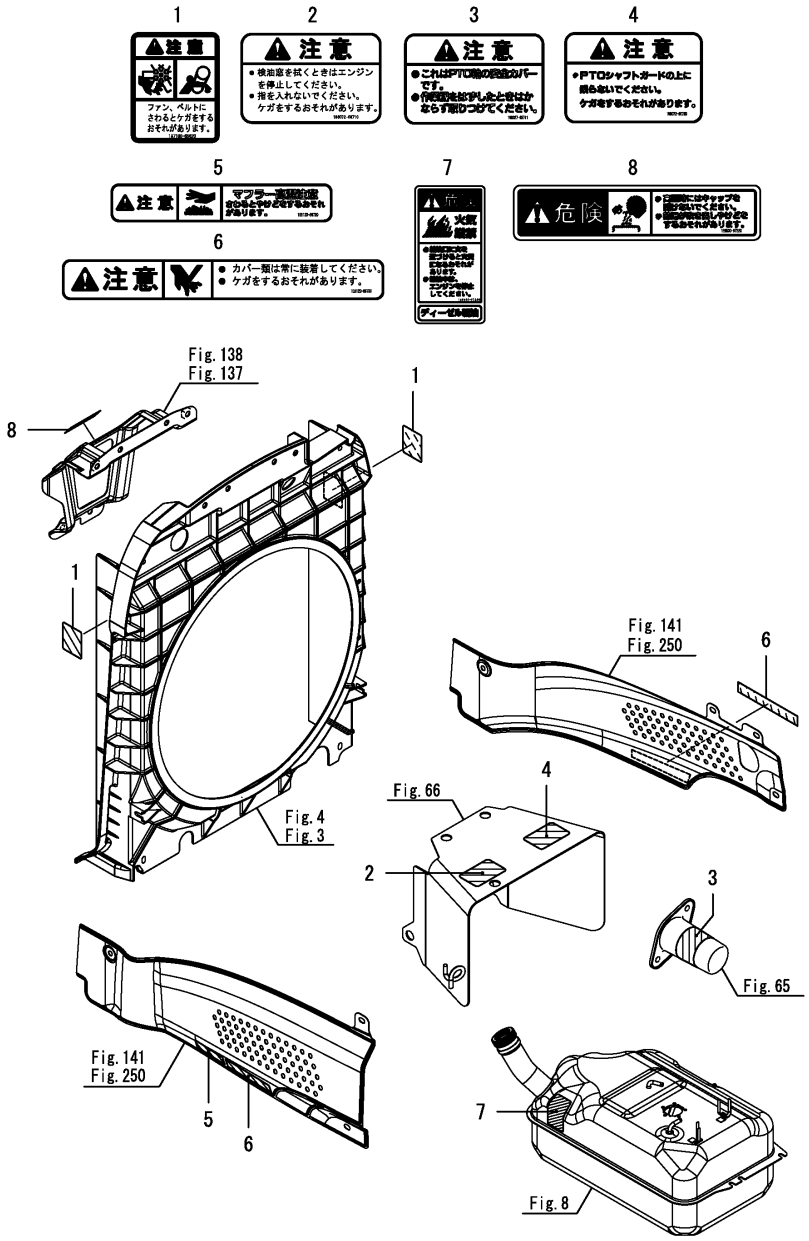

No.	Lev.	Parts No.	Description	Q'ty (A)	(B)	(C)	(D)	(E)	(F)	I	R
1	1	1A7180-65620	CAUTION FAN, BELT	2	2	2	2				
2	1	198072-65710	PLATE(PTO,GUARD	1	1	1	1				
3	1	198327-65711	LABEL,P.T.O.COVER	1	1	1	1				
4	1	198072-65730	LABEL,STEP-ON PROHBT	1	1	1	1				
5	1	1E5120-86720	LABEL, CAUTION	1	1	1	1				
6	1	1E5120-86780	LABEL, COVER CAUTION	2	2	2	2				
7	1	1E8500-97200	LABEL, DANGER A	1	1	1	1				
8	1	1E8500-97220	LABEL, RADIATOR	1	1	1	1				

N:Old $\xleftrightarrow[\text{No}]{\text{Yes}}$ New, Q:Old $\xleftrightarrow[\text{Yes}]{\text{No}}$ New, R:Old $\xleftrightarrow[\text{Yes}]{\text{Yes}}$ New, S:Old $\xleftrightarrow[\text{No}]{\text{No}}$ New, W:Add, Z:Discontinued, F:Interchangeable by set, K:Q'ty Change

Copyright (C) 2014 YANMAR CO., LTD. All RightsReserved.

Fig.296. LABEL(SAFETY)(SMV)

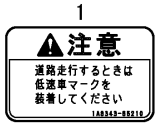

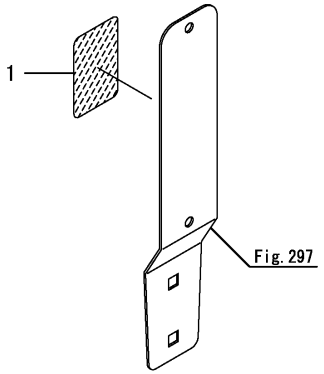

(A)=EG326Y (D)=EG334Y
(B)=EG328Y (E)=
(C)=EG330Y (F)=

No.	Lev.	Parts No.	Description	Q'ty (A)	(B)	(C)	(D)	(E)	(F)	I	R
1	1	1A8343-65210	LABEL, CAUTION SMV	1	1	1	1				

N:Old $\xleftrightarrow[\text{No}]{\text{Yes}}$ New, Q:Old $\xleftrightarrow[\text{Yes}]{\text{No}}$ New, R:Old $\xleftrightarrow[\text{Yes}]{\text{Yes}}$ New, S:Old $\xleftrightarrow[\text{No}]{\text{No}}$ New, W:Add, Z:Discontinued, F:Interchangeable by set, K:Q'ty Change

Copyright (C) 2014 YANMAR CO., LTD. All RightsReserved.

Fig.181. TOP LINK

(A)=EG326Y (D)=EG334Y
(B)=EG328Y (E)=
(C)=EG330Y (F)=

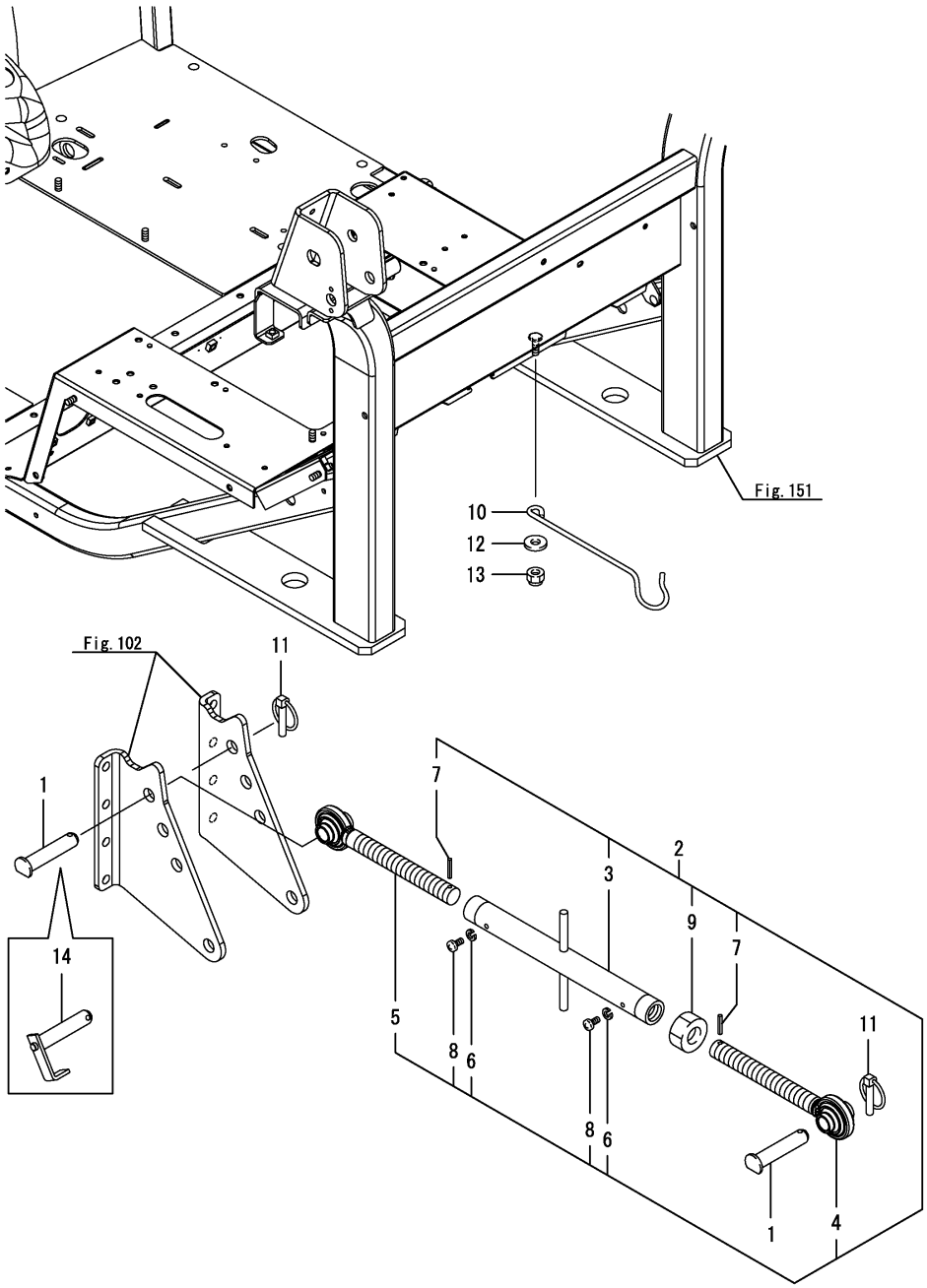

No.	Lev.	Parts No.	Description	Q'ty (A)	(B)	(C)	(D)	(E)	(F)	I	R
1	1	195397-27810	PIN, 19X92	2	2	2	2				
1-1	1	195397-27810	PIN, 19X92	1	1	1	1			K	
	(A=F100008)	(B=F200001)	(C=F300001) (D=F400022)								
2	1	1A7140-71100	LINK KIT, TOP	1	1	1	1				
2-1	1	1A7140-71101	LINK KIT, TOP	1	1	1	1			R	
	(A=F090615)	(B=F080516)	(C=F071383) (D=F061267)								
2-2	1	1A7140-71102	LINK KIT, TOP	1	1	1	1			R	
	(A=F100151)	(B=F200136)	(C=F300542) (D=F400611)								
3	2	198320-71500-1	TURNBUCKLE ASSY	1	1	1	1				
4	2	198133-71600-1	LINK ASSY, TOP R	1	1	1	1				
4-1	2	1A7140-71600	LINK ASSY, TOP R	1	1	1	1			R	
	(A=F090615)	(B=F080516)	(C=F071383) (D=F061267)								
5	2	198133-71700-1	LINK ASSY, TOP L	1	1	1	1				
5-1	2	1A7140-71700	LINK ASSY, TOP L	1	1	1	1			R	
	(A=F090615)	(B=F080516)	(C=F071383) (D=F061267)								
6	2	22217-060000	WASHER, SPRING 6	2	2	2	2				
7	2	22351-040024	PIN, SPRING 4.0X24	2	2	2	2				
8	2	26557-060062	SCREW, M6X 6	2	2	2	2				
9	2	26716-240002	NUT, M24	1	1	1	1				
10	1	1A7320-71710	HOOK, TOP LINK	1	1	1	1				
11	1	194180-72950	PIN ASSY, LOCK	2	2	2	2				
12	1	22157-080000	WASHER, 8	1	1	1	1				
13	1	26346-080002	NUT, M8	1	1	1	1				
14	1	1A7180-71400	PIN, TOPLINK	1	1	1	1			W	
	(A=F100008)	(B=F200001)	(C=F300001) (D=F400022)								

N:Old $\overset{\text{Yes}}{\underset{\text{No}}{\leftrightarrow}}$ New, Q:Old $\overset{\text{No}}{\underset{\text{Yes}}{\leftrightarrow}}$ New, R:Old $\overset{\text{Yes}}{\underset{\text{Yes}}{\leftrightarrow}}$ New, S:Old $\overset{\text{No}}{\underset{\text{No}}{\leftrightarrow}}$ New, W:Add, Z:Discontinued, F:Interchangeable by set, K:Q'ty Change

Copyright (C) 2014 YANMAR CO., LTD. All RightsReserved.

Fig.300. TOP LINK(KWA)

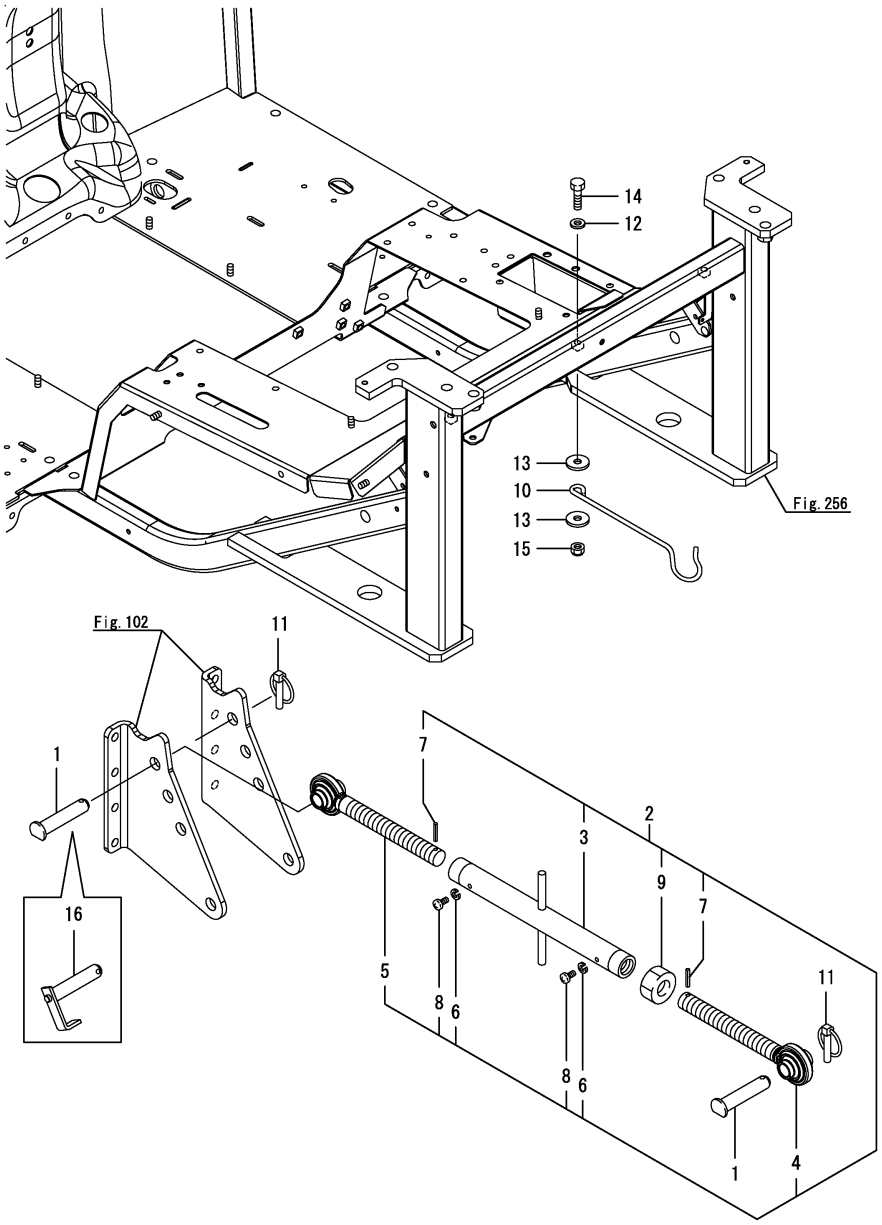

(A)=EG326Y (D)=EG334Y
(B)=EG328Y (E)=
(C)=EG330Y (F)=

No.	Lev.	Parts No.	Description	Q'ty (A)	(B)	(C)	(D)	(E)	(F)	I	R
1	1	195397-27810	PIN, 19X92				2				
1-1	1	195397-27810	PIN, 19X92 (D=F400022)				1			K	
2	1	1A7140-71100	LINK KIT, TOP				1				
2-1	1	1A7140-71101	LINK KIT, TOP (D=F061267)				1			R	
2-2	1	1A7140-71102	LINK KIT, TOP (D=F400611)				1			R	
3	2	198320-71500-1	TURNBUCKLE ASSY				1				
4	2	198133-71600-1	LINK ASSY, TOP R				1				
4-1	2	1A7140-71600	LINK ASSY, TOP R (D=F061267)				1			R	
5	2	198133-71700-1	LINK ASSY, TOP L				1				
5-1	2	1A7140-71700	LINK ASSY, TOP L (D=F061267)				1			R	
6	2	22217-060000	WASHER, SPRING 6				2				
7	2	22351-040024	PIN, SPRING 4.0X24				2				
8	2	26557-060062	SCREW, M6X 6				2				
9	2	26716-240002	NUT, M24				1				
10	1	1A7320-71710	HOOK, TOP LINK				1				
11	1	194180-72950	PIN ASSY, LOCK				2				
12	1	22137-080000	WASHER, 8				1				
13	1	22157-080000	WASHER, 8				2				
14	1	26116-080304	BOLT, M8X 30 PLATED				1				
15	1	26346-080002	NUT, M8				1				
16	1	1A7180-71400	PIN, TOPLINK (D=F400022)				1			W	

Remarks
* Applied to the following models.
EG334KWA

N:Old $\frac{\text{Yes}}{\text{No}}$ New, Q:Old $\frac{\text{No}}{\text{Yes}}$ New, R:Old $\frac{\text{Yes}}{\text{Yes}}$ New, S:Old $\frac{\text{No}}{\text{No}}$ New, W:Add, Z:Discontinued, F:Interchangeable by set, K:Q'ty Change

Copyright (C) 2014 YANMAR CO., LTD. All RightsReserved.

Fig.182. LIFT LINK(LEFT)

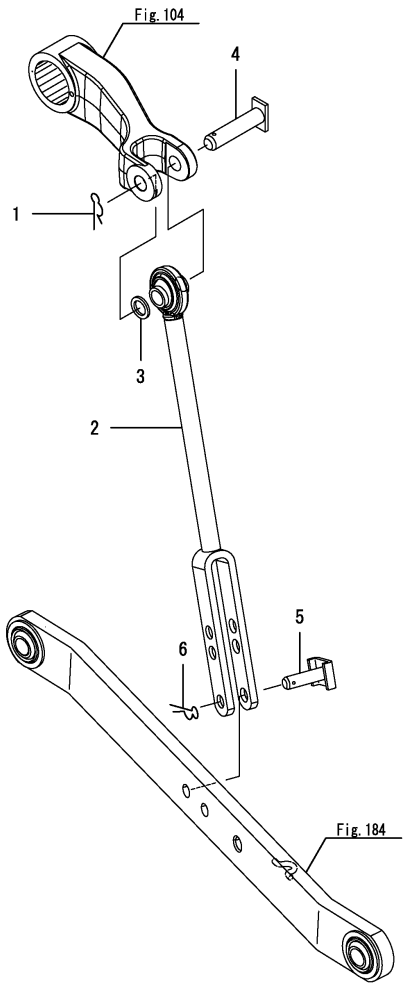

(A)=EG326Y (B)=EG328Y (C)=EG330Y (D)=EG334Y (E)= (F)=

No.	Lev.	Parts No.	Description	Q'ty (A)	(B)	(C)	(D)	(E)	(F)	I	R
1	1	195184-15360	PIN, SNAP 19	1	1	1	1				
2	1	1A7140-72300	LINK ASSY, LIFT L	1	1	1	1				
2-1	1	1A7140-72301	LINK ASSY, LIFT L	1	1	1	1			N	
	(A=F090103)	(B=F080104)	(C=F070104) (D=F060104)								
3	1	194640-72420	WASHER, 19X28X1	1	1	1	1				
4	1	1A7180-72450	PIN, ARM	1	1	1	1				
4-1	1	1A7180-72451	PIN, LIFT ARM	1	1	1	1			N	
	(A=F090204)	(B=F080194)	(C=F070410) (D=F060393)								
5	1	1A7180-72550	PIN, LIFT YOKE	1	1	1	1				
6	1	1A6150-73700	PIN, SNAP 16	1	1	1	1				

Remarks
* Applied to the following models.
EG326, EG328, EG330, EG334
EG334KWA

N:Old $\xleftarrow[\text{No}]{\text{Yes}}$ New, Q:Old $\xleftarrow[\text{Yes}]{\text{No}}$ New, R:Old $\xleftarrow[\text{Yes}]{\text{Yes}}$ New, S:Old $\xleftarrow[\text{No}]{\text{No}}$ New, W:Add, Z:Discontinued, F:Interchangeable by set, K:Q'ty Change

Copyright (C) 2014 YANMAR CO., LTD. All RightsReserved.

Fig.268. LIFT LINK(LEFT)(A,K,KW)

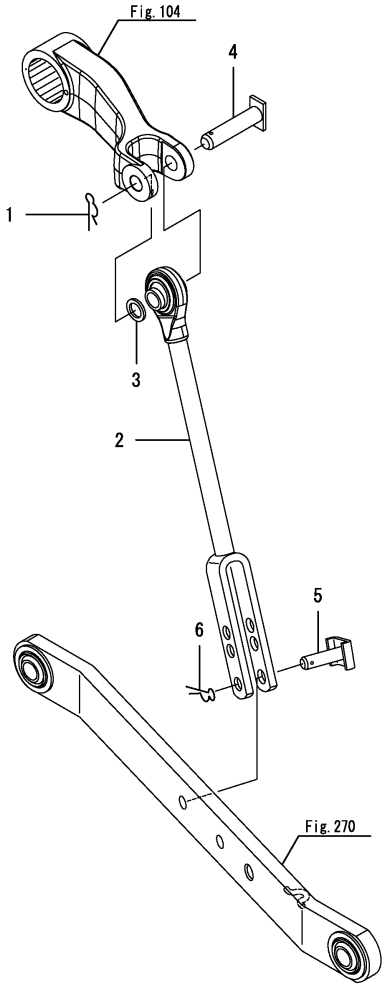

(A)=EG326Y (B)=EG328Y (C)=EG330Y (D)=EG334Y (E)= (F)=

No.	Lev.	Parts No.	Description	Q'ty (A)	(B)	(C)	(D)	(E)	(F)	I	R
1	1	195184-15360	PIN, SNAP 19			1	1				
2	1	1A7160-72300	LINK ASSY, LIFT L.H.			1	1				
3	1	194640-72420	WASHER, 19X28X1			1	1				
4	1	1A7180-72450	PIN, ARM			1	1				
4-1	1	1A7180-72451	PIN, LIFT ARM (C=F070410) (D=F060393)			1	1			N	
5	1	1A7180-72550	PIN, LIFT YOKE			1	1				
6	1	1A6150-73700	PIN, SNAP 16			1	1				

Remarks
* Applied to the following models.
EG330A, EG330K, EG330KW, EG334A, EG334KW

N:Old ◄Yes/No► New, Q:Old ◄No/Yes► New, R:Old ◄Yes/Yes► New, S:Old ◄No/No► New, W:Add, Z:Discontinued, F:Interchangeable by set, K:Q'ty Change

Copyright (C) 2014 YANMAR CO., LTD. All RightsReserved.

Fig.183. LIFTING CYLINDER

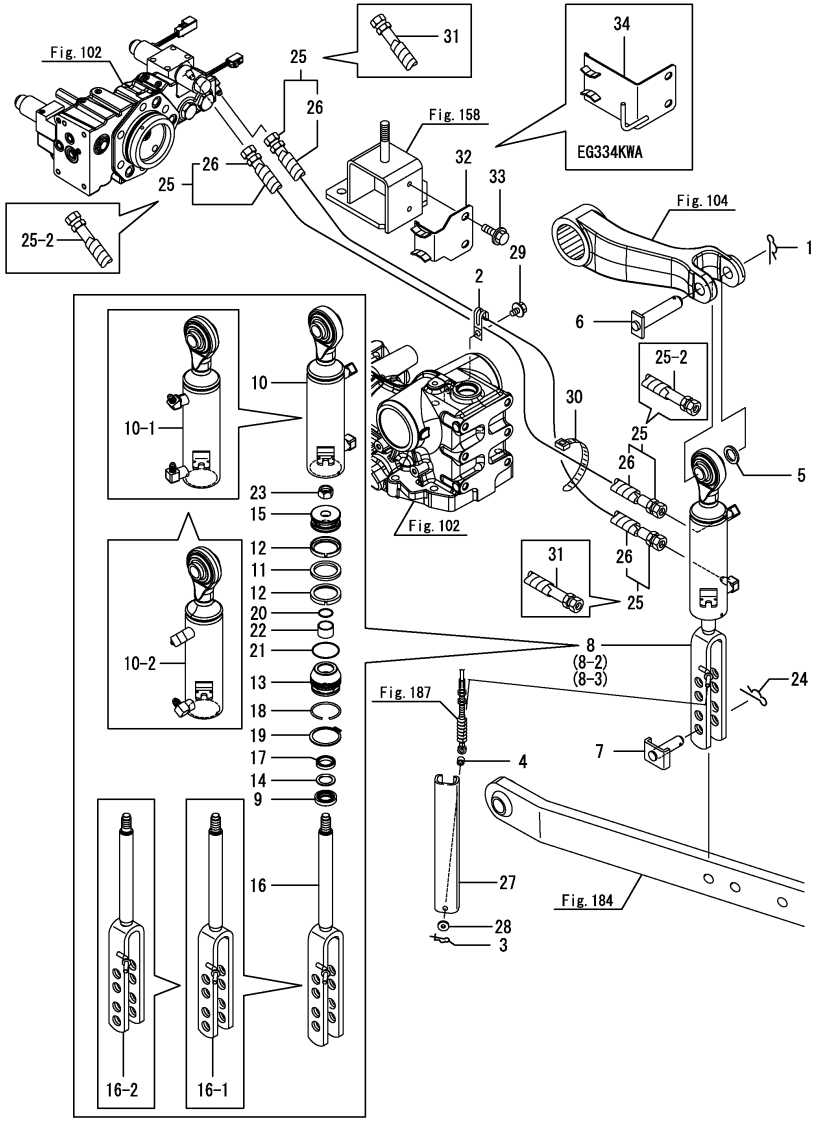

Remarks
* Applied to the following models.
EG326, EG328, EG330, EG334
EG334KWA
(1)Full length = No.25 : 850mm, No.25-1 : 750mm.
(2)Exclusive parts for EG334KWA models.

(A)=EG326Y (D)=EG334Y
(B)=EG328Y (E)=
(C)=EG330Y (F)=

No.	Lev.	Parts No.	Description	Q'ty (A)	(B)	(C)	(D)	(E)	(F)	I	R
1	1	195184-15360	PIN, SNAP 19	1	1	1	1				
2	1	194440-51620	CLAMP	1	1	1	1			Z	
	(A=F090524)	(B=F080428)	(C=F071156) (D=F061074)								
3	1	1C6281-52310	PIN, SNAP 6	1	1	1	1				
4	1	198220-62220	COLLAR	1	1	1	1				
5	1	194640-72420	WASHER, 19X28X1	1	1	1	1				
6	1	1A7180-72450	PIN, ARM	1	1	1	1				
6-1	1	1A7180-72451	PIN, LIFT ARM	1	1	1	1			N	
	(A=F090204)	(B=F080194)	(C=F070410) (D=F060393)								
7	1	1A7180-72550	PIN, LIFT YOKE	1	1	1	1				
8	1	1A7140-72800	CYLINDER, LIFT	1	1	1	1				
8-1	1	1A7140-72601	CYLINDER UNIT, LIFT	1	1	1	1			R	
	(A=F090144)	(B=F080140)	(C=F070272) (D=F060261)								
8-2	1	1A7140-72602	CYLINDER UNIT, LIFT	1	1	1	1			S	
	(A=F090462)	(B=F080371)	(C=F070944) (D=F060785)								
8-3	1	1A7150-72600	CYLINDER UNIT, UFO	1	1	1	1			S	
	(A=F090524)	(B=F080428)	(C=F071156) (D=F061074)								
9	2	198475-36810	SEAL, DUST 20	1	1	1	1				
10	2	1A7140-72621	TUBE ASSY, CYLINDER	1	1	1	1				
10-1	2	1A7160-72623	TUBE ASSY, CYLINDER	1	1	1	1			S	
	(A=F090462)	(B=F080371)	(C=F070944) (D=F060785)								
10-2	2	1A7190-72620	TUBE ASSY, CYLINDER	1	1	1	1			S	
	(A=F090524)	(B=F080428)	(C=F071156) (D=F061074)								
11	2	198480-72680	PACKING, SEAL	1	1	1	1				
12	2	198480-72690	BEARING, SEAL PWL45	2	2	2	2				
13	2	1A7260-72711	CAP, CYLINDER	1	1	1	1				
14	2	1A7260-72730	RING, BACK UP	1	1	1	1				
15	2	1A7260-72750	PISTON, CYLINDER	1	1	1	1				
16	2	1A7140-72860	ROD ASSY	1	1	1	1				
16-1	2	1A7140-72761	ROD ASSY	1	1	1	1			S	
	(A=F090144)	(B=F080140)	(C=F070272) (D=F060261)								
16-2	2	1A7140-72762	ROD ASSY	1	1	1	1			S	
	(A=F090462)	(B=F080371)	(C=F070944) (D=F060785)								
17	2	198291-72790	PACKING, 20	1	1	1	1				
18	2	22207-045320	RING, 45X3.2	1	1	1	1				
19	2	22242-000420	RING, 42	1	1	1	1				
20	2	24311-000200	O-RING, 1AP20.0	1	1	1	1				
21	2	24315-000390	O-RING, 1BP39.0	1	1	1	1				
22	2	24550-020150	BUSH, 20X15	1	1	1	1				
23	2	26996-140002	NUT, LOCK M14	1	1	1	1				
23-1	2	26356-140002	NUT, M14	1	1	1	1			S	
	(A=F090524)	(B=F080428)	(C=F071156) (D=F061074)								
24	1	1A6150-73700	PIN, SNAP 16	1	1	1	1				
25	1	198361-77380	HOSE ASSY, HYDRAULIC	2	2	2	2				
25-1	1	1A7160-77380	HOSE ASSY, HYDRAULIC	2	2	2	2			S	1
	(A=F090462)	(B=F080371)	(C=F070944) (D=F060785)								
25-2	1	1A7180-77380	HOSE ASSY, HYD	1	1	1	1			S	
	(A=F090524)	(B=F080428)	(C=F071156) (D=F061074)								
26	2	198361-77371	TUBE, PROTECT	2	2	2	2			Z	
	(A=F090462)	(B=F080371)	(C=F070944) (D=F060785)								
27	1	198071-78510	COVER, WIRE	1	1	1	1				

N:Old $\xleftrightarrow[\text{No}]{\text{Yes}}$ New, Q:Old $\xleftrightarrow[\text{Yes}]{\text{No}}$ New, R:Old $\xleftrightarrow[\text{Yes}]{\text{Yes}}$ New, S:Old $\xleftrightarrow[\text{No}]{\text{No}}$ New, W:Add, Z:Discontinued, F:Interchangeable by set, K:Q'ty Change

++ CONTINUE ++

Copyright (C) 2014 YANMAR CO., LTD. All RightsReserved.

Fig.183. LIFTING CYLINDER

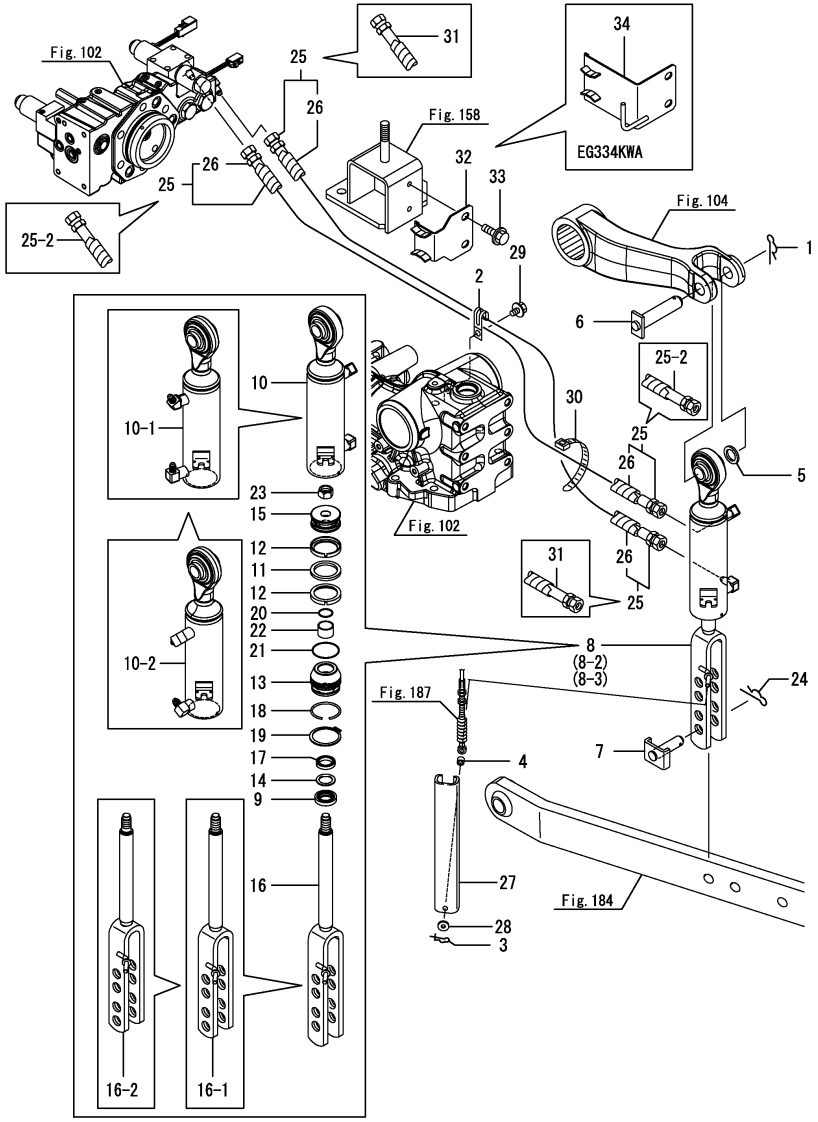

(A)=EG326Y (D)=EG334Y
(B)=EG328Y (E)=
(C)=EG330Y (F)=

No.	Lev.	Parts No.	Description	Q'ty (A)	(B)	(C)	(D)	(E)	(F)	I	R
28	1	22137-060000	WASHER, 6	1	1	1	1				
29	1	26106-080122	BOLT, M8X 12 PLATED	1	1	1	1			Z	
	(A=F090524)	(B=F080428)	(C=F071156) (D=F061074)								
30	1	29622-140001	BAND, RF140	1	1	1	1			W	
	(A=F090462)	(B=F080371)	(C=F070944) (D=F060785)								
31	1	1A7180-77390	HOSE ASSY, HYD	1	1	1	1			W	
	(A=F090524)	(B=F080428)	(C=F071156) (D=F061074)								
32	1	1A7180-77500	CLAMP ASSY, HOSE	1	1	1	1			W	
	(A=F090524)	(B=F080428)	(C=F071156) (D=F061074)								
33	1	26106-100202	BOLT, M10X 20 PLATED	2	2	2	2			W	
	(A=F090524)	(B=F080428)	(C=F071156) (D=F061074)								
34	1	1A7160-77500	CLAMP ASSY, HOSE				1				2

Remarks
* Applied to the following models.
EG326, EG328, EG330, EG334
EG334KWA
(1)Full length = No.25 : 850mm, No.25-1 : 750mm.
(2)Exclusive parts for EG334KWA models.

N:Old $\xleftarrow[\text{No}]{\text{Yes}}$ New, Q:Old $\xleftarrow[\text{Yes}]{\text{No}}$ New, R:Old $\xleftarrow[\text{Yes}]{\text{Yes}}$ New, S:Old $\xleftarrow[\text{No}]{\text{No}}$ New, W:Add, Z:Discontinued, F:Interchangeable by set, K:Q'ty Change

Copyright (C) 2014 YANMAR CO., LTD. All RightsReserved.

Fig.269. LIFTING CYLINDER(A,K,KW)

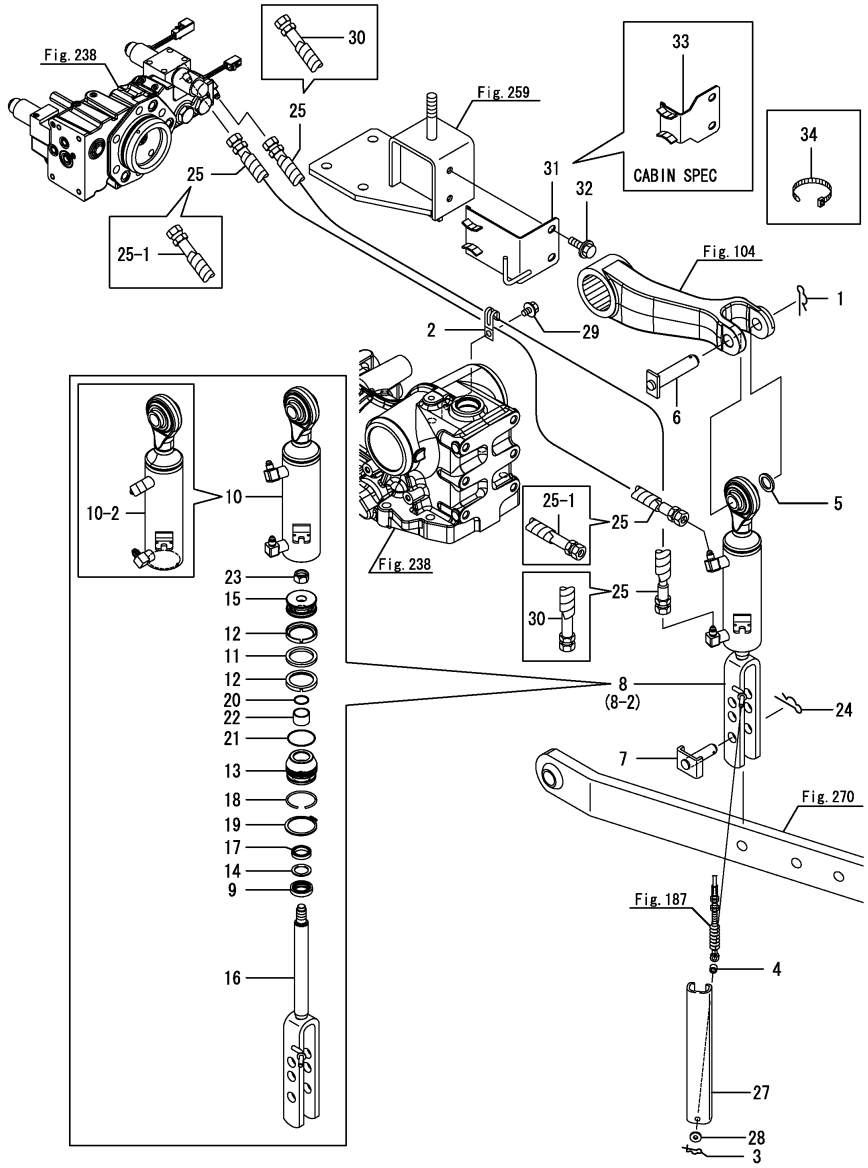

(A)=EG326Y (D)=EG334Y
(B)=EG328Y (E)=
(C)=EG330Y (F)=

No.	Lev.	Parts No.	Description	Q'ty (A)	(B)	(C)	(D)	(E)	(F)	I	R
1	1	195184-15360	PIN, SNAP 19			1	1				
2	1	194440-51620	CLAMP			1	1			Z	
			(C=F071156) (D=F061074)								
3	1	1C6281-52310	PIN, SNAP 6			1	1				
4	1	198220-62220	COLLAR			1	1				
5	1	194640-72420	WASHER, 19X28X1			1	1				
6	1	1A7180-72451	PIN, LIFT ARM			1	1				
7	1	1A7180-72550	PIN, LIFT YOKE			1	1				
8	1	1A7160-72602	CYLINDER UNIT, LIFT			1	1				
8-1	1	1A7160-72603	CYLINDER UNIT, LIFT			1	1			R	
			(C=F070566) (D=F060531)								
8-2	1	1A7170-72600	CYLINDER UNIT, UFO			1	1			S	
			(C=F071156) (D=F061074)								
9	2	198475-36810	SEAL, DUST 20			1	1				
10	2	1A7160-72622	TUBE ASSY, CYLINDER			1	1				
10-1	2	1A7160-72623	TUBE ASSY, CYLINDER			1	1			R	
			(C=F070566) (D=F060531)								
10-2	2	1A7190-72620	TUBE ASSY, CYLINDER			1	1			S	
			(C=F071156) (D=F061074)								
11	2	198480-72680	PACKING, SEAL			1	1				
12	2	198480-72690	BEARING, SEAL PWL45			2	2				
13	2	1A7260-72711	CAP, CYLINDER			1	1				
14	2	1A7260-72730	RING, BACK UP			1	1				
15	2	1A7260-72750	PISTON, CYLINDER			1	1				
16	2	1A7160-72760	ROD ASSY			1	1				
17	2	198291-72790	PACKING, 20			1	1				
18	2	22207-045320	RING, 45X3.2			1	1				
19	2	22242-000420	RING, 42			1	1				
20	2	24311-000200	O-RING, 1AP20.0			1	1				
21	2	24315-000390	O-RING, 1BP39.0			1	1				
22	2	24550-020150	BUSH, 20X15			1	1				
23	2	26996-140002	NUT, LOCK M14			1	1				
23-1	2	26356-140002	NUT, M14			1	1			S	
			(C=F071156) (D=F061074)								
24	1	1A6150-73700	PIN, SNAP 16			1	1				
25	1	1A7160-77380	HOSE ASSY, HYDRAULIC			2	2				
25-1	1	1A7180-77380	HOSE ASSY, HYD			1	1			S	
			(C=F071156) (D=F061074)								
27	1	198071-78510	COVER, WIRE			1	1				
28	1	22137-060000	WASHER, 6			1	1				
29	1	26106-080122	BOLT, M8X 12 PLATED			1	1			Z	
			(C=F071156) (D=F061074)								
30	1	1A7180-77390	HOSE ASSY, HYD			1	1			W	
			(C=F071156) (D=F061074)								
31	1	1A7160-77500	CLAMP ASSY, HOSE			1	1			W	1
			(C=F071156) (D=F061075)								
32	1	26106-100202	BOLT, M10X 20 PLATED			2	2			W	
			(C=F071156) (D=F061075)								
33	1	1A7180-77500	CLAMP ASSY, HOSE			1	1			W	2
			(C=F071156) (D=F061075)								
34	1	29622-140001	BAND, RF140			1	1			W	

N:Old $\overset{\text{Yes}}{\underset{\text{No}}{\leftrightarrow}}$ New, Q:Old $\overset{\text{No}}{\underset{\text{Yes}}{\leftrightarrow}}$ New, R:Old $\overset{\text{Yes}}{\underset{\text{Yes}}{\leftrightarrow}}$ New, S:Old $\overset{\text{No}}{\underset{\text{No}}{\leftrightarrow}}$ New, W:Add, Z:Discontinued, F:Interchangeable by set, K:Q'ty Change

Remarks
* Applied to the following models.
EG330A, EG330K, EG330KW, EG334A, EG334KW
(1)Exclusive parts for Rops specification.
(2)Exclusive parts for Cabin specification.

++ CONTINUE ++

Copyright (C) 2014 YANMAR CO., LTD. All RightsReserved.

Fig.269. LIFTING CYLINDER(A,K,KW)

(A)=EG326Y (D)=EG334Y
(B)=EG328Y (E)=
(C)=EG330Y (F)=

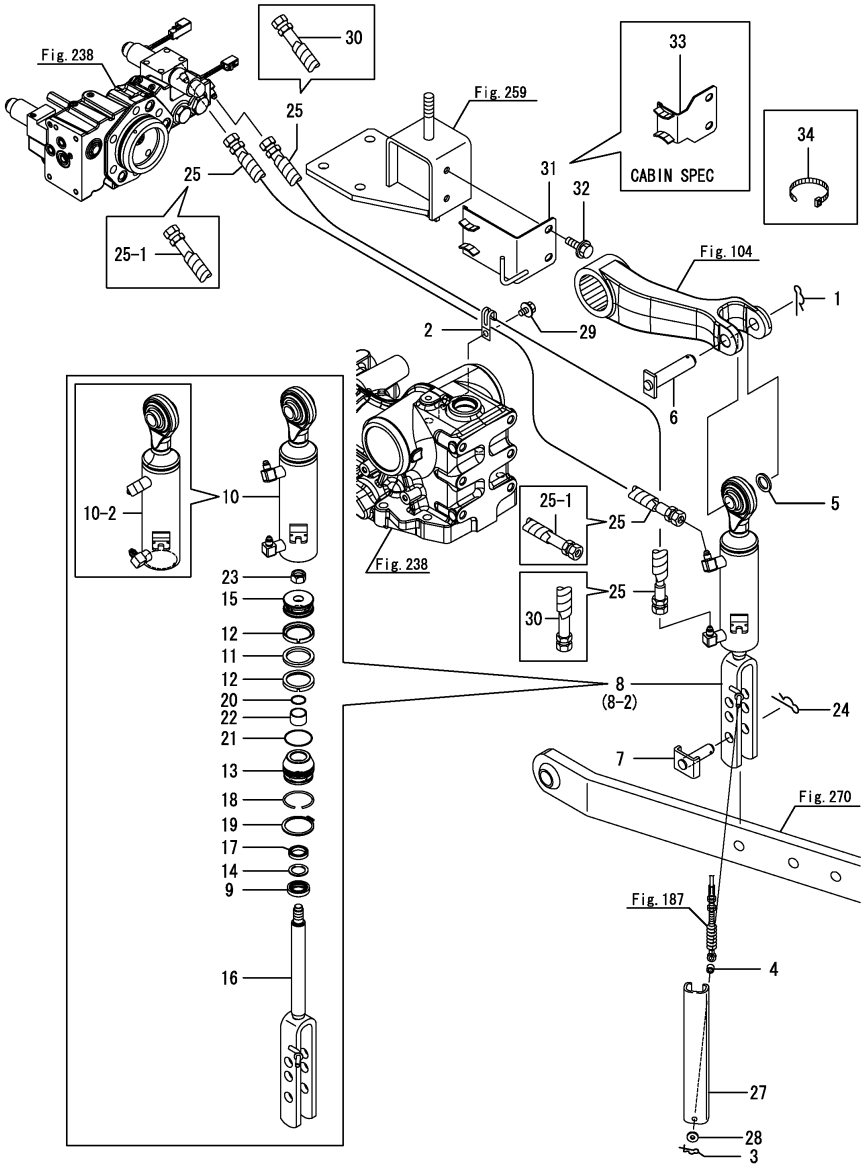

No.	Lev.	Parts No.	Description	Q'ty (A)	(B)	(C)	(D)	(E)	(F)	I	R
			(C=F071156) (D=F061074)								

Remarks
* Applied to the following models.
EG330A, EG330K, EG330KW, EG334A, EG334KW
(1)Exclusive parts for Rops specification.
(2)Exclusive parts for Cabin specification.

N:Old ←Yes/No→ New, Q:Old ←No/Yes→ New, R:Old ←Yes/Yes→ New, S:Old ←No/No→ New, W:Add, Z:Discontinued, F:Interchangeable by set, K:Q'ty Change

Copyright (C) 2014 YANMAR CO., LTD. All RightsReserved.

Fig.184. LOWER LINK & CHECK CHAIN

(A)=EG326Y
(B)=EG328Y
(C)=EG330Y
(D)=EG334Y
(E)=
(F)=

No.	Lev.	Parts No.	Description	Q'ty (A)	(B)	(C)	(D)	(E)	(F)	I	R
1	1	794130-71410	PIN ASSY, BALL	2	2	2	2				
2	1	1A7140-73100	LINK ASSY, LOWER	2	2	2	2				
3	2	1A7140-73500	LINK ASSY, LOWER	2	2	2	2				
4	2	1A7140-74200	CHAIN ASSY, CHECK	2	2	2	2				
5	3	1A6150-73700	PIN, SNAP 16	2	2	2	2				
6	3	1A7140-74210	CHAIN ASSY, CHECK F	2	2	2	2				
7	3	1A7140-74250	CHAIN ASSY, CHECK R	2	2	2	2				
8	3	198181-74620	SHACKLE	2	2	2	2				
9	3	198181-74630	PIN, CHAIN	2	2	2	2				
10	3	198181-74670	TURNBUCKLE	2	2	2	2				
11	3	194145-75250	RING, STOPPER	2	2	2	2				
12	3	22217-160000	WASHER, SPRING 16	2	2	2	2				
13	3	26737-160002	NUT, M16	2	2	2	2				
14	1	194145-73150	SPRING, LOCK	1	1	1	1				

Remarks
* Applied to the following models.
EG326, EG328, EG330, EG334
EG334KWA

N:Old ◄Yes/No► New, Q:Old ◄No/Yes► New, R:Old ◄Yes/Yes► New, S:Old ◄No/No► New, W:Add, Z:Discontinued, F:Interchangeable by set, K:Q'ty Change

Copyright (C) 2014 YANMAR CO., LTD. All RightsReserved.

Fig.270. LOWER LINK & CHECK CHAIN(A,K,KW)

(A)=EG326Y
(B)=EG328Y
(C)=EG330Y
(D)=EG334Y
(E)=
(F)=

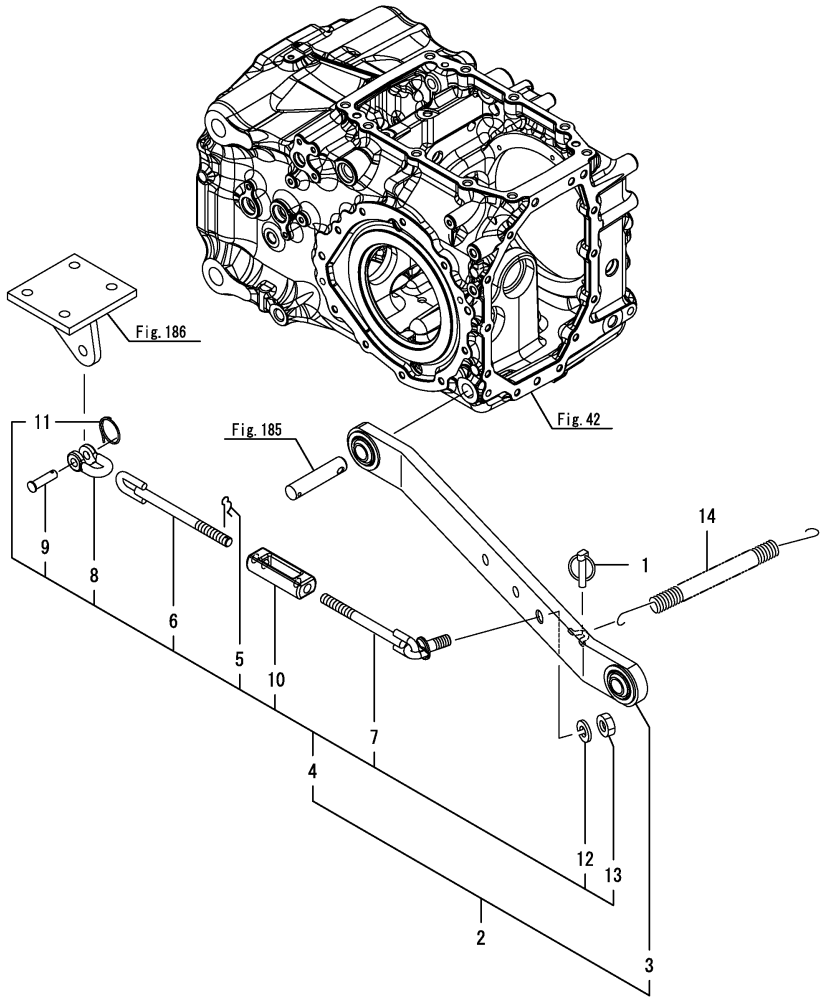

No.	Lev.	Parts No.	Description	Q'ty (A)	(B)	(C)	(D)	(E)	(F)	I	R
1	1	794130-71410	PIN ASSY, BALL			2	2				
2	1	1A7160-73100	LINK & CHAIN KIT,			2	2				
3	2	1A7160-73500	LINK ASSY, LOWER			2	2				
4	2	1A7140-74200	CHAIN ASSY, CHECK			2	2				
5	3	1A6150-73700	PIN, SNAP 16			2	2				
6	3	1A7140-74210	CHAIN ASSY, CHECK F			2	2				
7	3	1A7140-74250	CHAIN ASSY, CHECK R			2	2				
8	3	198181-74620	SHACKLE			2	2				
9	3	198181-74630	PIN, CHAIN			2	2				
10	3	198181-74670	TURNBUCKLE			2	2				
11	3	194145-75250	RING, STOPPER			2	2				
12	3	22217-160000	WASHER, SPRING 16			2	2				
13	3	26737-160002	NUT, M16			2	2				
14	1	194145-73150	SPRING, LOCK			1	1				

Remarks
* Applied to the following models.
EG330A, EG330K, EG330KW, EG334A, EG334KW

N:Old $\frac{\text{Yes}}{\text{No}}$ New, Q:Old $\frac{\text{No}}{\text{Yes}}$ New, R:Old $\frac{\text{Yes}}{\text{Yes}}$ New, S:Old $\frac{\text{No}}{\text{No}}$ New, W:Add, Z:Discontinued, F:Interchangeable by set, K:Q'ty Change

Copyright (C) 2014 YANMAR CO., LTD. All RightsReserved.

Fig.185. LOWER LINK PIN

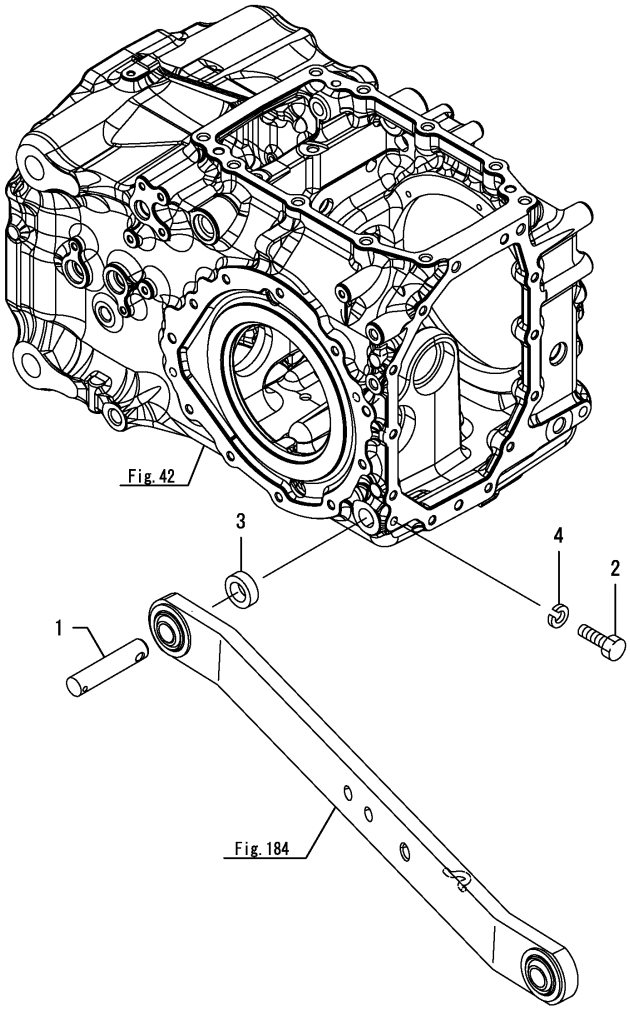

(A)=EG326Y (D)=EG334Y
(B)=EG328Y (E)=
(C)=EG330Y (F)=

No.	Lev.	Parts No.	Description	Q'ty (A)	(B)	(C)	(D)	(E)	(F)	I	R
1	1	1A7180-73150	PIN, LOWER LINK	2	2	2	2				
2	1	1A7180-73160	BOLT, LINK	2	2	2	2				
3	1	1A7180-73170	COLLAR	2	2	2	2				
3-1	1	1A7180-73171	COLLAR 23X38X11	2	2	2	2			N	
	(A=F090377)	(B=F080317)	(C=F070786) (D=F060716)								
4	1	22217-120000	WASHER, SPRING 12	2	2	2	2				

N:Old $\xleftrightarrow[\text{No}]{\text{Yes}}$ New, Q:Old $\xleftrightarrow[\text{Yes}]{\text{No}}$ New, R:Old $\xleftrightarrow[\text{Yes}]{\text{Yes}}$ New, S:Old $\xleftrightarrow[\text{No}]{\text{No}}$ New, W:Add, Z:Discontinued, F:Interchangeable by set, K:Q'ty Change

Copyright (C) 2014 YANMAR CO., LTD. All RightsReserved.

Fig.186. CHECK CHAIN BRACKET

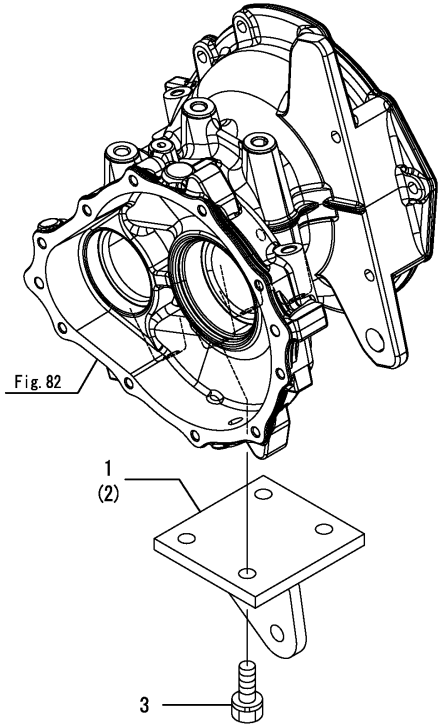

(A)=EG326Y (D)=EG334Y
(B)=EG328Y (E)=
(C)=EG330Y (F)=

No.	Lev.	Parts No.	Description	Q'ty (A)	(B)	(C)	(D)	(E)	(F)	I	R
1	1	1A7140-74100	BRACKET, CHAIN L	1	1	1	1				
2	1	1A7140-74150	BRACKET, CHAIN R	1	1	1	1				
3	1	26013-140352	BOLT, M14X 35	8	8	8	8				

N:Old $\xleftrightarrow[\text{No}]{\text{Yes}}$ New, Q:Old $\xleftrightarrow[\text{Yes}]{\text{No}}$ New, R:Old $\xleftrightarrow[\text{Yes}]{\text{Yes}}$ New, S:Old $\xleftrightarrow[\text{No}]{\text{No}}$ New, W:Add, Z:Discontinued, F:Interchangeable by set, K:Q'ty Change

Copyright (C) 2014 YANMAR CO., LTD. All RightsReserved.

Fig.187. SWING SENSOR

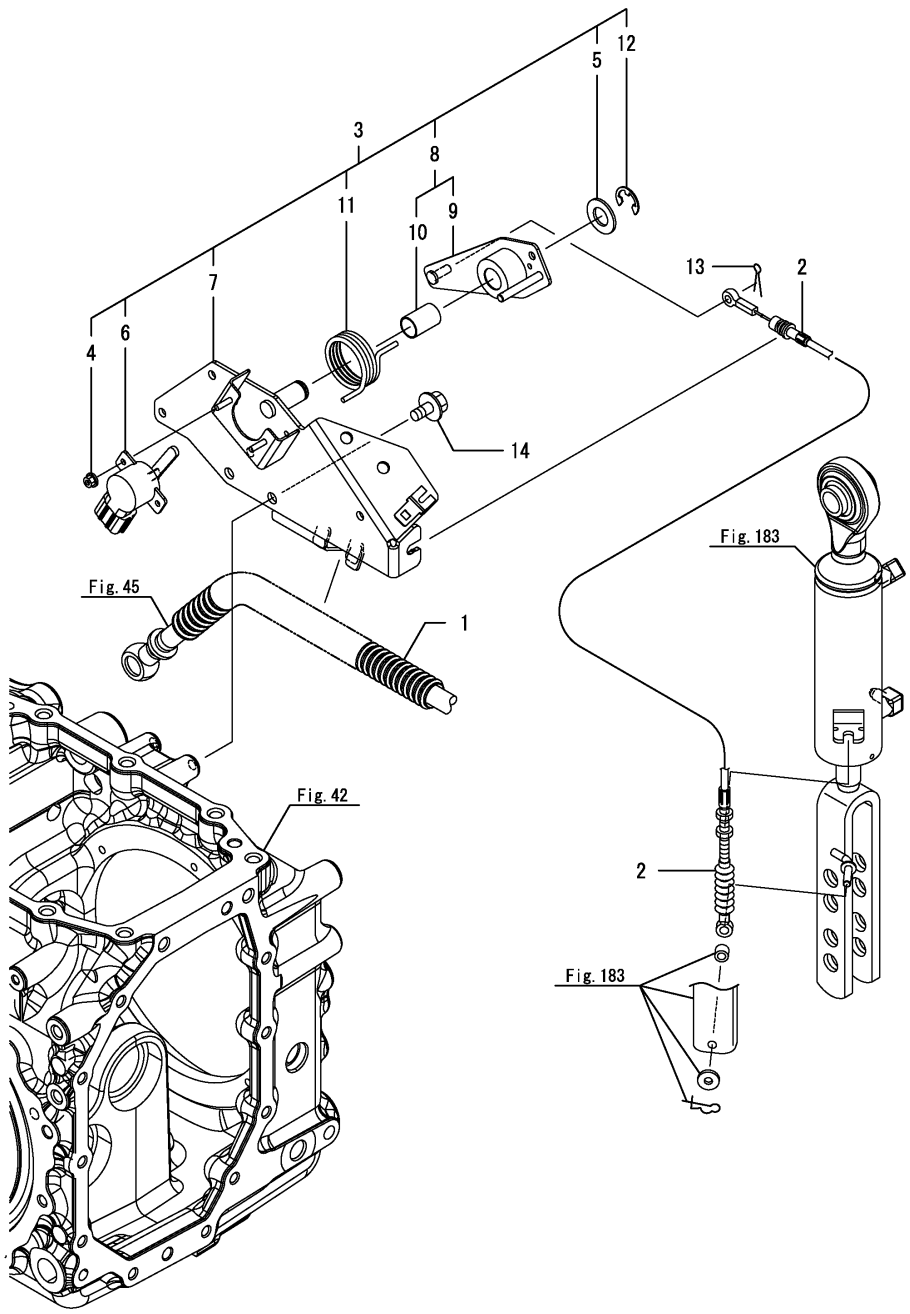

(A)=EG326Y (D)=EG334Y
(B)=EG328Y (E)=
(C)=EG330Y (F)=

No.	Lev.	Parts No.	Description	Q'ty (A)	(B)	(C)	(D)	(E)	(F)	I	R
1	1	1A7180-24600	TUBE, CORRUGATED 19	1	1	1	1				
2	1	1A7180-78280	CABLE	1	1	1	1				
3	1	1A7180-78800	SENSOR, 3P	1	1	1	1				
3-1	1	1A7180-78801	SENSOR UNIT, 3-POINT	1	1	1	1			N	
	(A=F090620)	(B=F080519)	(C=F071436) (D=F061303)								
4	2	194990-22110	NUT, M4	2	2	2	2				
5	2	194550-47910	SPACER, 15X28X2	1	1	1	1				
6	2	1A7180-52810	SENSOR, POTENTIO	1	1	1	1				
7	2	1A7180-78810	BRACKET, SENSOR	1	1	1	1				
7-1	2	1A7180-78811	BRACKET, SENSOR	1	1	1	1			N	
	(A=F090620)	(B=F080519)	(C=F071436) (D=F061303)								
8	2	1A7180-78900	ARM ASSY, SENSOR	1	1	1	1				
9	3	1A7180-78910	ARM, SENSOR	1	1	1	1				
10	3	24550-015250	BUSH, 15X25	1	1	1	1				
11	2	1A7180-78970	SPRING, ARM	1	1	1	1				
12	2	22272-000120	RING, E-12	1	1	1	1				
13	1	22417-160180	PIN, COTTER 1.6X18	1	1	1	1				
14	1	26106-080162	BOLT, M8X 16 PLATED	2	2	2	2				

N:Old $\xleftarrow[\text{No}]{\text{Yes}}$ New, Q:Old $\xleftarrow[\text{Yes}]{\text{No}}$ New, R:Old $\xleftarrow[\text{Yes}]{\text{Yes}}$ New, S:Old $\xleftarrow[\text{No}]{\text{No}}$ New, W:Add, Z:Discontinued, F:Interchangeable by set, K:Q'ty Change

Copyright (C) 2014 YANMAR CO., LTD. All RightsReserved.

Fig.188. CONTROLLER(U.F.O.)

(A)=EG326Y (D)=EG334Y
(B)=EG328Y (E)=
(C)=EG330Y (F)=

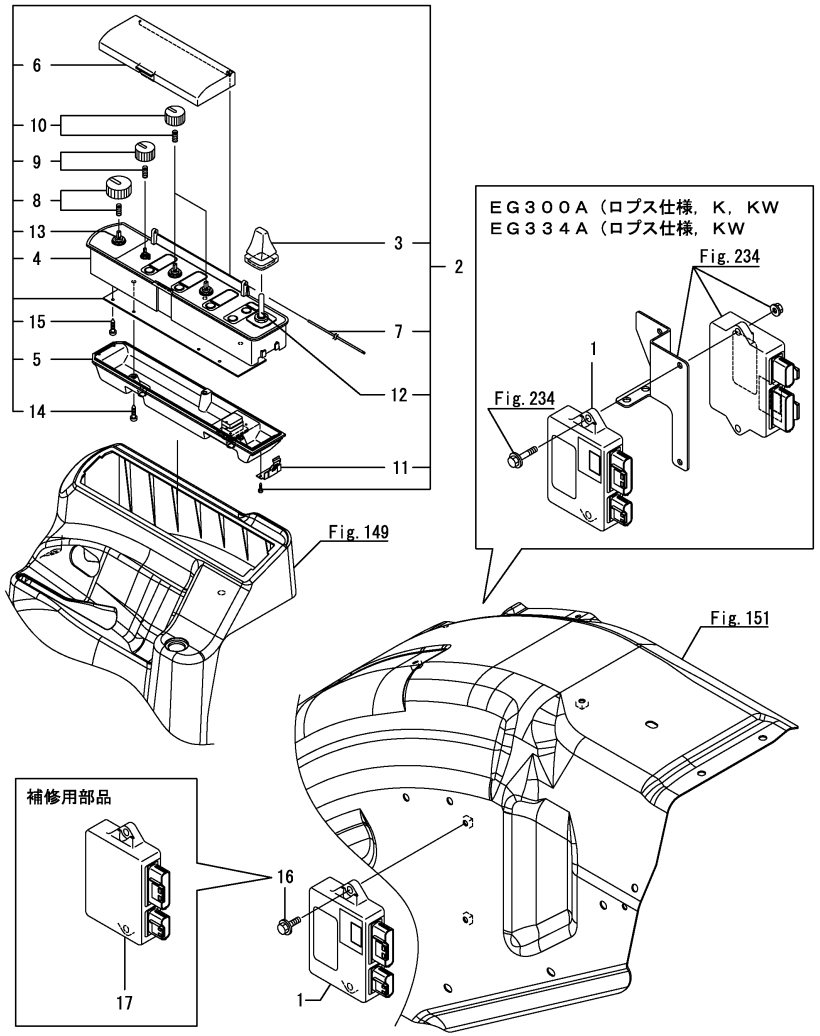

No.	Lev.	Parts No.	Description	Q'ty (A)	(B)	(C)	(D)	(E)	(F)	I	R
1	1	1A8280-50302	CONTROLLER, UFO	1	1	1	1				1
1-1	1	1A8280-50303	CONTROL UNIT, UFO	1	1	1	1			N	1
	(A=F090263)	(B=F080240)	(C=F070528)	(D=F060496)							
1-2	1	1A8280-50304	CONTROL UNIT, UFO	1	1	1	1			N	1
	(A=F090706)	(B=F080594)	(C=F071251)	(D=F061080)							
1-3	1	1A7185-50300	CONTROL UNIT, UFO	1	1	1	1			S	1
	(A=F090706)	(B=F080594)	(C=F071251)	(D=F061080)							
1-4	1	1A7185-50301	CONTROL UNIT, UFO	1	1	1	1			S	1
	(A=F090743)	(B=F080612)	(C=F071769)	(D=F061592)							
2	1	1A8280-78311	BOX, CONTROL	1	1	1	1				
3	2	1A6382-52530	COVER, SWITCH	1	1	1	1				
4	2	1A8280-78410	CASE ASSY	1	1	1	1				
5	2	1A8280-78420	COVER ASSY, 2	1	1	1	1				
6	2	1A8280-78430	COVER, 1	1	1	1	1				
7	2	1A8280-78440	SHAFT	2	2	2	2				
8	2	1A8280-78450	KNOB ASSY, SWITCH 1	1	1	1	1				
9	2	1A8280-78460	KNOB ASSY, SWITCH 2	1	1	1	1				
10	2	1A8280-78470	KNOB ASSY, SWITCH 3	2	2	2	2				
11	2	1A8280-78490	SPRING	2	2	2	2				
12	2	1A8280-78510	SWITCH ASSY, TOGGLE	1	1	1	1				
13	2	1A8280-78520	SWITCH ASSY, VOLUME	1	1	1	1				
14	2	198133-78680	SCREW, M3X14	3	3	3	3				
15	2	198133-78680	SCREW, M3X14	6	6	6	6				
16	1	26106-060202	BOLT, M6X 20 PLATED	2	2	2	2				
17	1	1A8280-50900	CONTROL-UNIT,SERVICE	1	1	1	1				2

Remarks
(1)Eco Controler
This part cannot be ordered.
Replace the part using a Service controler with the proper tractor information installed.
(2)Service Controler
If the proper information is notinstalled, the tractor will not operate.
To install proper information, go to an authorized Distributor.

N:Old ◄Yes/No► New, Q:Old ◄No/Yes► New, R:Old ◄Yes/Yes► New, S:Old ◄No/No► New, W:Add, Z:Discontinued, F:Interchangeable by set, K:Q'ty Change

Copyright (C) 2014 YANMAR CO., LTD. All RightsReserved.

Fig.189. LIFT SENSOR

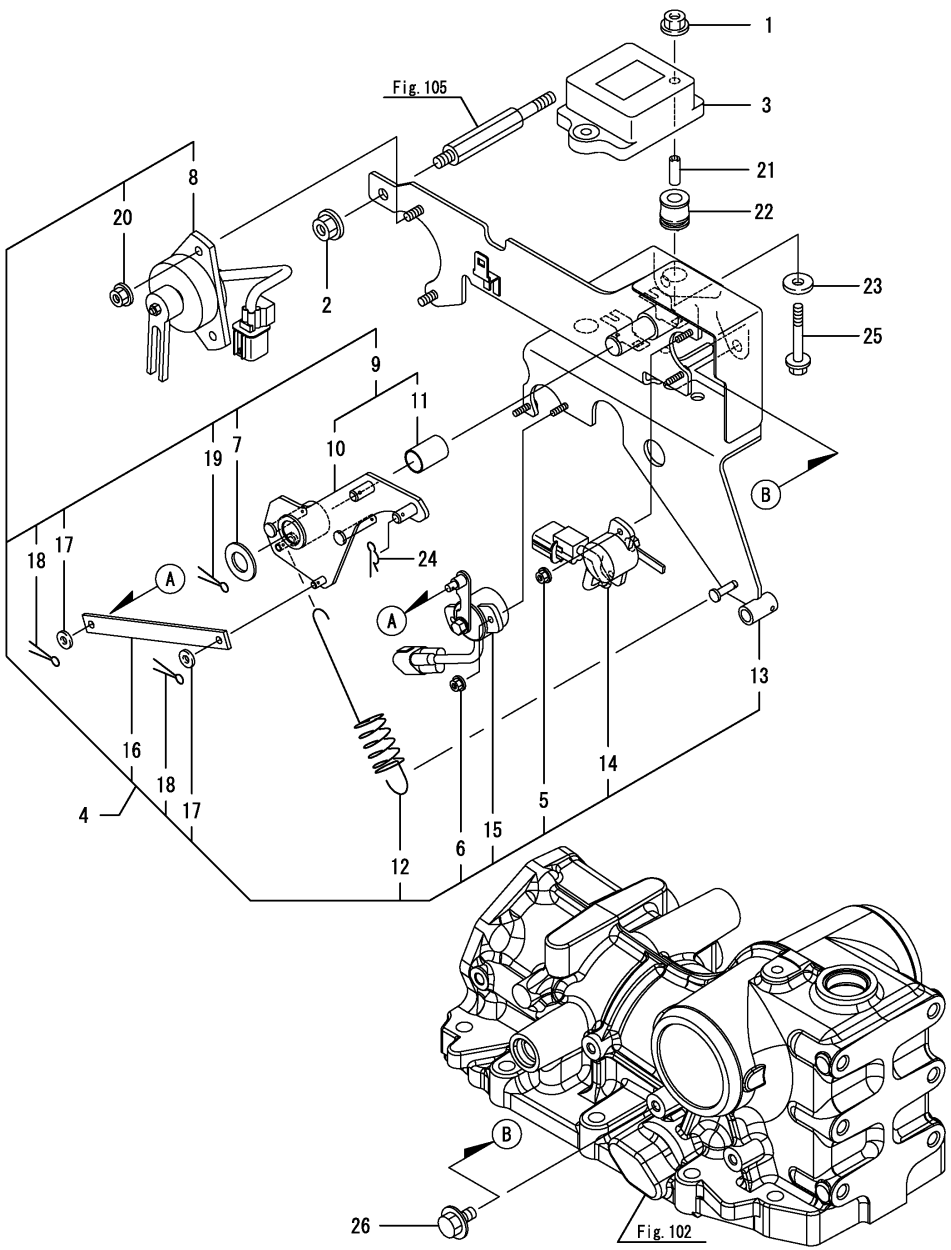

(A)=EG326Y (D)=EG334Y
(B)=EG328Y (E)=
(C)=EG330Y (F)=

No.	Lev.	Parts No.	Description	Q'ty (A)	(B)	(C)	(D)	(E)	(F)	I	R
1	1	194990-22130	NUT, M6	2	2	2	2			Z	
	(A=F090524)	(B=F080428)	(C=F071156) (D=F061075)								
2	1	194990-22140	NUT, M8	1	1	1	1				
3	1	1A7260-78150	SENSOR, SLOPE	1	1	1	1			Z	
	(A=F090524)	(B=F080428)	(C=F071156) (D=F061075)								
4	1	1A7180-78190	SENSOR, LIFT	1	1	1	1				
5	2	194990-22110	NUT, M4	2	2	2	2				
6	2	194990-22110	NUT, M4	2	2	2	2				
7	2	194550-47910	SPACER, 15X28X2	1	1	1	1				
8	2	198448-52250	SWITCH, PTO LEVER	1	1	1	1				
9	2	1A7180-78200	LINK ASSY, FEEDBACK	1	1	1	1				
10	3	1A7180-78210	LINK, FEEDBACK	1	1	1	1				
11	3	24550-015250	BUSH, 15X25	1	1	1	1				
12	2	1A7180-78260	SPRING, RETURN	1	1	1	1				
13	2	1A7180-78530	BRACKET ASSY, SENSOR	1	1	1	1				
14	2	198448-78560	SENSOR, LIFT ANGLE	1	1	1	1				
15	2	198360-78571	SENSOR, COVER F	1	1	1	1				
16	2	1A7180-78880	PLATE	1	1	1	1				
17	2	22137-050000	WASHER, 5	2	2	2	2				
18	2	22417-160180	PIN, COTTER 1.6X18	2	2	2	2				
19	2	22417-250250	PIN, COTTER 2.5X25	1	1	1	1				
20	2	26367-060002	NUT, M6	2	2	2	2				
21	1	198200-78710	COLLAR, 6.5X21X2	2	2	2	2			Z	
	(A=F090524)	(B=F080428)	(C=F071156) (D=F061075)								
22	1	198200-78730	MOUNT, SENSOR 45	2	2	2	2			Z	
	(A=F090524)	(B=F080428)	(C=F071156) (D=F061075)								
23	1	22157-060000	WASHER, 6	2	2	2	2			Z	
	(A=F090524)	(B=F080428)	(C=F071156) (D=F061075)								
24	1	22372-080000	PIN, SNAP 8	1	1	1	1				
25	1	26106-060452	BOLT, M6X 45 PLATED	2	2	2	2			Z	
	(A=F090524)	(B=F080428)	(C=F071156) (D=F061075)								
26	1	26106-080162	BOLT, M8X 16 PLATED	2	2	2	2				

N:Old $\xleftarrow[\text{No}]{\text{Yes}}$ New, Q:Old $\xleftarrow[\text{Yes}]{\text{No}}$ New, R:Old $\xleftarrow[\text{Yes}]{\text{Yes}}$ New, S:Old $\xleftarrow[\text{No}]{\text{No}}$ New, W:Add, Z:Discontinued, F:Interchangeable by set, K:Q'ty Change

Copyright (C) 2014 YANMAR CO., LTD. All RightsReserved.

Fig.284. DRAWBAR HITCH(KWA)

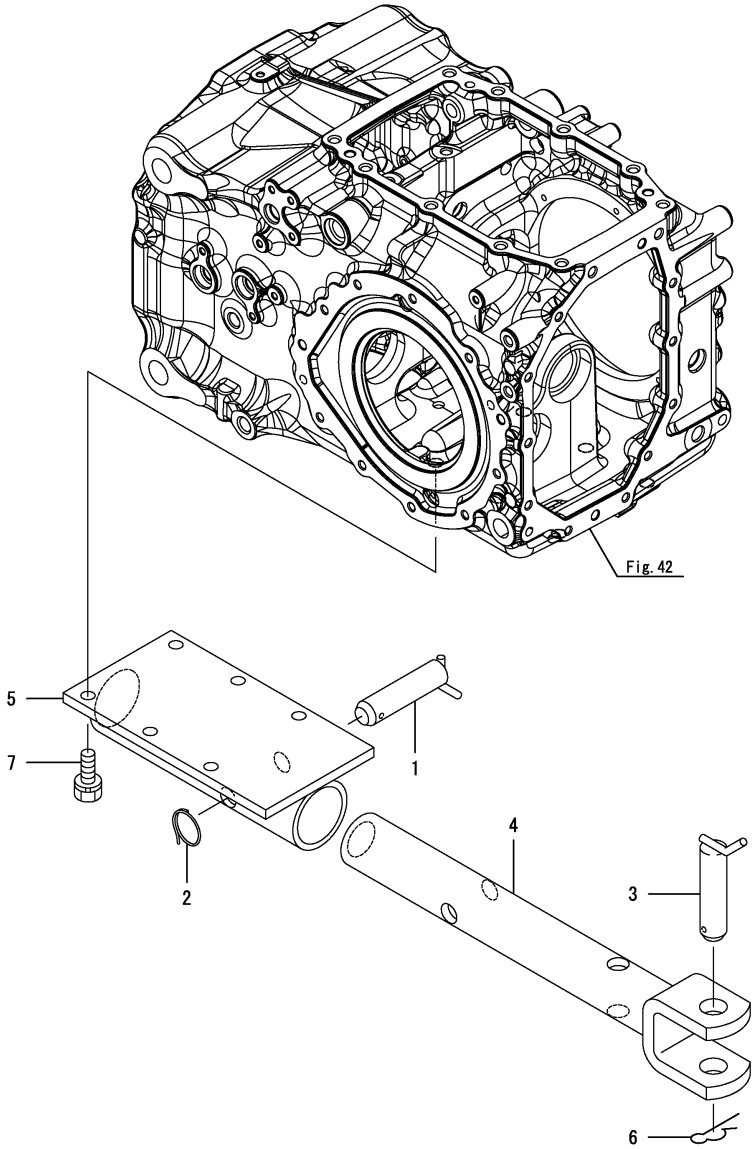

(A)=EG326Y (D)=EG334Y
(B)=EG328Y (E)=
(C)=EG330Y (F)=

No.	Lev.	Parts No.	Description	Q'ty (A)	(B)	(C)	(D)	(E)	(F)	I	R
1	1	194145-75240	PIN, HITCH 22				1				
2	1	194145-75250	RING, STOPPER				1				
3	1	194130-75430	PIN, HITCH 28X98				1				
4	1	198091-75710-1	HITCH, DRAWBAR				1				
5	1	1A7140-75750	BRACKET ASSY				1				
5-1	1	1A7140-75751	BRACKET ASSY,DRAWBAR				1			R	
			(D=F060785)								
6	1	194080-75790	PIN, SNAP 28				1				
7	1	26013-140352	BOLT, M14X 35				6				

Remarks
* Applied to the following models.
EG334KWA

N:Old $\frac{\text{Yes}}{\text{No}}$ New, Q:Old $\frac{\text{No}}{\text{Yes}}$ New, R:Old $\frac{\text{Yes}}{\text{Yes}}$ New, S:Old $\frac{\text{No}}{\text{No}}$ New, W:Add, Z:Discontinued, F:Interchangeable by set, K:Q'ty Change

Copyright (C) 2014 YANMAR CO., LTD. All RightsReserved.

Fig.286. SENSOR(SLOPE)

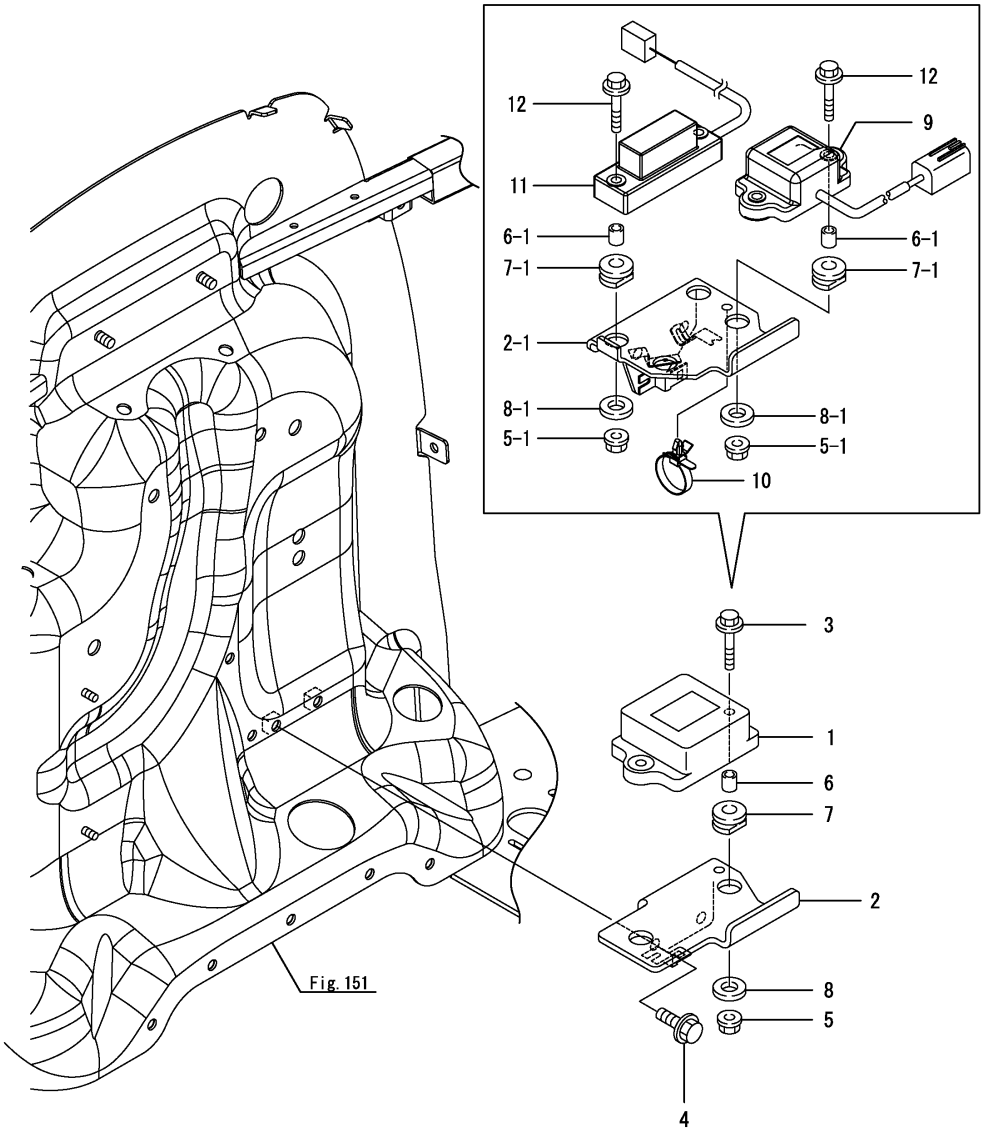

(A)=EG326Y (D)=EG334Y
(B)=EG328Y (E)=
(C)=EG330Y (F)=

No.	Lev.	Parts No.	Description	Q'ty (A)	(B)	(C)	(D)	(E)	(F)	I	R
1	1	1A7260-78150	SENSOR, SLOPE	1	1	1	1			W	
	(A=F090524)	(B=F080428)	(C=F071156) (D=F061075)								
1-1	1	1A7260-78150	SENSOR, SLOPE	1	1	1	1			Z	
	(A=F090860)	(B=F080714)	(C=F072128) (D=F061985)								
2	1	1A7180-78770	BRACKET ASSY, SENCER	1	1	1	1			W	
	(A=F090524)	(B=F080428)	(C=F071156) (D=F061075)								
2-1	1	1A7180-78740	BRACKET ASSY, SENSOR	1	1	1	1			S	
	(A=F090860)	(B=F080714)	(C=F072128) (D=F061985)								
3	1	26106-060352	BOLT, M6X 35 PLATED	2	2	2	2			W	
	(A=F090524)	(B=F080428)	(C=F071156) (D=F061075)								
3-1	1	26106-060352	BOLT, M6X 35 PLATED	2	2	2	2			Z	
	(A=F090860)	(B=F080714)	(C=F072128) (D=F061985)								
4	1	26106-080162	BOLT, M8X 16 PLATED	2	2	2	2			W	
	(A=F090524)	(B=F080428)	(C=F071156) (D=F061075)								
5	1	194990-22130	NUT, M6	2	2	2	2			W	
	(A=F090524)	(B=F080428)	(C=F071156) (D=F061075)								
5-1	1	194990-22130	NUT, M6	4	4	4	4			K	
	(A=F090860)	(B=F080714)	(C=F072128) (D=F061985)								
6	1	1A7260-78700	SPACER, 11.3	2	2	2	2			W	
	(A=F090524)	(B=F080428)	(C=F071156) (D=F061075)								
6-1	1	1A7260-78700	SPACER, 11.3	4	4	4	4			K	
	(A=F090860)	(B=F080714)	(C=F072128) (D=F061985)								
7	1	198129-78720	GROMMET, 10-16	2	2	2	2			W	
	(A=F090524)	(B=F080428)	(C=F071156) (D=F061075)								
7-1	1	198129-78720	GROMMET, 10-16	4	4	4	4			K	
	(A=F090860)	(B=F080714)	(C=F072128) (D=F061985)								
8	1	22157-060000	WASHER, 6	2	2	2	2			W	
	(A=F090524)	(B=F080428)	(C=F071156) (D=F061075)								
8-1	1	22157-060000	WASHER, 6	4	4	4	4			K	
	(A=F090860)	(B=F080714)	(C=F072128) (D=F061985)								
9	1	1C7200-07101	SENSOR, ANGUL SPEED	1	1	1	1			W	
	(A=F090860)	(B=F080714)	(C=F072128) (D=F061985)								
10	1	194680-51670	BAND, CLIP	1	1	1	1			W	
	(A=F090860)	(B=F080714)	(C=F072128) (D=F061985)								
11	1	1A7870-78110	SENSOR, SWING	1	1	1	1			W	
	(A=F090860)	(B=F080714)	(C=F072128) (D=F061985)								
12	1	26106-060402	BOLT, M6X 40 PLATED	4	4	4	4			W	
	(A=F090860)	(B=F080714)	(C=F072128) (D=F061985)								

N:Old $\xleftarrow[\text{No}]{\text{Yes}}$ New, Q:Old $\xleftarrow[\text{Yes}]{\text{No}}$ New, R:Old $\xleftarrow[\text{Yes}]{\text{Yes}}$ New, S:Old $\xleftarrow[\text{No}]{\text{No}}$ New, W:Add, Z:Discontinued, F:Interchangeable by set, K:Q'ty Change

Copyright (C) 2014 YANMAR CO., LTD. All RightsReserved.

Fig.190. CABIN FRAME

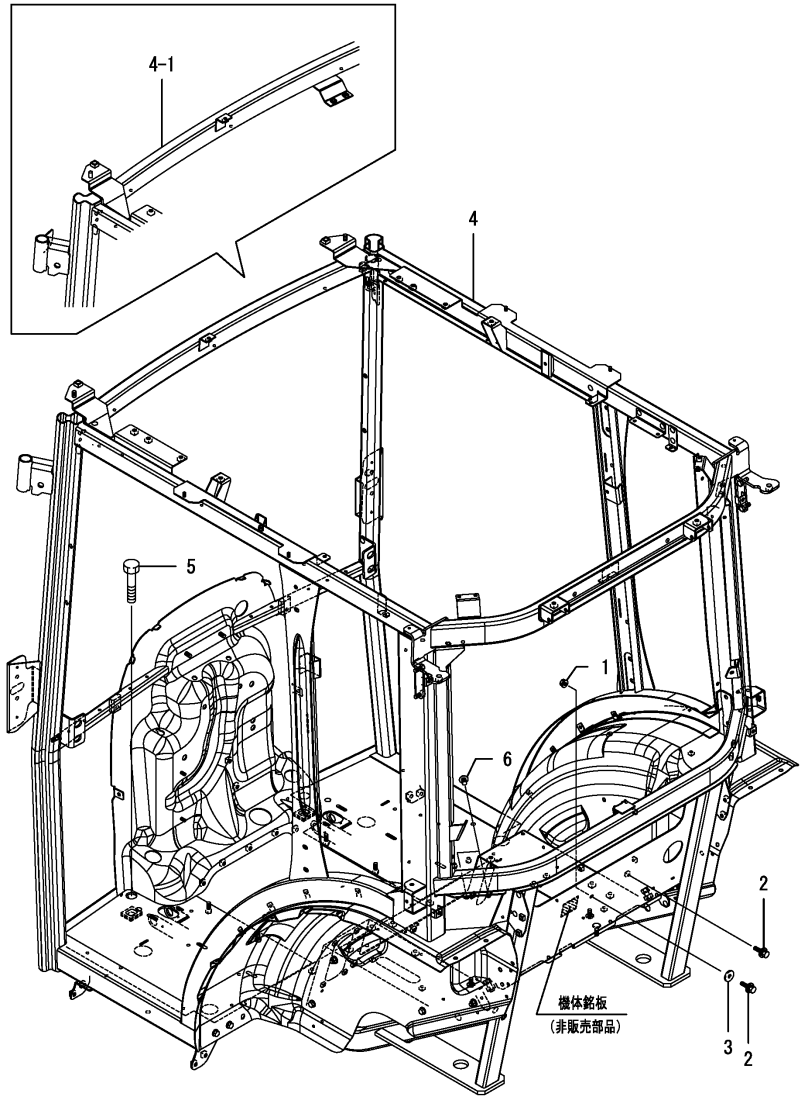

(A)=EG326Y (D)=EG334Y
(B)=EG328Y (E)=
(C)=EG330Y (F)=

No.	Lev.	Parts No.	Description	Q'ty (A)	(B)	(C)	(D)	(E)	(F)	I	R
1	1	194990-22130	NUT, M6	1	1	1	1				
2	1	198072-60590	BOLT, M6X20	2	2	2	2				
3	1	198220-62150	WASHER	1	1	1	1				
4	1	1A7210-80090	FRAME ASSY, CABIN M	1	1	1	1				
4-1	1	1A7210-80091	FRAME M ASSY, CABIN	1	1	1	1			F	1
	(A=F090706)	(B=F080594)	(C=F071251) (D=F061080)								
5	1	26116-140702	BOLT, M14X 70 PLATED	2	2	2	2				
6	1	26589-080122	SCREW, M8	2	2	2	2				

Remarks
(1)Interchangeable by simultaneous replacement with Fig.195 No.7-1,23-1 & Fig.210 No.6-1.

N:Old $\overset{\text{Yes}}{\underset{\text{No}}{\leftrightarrow}}$ New, Q:Old $\overset{\text{No}}{\underset{\text{Yes}}{\leftrightarrow}}$ New, R:Old $\overset{\text{Yes}}{\underset{\text{Yes}}{\leftrightarrow}}$ New, S:Old $\overset{\text{No}}{\underset{\text{No}}{\leftrightarrow}}$ New, W:Add, Z:Discontinued, F:Interchangeable by set, K:Q'ty Change

Copyright (C) 2014 YANMAR CO., LTD. All RightsReserved.

Fig.191. DOOR

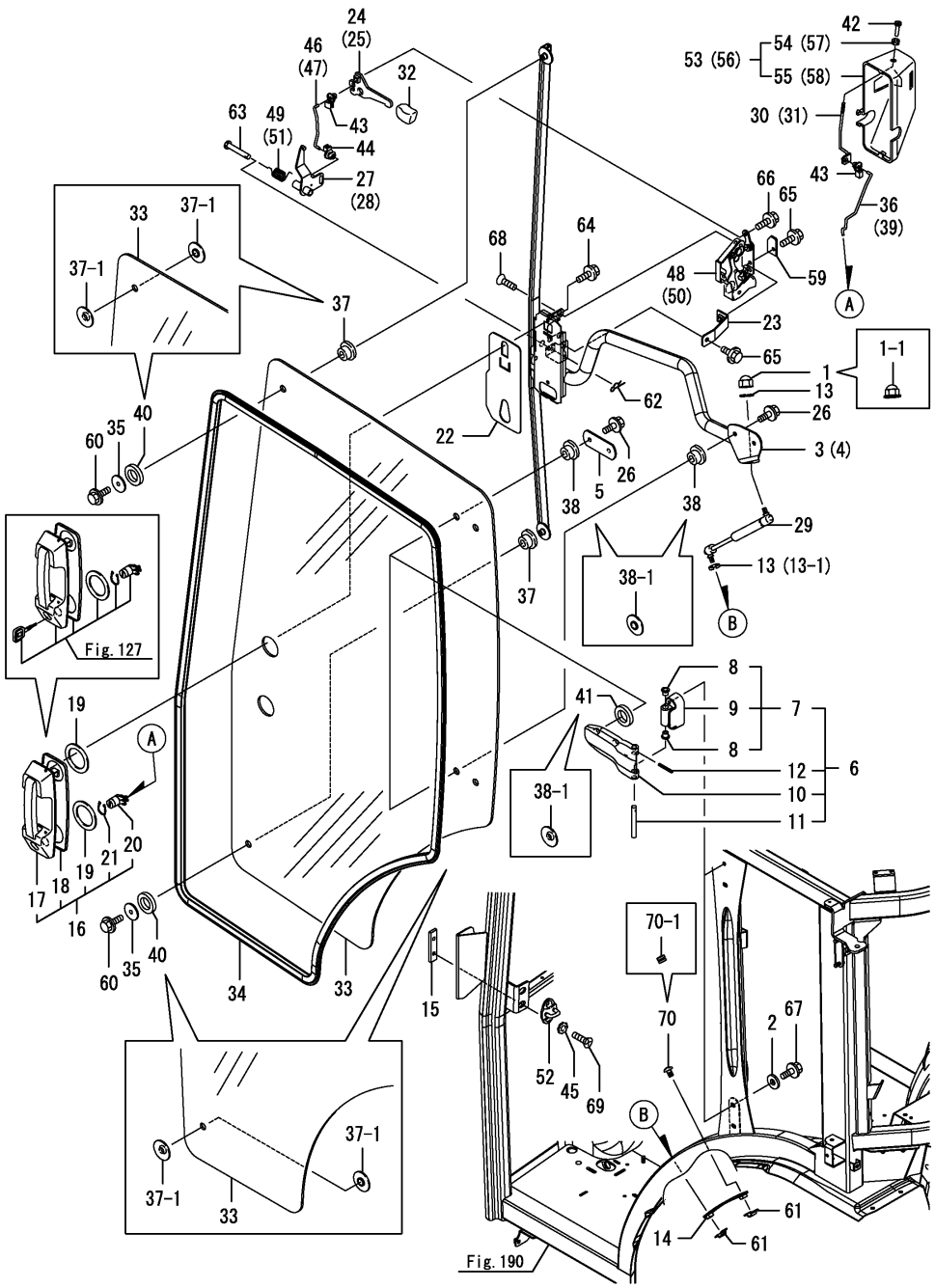

(A)=EG326Y (D)=EG334Y
(B)=EG328Y (E)=
(C)=EG330Y (F)=

No.	Lev.	Parts No.	Description	Q'ty (A)	(B)	(C)	(D)	(E)	(F)	I	R
1	1	194697-47150	NUT, CAP M8	2	2	2	2				
1-1	1	1A8110-83730	NUT, CAP M8	2	2	2	2			S	
	(A=F090716)	(B=F080596)	(C=F071704) (D=F061533)								
2	1	198220-62150	WASHER	8	8	8	8				
3	1	1A7210-82100	FRAME ASSY, DOOR L	1	1	1	1				
4	1	1A7210-82110	FRAME ASSY, DOOR R	1	1	1	1				
5	1	198492-82150	PLATE, DOOR FRAME	2	2	2	2				
6	1	1A8110-82201	HINGE ASSY, DOOR	4	4	4	4				
7	2	1A8110-82221	HINGE ASSY, DOOR B	4	4	4	4				
8	3	1C1011-33990	BUSH, 10	8	8	8	8				
9	3	1A8110-82241	HINGE, DOOR B	4	4	4	4				
10	2	1A8110-82250	HINGE, DOOR A	4	4	4	4				
11	2	198208-82260	PIN, HINGE	4	4	4	4				
12	2	22351-030025	PIN, SPRING 3.0X25	4	4	4	4				
13	1	198268-82270	WASHER, SPRING 8	4	4	4	4				
13-1	1	198268-82270	WASHER, SPRING 8	2	2	2	2			K	
	(A=F090716)	(B=F080596)	(C=F071704) (D=F061533)								
14	1	1A7210-82320	STAY, DOOR DAMPER	2	2	2	2			Z	
	(A=F090108)	(B=F080596)	(C=F070860) (D=F061533)								
15	1	198463-82350	PLATE, DOOR LOCK	2	2	2	2				
16	1	1A7470-82400	HANDLE ASSY, OUTER	2	2	2	2			Z	
	(A=F100093)	(B=F200070)	(C=F300261) (D=F400259)								
17	2	1A7470-82410	BODY, HANDLE	2	2	2	2			Z	
	(A=F100093)	(B=F200070)	(C=F300261) (D=F400259)								
18	2	1A7470-82420	SEAT, OUTER HANDLE	2	2	2	2			Z	
	(A=F100093)	(B=F200070)	(C=F300261) (D=F400259)								
19	2	1A7470-82580	SEAL, DOOR HANDLE	4	4	4	4			Z	
	(A=F100093)	(B=F200070)	(C=F300261) (D=F400259)								
20	2	1A7470-82880	CYLINDER ASSY, KEY	2	2	2	2			Z	
	(A=F100093)	(B=F200070)	(C=F300261) (D=F400259)								
21	2	1A7470-82890	PIN, CYLINDER	2	2	2	2			Z	
	(A=F100093)	(B=F200070)	(C=F300261) (D=F400259)								
22	1	1A7470-82440	PACKING, LATCH COVER	2	2	2	2				
23	1	1A7470-82450	STAY, DOOR LOCK	2	2	2	2				
24	1	1A7470-82471	LEVER, DOOR INSIDE L	1	1	1	1				
25	1	1A7470-82481	LEVER, DOOR INSIDE R	1	1	1	1				
26	1	198093-82510	BOLT, M8X25	8	8	8	8				
27	1	1A7470-82510	LEVER, OPEN L	1	1	1	1				
28	1	1A7470-82520	LEVER, OPEN R	1	1	1	1				
29	1	198463-82550	DAMPER, GAS	2	2	2	2				
29-1	1	198463-82551	DAMPER, GAS 200	2	2	2	2			R	
	(A=F090716)	(B=F080596)	(C=F071704) (D=F061533)								
30	1	1A7470-82560	ROD, INSIDE LOCK L	1	1	1	1				
31	1	1A7470-82570	ROD, INSIDE LOCK R	1	1	1	1				
32	1	198492-82590	KNOB, HANDLE	2	2	2	2				
33	1	1A7210-82610	GLASS, DOOR	2	2	2	2				
34	1	198463-82632	WEATHER-STRIP, 3970	2	2	2	2				
35	1	198255-82640	STAY, PLATE	4	4	4	4				
36	1	1A7470-82640	ROD, CYLINDER L	1	1	1	1				
37	1	198255-82650	RUBBER, CUSHION A	4	4	4	4				
37-1	1	1A8110-82670	RUBBER, CUSHION	8	8	8	8			S	

N:Old $\overset{\text{Yes}}{\underset{\text{No}}{\leftrightarrow}}$ New, Q:Old $\overset{\text{No}}{\underset{\text{Yes}}{\leftrightarrow}}$ New, R:Old $\overset{\text{Yes}}{\underset{\text{Yes}}{\leftrightarrow}}$ New, S:Old $\overset{\text{No}}{\underset{\text{No}}{\leftrightarrow}}$ New, W:Add, Z:Discontinued, F:Interchangeable by set, K:Q'ty Change

++ CONTINUE ++

Copyright (C) 2014 YANMAR CO., LTD. All RightsReserved.

Fig.191. DOOR

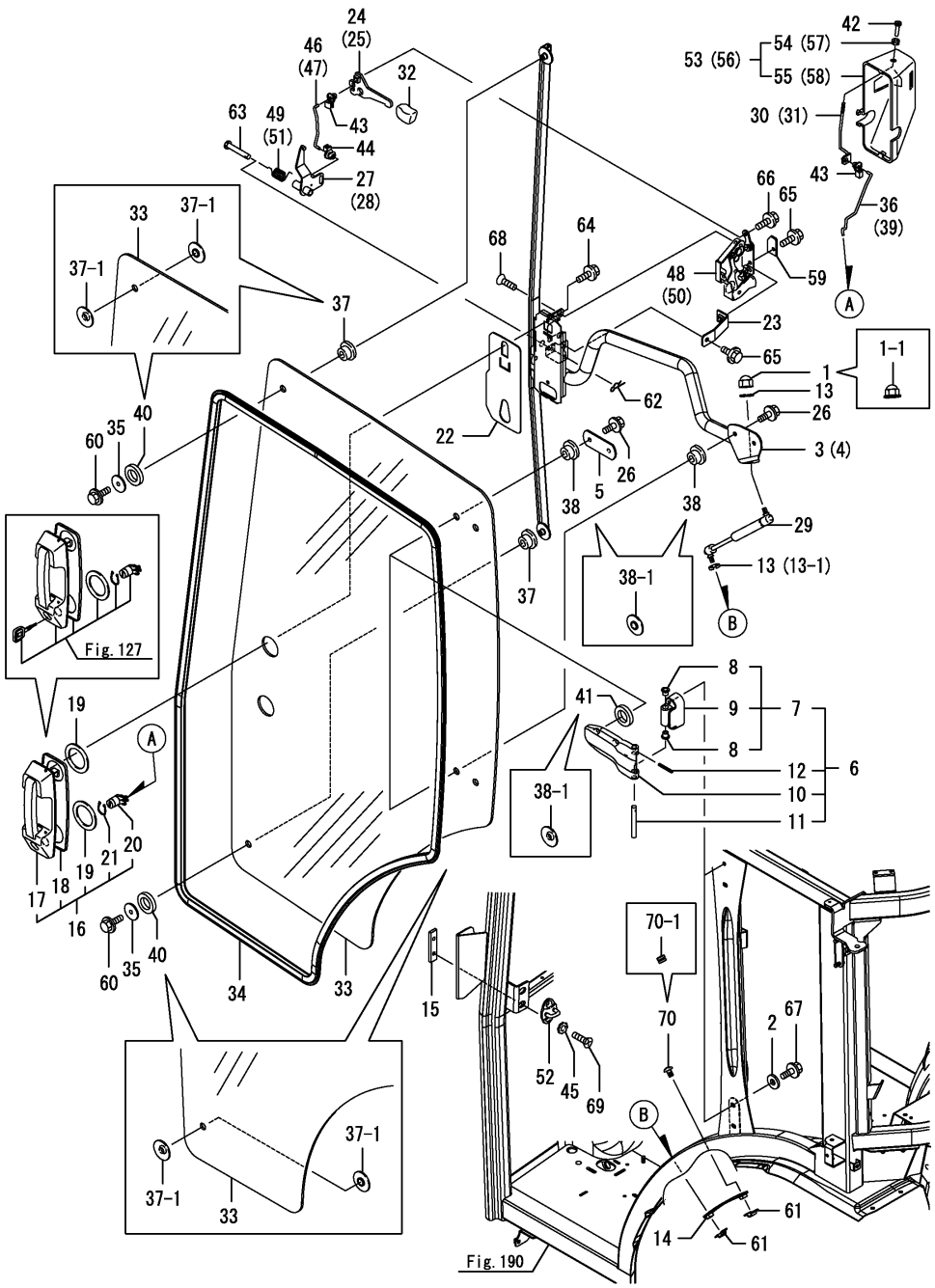

(A)=EG326Y (D)=EG334Y
(B)=EG328Y (E)=
(C)=EG330Y (F)=

No.	Lev.	Parts No.	Description	Q'ty (A)	(B)	(C)	(D)	(E)	(F)	I	R
	(A=F090716)	(B=F080596)	(C=F071704) (D=F061533)								
38	1	198255-82650	RUBBER, CUSHION A	8	8	8	8				
38-1	1	1A8110-82670	RUBBER, CUSHION	16	16	16	16			S	
	(A=F090716)	(B=F080596)	(C=F071704) (D=F061533)								
39	1	1A7470-82650	ROD, CYLINDER R	1	1	1	1				
40	1	198255-82660	RUBBER, CUSHION B	4	4	4	4			Z	
	(A=F090716)	(B=F080596)	(C=F071704) (D=F061533)								
41	1	198255-82660	RUBBER, CUSHION B	8	8	8	8			Z	
	(A=F090716)	(B=F080596)	(C=F071704) (D=F061533)								
42	1	1A7470-82660	KNOB, LOCK	2	2	2	2				
43	1	1A7470-82670	BUSH, LINKAGE	4	4	4	4				
44	1	1A7470-82680	BUSH, LINKAGE	2	2	2	2				
45	1	198255-82701	WASHER, 8	4	4	4	4				
46	1	1A7470-82720	ROD, OPEN LEVER L	1	1	1	1				
47	1	1A7470-82730	ROD, OPEN LEVER R	1	1	1	1				
48	1	1A7320-82750	LOCK ASSY, DOOR L	1	1	1	1				
49	1	1A7470-82750	SPRING, DOOR LOCK L	1	1	1	1				
50	1	1A7320-82760	LOCK ASSY, DOOR R	1	1	1	1				
51	1	1A7470-82760	SPRING, DOOR LOCK R	1	1	1	1				
52	1	1A7320-82770	STRIKER, DOOR LOCK	2	2	2	2				
53	1	1A7470-82800	COVER, LATCH L	1	1	1	1				
54	2	198071-58810	GROMMET, 8	1	1	1	1				
55	2	1A7470-82810	COVER, LATCH	1	1	1	1				
56	1	1A7470-82900	COVER, LATCH R	1	1	1	1				
57	2	198071-58810	GROMMET, 8	1	1	1	1				
58	2	1A7470-82820	COVER, LATCH	1	1	1	1				
59	1	1A7470-82950	PLATE, SUPPORT	2	2	2	2				
60	1	198460-83350	BOLT, M8X16	4	4	4	4				
61	1	198093-84810	SEAL, FENDER	4	4	4	4			Z	
	(A=F090108)	(B=F080596)	(C=F070860) (D=F061533)								
62	1	22372-080000	PIN, SNAP 8	2	2	2	2				
63	1	22487-080450	PIN 8X 45	2	2	2	2				
64	1	26106-060122	BOLT, M6X 12 PLATED	4	4	4	4				
65	1	26106-060122	BOLT, M6X 12 PLATED	4	4	4	4				
66	1	26106-060122	BOLT, M6X 12 PLATED	2	2	2	2				
67	1	26106-080252	BOLT, M8X 25 PLATED	8	8	8	8				
68	1	26577-060202	SCREW, M6X20	6	6	6	6				
69	1	26577-080252	SCREW, M8X25	4	4	4	4				
70	1	26589-080122	SCREW, M8	2	2	2	2				
70-1	1	1C6053-26020	CAP, RUBBER 8X3	2	2	2	2			S	
	(A=F090108)	(B=F080596)	(C=F070860) (D=F061533)								

N:Old $\overset{\text{Yes}}{\underset{\text{No}}{\leftrightarrow}}$ New, Q:Old $\overset{\text{No}}{\underset{\text{Yes}}{\leftrightarrow}}$ New, R:Old $\overset{\text{Yes}}{\underset{\text{Yes}}{\leftrightarrow}}$ New, S:Old $\overset{\text{No}}{\underset{\text{No}}{\leftrightarrow}}$ New, W:Add, Z:Discontinued, F:Interchangeable by set, K:Q'ty Change

Copyright (C) 2014 YANMAR CO., LTD. All RightsReserved.

Fig.192. FRONT WINDOW

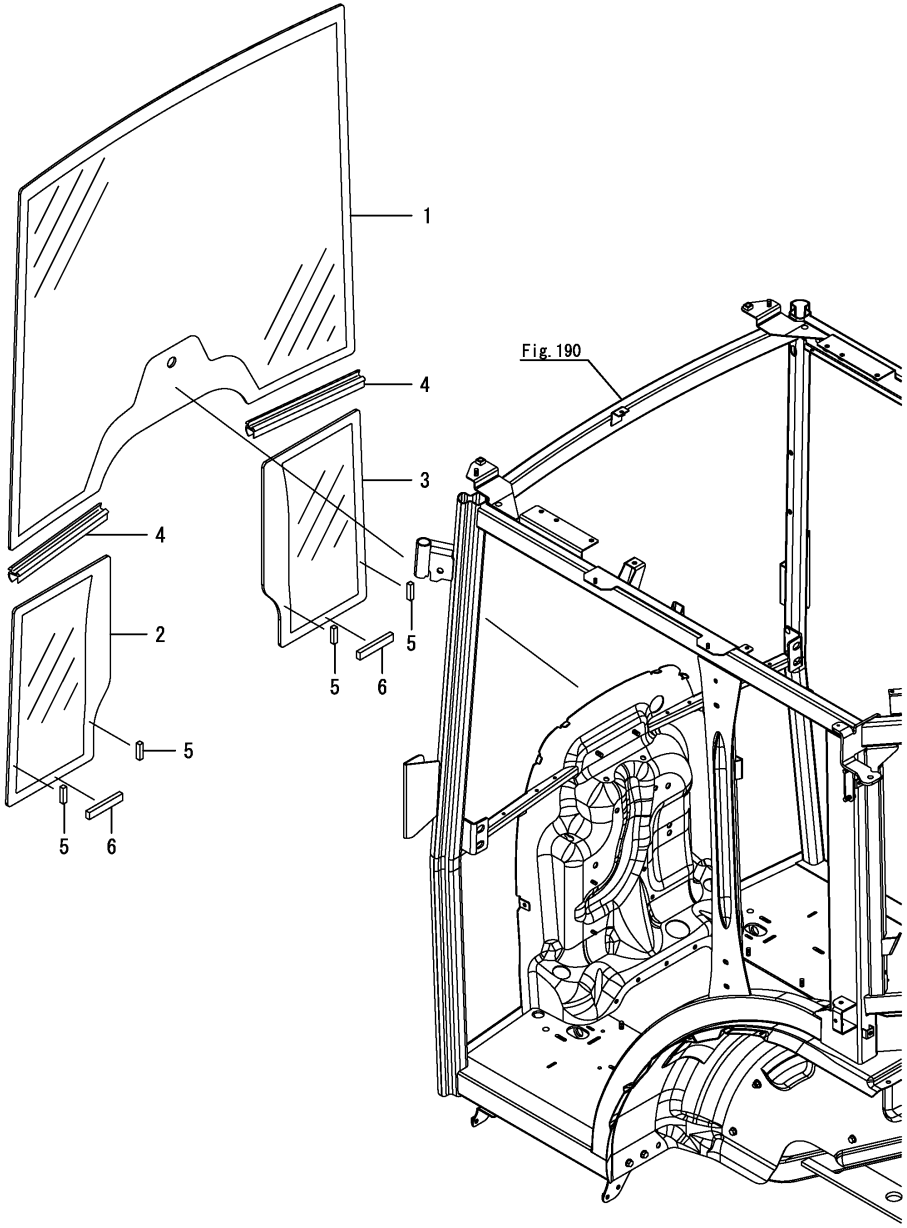

(A)=EG326Y (D)=EG334Y
(B)=EG328Y (E)=
(C)=EG330Y (F)=

No.	Lev.	Parts No.	Description	Q'ty (A)	(B)	(C)	(D)	(E)	(F)	I	R
1	1	1A7210-83110	GLASS, FRONT	1	1	1	1				
2	1	1A7210-83150	GLASS, FRONT LOWER L	1	1	1	1				
3	1	1A7210-83160	GLASS, FRONT LOWER R	1	1	1	1				
4	1	1A7470-83250	MOLDINGS, GLASS 310	2	2	2	2				
5	1	1A7210-83200	SPACER, SIDE	4	4	4	4			W	
	(A=F090780)	(B=F080639)	(C=F071879) (D=F061704)								
6	1	1A7210-83210	SPACER, LOWER	2	2	2	2			W	
	(A=F090780)	(B=F080639)	(C=F071879) (D=F061704)								

N:Old $\xleftarrow[\text{No}]{\text{Yes}}$ New, Q:Old $\xleftarrow[\text{Yes}]{\text{No}}$ New, R:Old $\xleftarrow[\text{Yes}]{\text{Yes}}$ New, S:Old $\xleftarrow[\text{No}]{\text{No}}$ New, W:Add, Z:Discontinued, F:Interchangeable by set, K:Q'ty Change

Copyright (C) 2014 YANMAR CO., LTD. All RightsReserved.

Fig.193. SIDE WINDOW

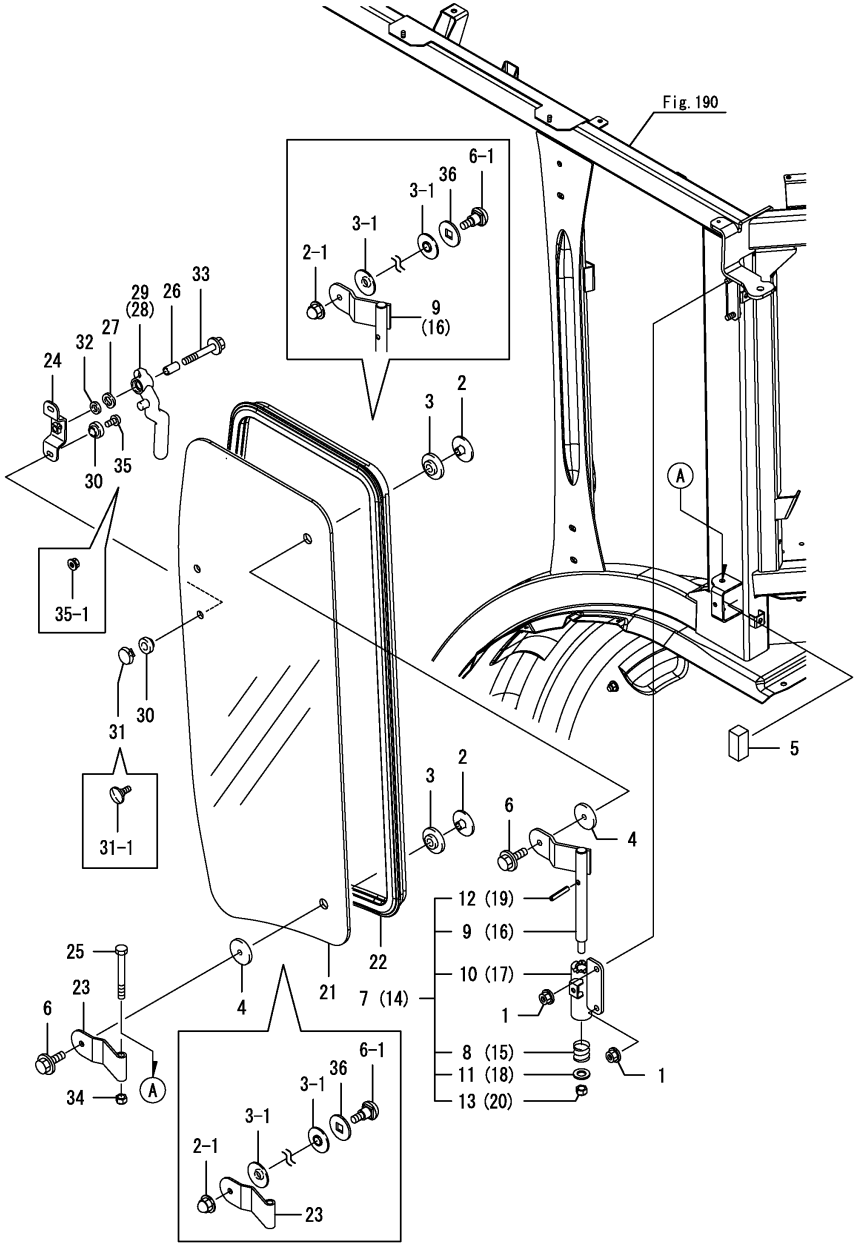

No.	Lev.	Parts No.	Description	Q'ty (A)	(B)	(C)	(D)	(E)	(F)	I	R
1	1	194990-22140	NUT, M8	4	4	4	4				
2	1	198094-82550	SCREW, M8	4	4	4	4				
2-1	1	1A8110-83730	NUT, CAP M8	4	4	4	4			S	
	(A=F090716)	(B=F080596)	(C=F071704) (D=F061533)								
3	1	198255-82650	RUBBER, CUSHION A	4	4	4	4				
3-1	1	1A8110-82670	RUBBER, CUSHION	8	8	8	8			S	
	(A=F090716)	(B=F080596)	(C=F071704) (D=F061533)								
4	1	198255-82660	RUBBER, CUSHION B	4	4	4	4			Z	
	(A=F090716)	(B=F080596)	(C=F071704) (D=F061533)								
5	1	1A8110-83280	RUBBER, 20X20X45	2	2	2	2				
6	1	198460-83350	BOLT, M8X16	4	4	4	4				
6-1	1	1A8110-82650	BOLT, CARRIAGE M8	4	4	4	4			S	
	(A=F090716)	(B=F080596)	(C=F071704) (D=F061533)								
7	1	1A8110-83350	HINGE ASSY, L	1	1	1	1				
8	2	198220-63340	SPRING, FRICTION	1	1	1	1				
9	2	1A8110-83460	HINGE, SIDE UPPER L	1	1	1	1				
10	2	1A8110-83510	HINGE ASSY, BL	1	1	1	1				
11	2	22137-120000	WASHER, 12	1	1	1	1				
12	2	22351-060036	PIN, SPRING 6.0X36	1	1	1	1				
13	2	26356-100002	NUT, M10	1	1	1	1				
14	1	1A8110-83360	HINGE ASSY, R	1	1	1	1				
15	2	198220-63340	SPRING, FRICTION	1	1	1	1				
16	2	1A8110-83470	HINGE ASSY, R	1	1	1	1				
17	2	1A8110-83520	HINGE ASSY, BR	1	1	1	1				
18	2	22137-120000	WASHER, 12	1	1	1	1				
19	2	22351-060036	PIN, SPRING 6.0X36	1	1	1	1				
20	2	26356-100002	NUT, M10	1	1	1	1				
21	1	1A7210-83410	GLASS, SIDE	2	2	2	2				
22	1	1A7210-83430	WEATHER-STRIP, SG	2	2	2	2				
23	1	1A8110-83450	HINGE, SIDE LOWER	2	2	2	2				
24	1	1A8110-83570	STAY, LOCK	2	2	2	2				
25	1	198208-83680	BOLT, REAR HINGE	2	2	2	2				
26	1	198153-83710	COLLAR, 8.4X12X22.5	2	2	2	2				
27	1	198153-83720	WASHER, 12	2	2	2	2				
28	1	198153-83730	HANDLE, REAR GLASS	1	1	1	1				
29	1	198463-83760	HANDLE, SIDE GLASS L	1	1	1	1				
30	1	197820-84740	LINER	8	8	8	8				
31	1	197820-84750	FITTING	4	4	4	4				
31-1	1	1A8110-62250	BOLT, M6	4	4	4	4			F	1
	(A=F090716)	(B=F080596)	(C=F071704) (D=F061533)								
32	1	22137-080000	WASHER, 8	2	2	2	2				
33	1	26106-080402	BOLT, M8X 40 PLATED	2	2	2	2				
34	1	26346-080002	NUT, M8	2	2	2	2				
35	1	26589-060102	SCREW, M6	4	4	4	4				
35-1	1	194990-22130	NUT, M6	4	4	4	4			F	1
	(A=F090716)	(B=F080596)	(C=F071704) (D=F061533)								
36	1	1A8110-82660	WASHER, CARRIAGE	4	4	4	4			W	
	(A=F090716)	(B=F080596)	(C=F071704) (D=F061533)								

(A)=EG326Y (D)=EG334Y
(B)=EG328Y (E)=
(C)=EG330Y (F)=

Remarks
(1)Interchangeable by simultaneous replacement with No.31-1, 35-1.

N:Old $\xleftarrow[\text{No}]{\text{Yes}}$ New, Q:Old $\xleftarrow[\text{Yes}]{\text{No}}$ New, R:Old $\xleftarrow[\text{Yes}]{\text{Yes}}$ New, S:Old $\xleftarrow[\text{No}]{\text{No}}$ New, W:Add, Z:Discontinued, F:Interchangeable by set, K:Q'ty Change

Copyright (C) 2014 YANMAR CO., LTD. All RightsReserved.

Fig.194. REAR WINDOW

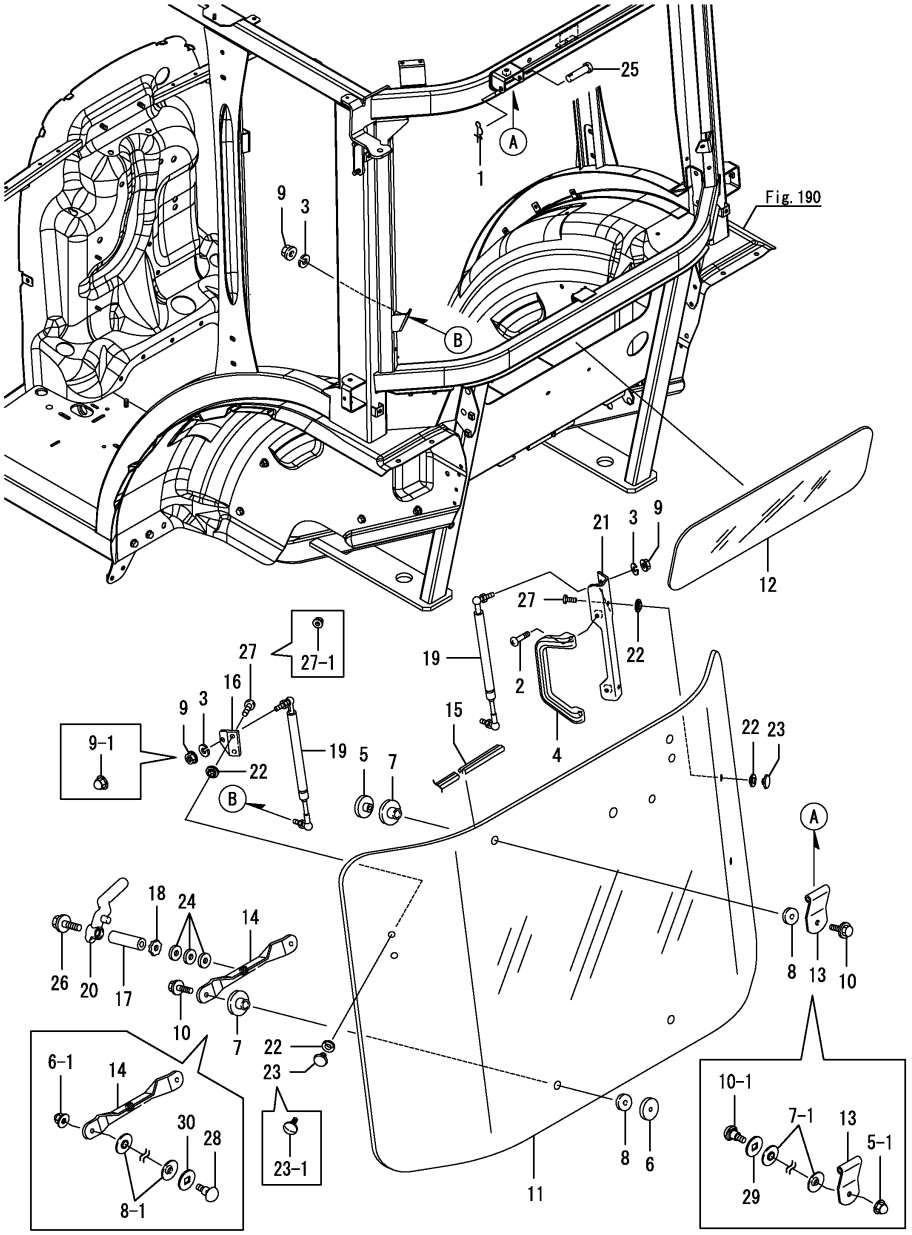

Remarks
(1)Interchangeable by simultaneous replacement with No.23-1, 27-1.

(A)=EG326Y (D)=EG334Y
(B)=EG328Y (E)=
(C)=EG330Y (F)=

No.	Lev.	Parts No.	Description	Q'ty (A)	(B)	(C)	(D)	(E)	(F)	I	R
1	1	1C6281-52310	PIN, SNAP 6	2	2	2	2				
2	1	194065-60580	SCREW, M6X25	2	2	2	2				
3	1	198268-82270	WASHER, SPRING 8	4	4	4	4			Z	
	(A=F090716)	(B=F080596)	(C=F071704) (D=F061533)								
4	1	198094-82540	GRIP	1	1	1	1				
5	1	198094-82550	SCREW, M8	2	2	2	2				
5-1	1	1A8110-83730	NUT, CAP M8	2	2	2	2			S	
	(A=F090716)	(B=F080596)	(C=F071704) (D=F061533)								
6	1	198094-82550	SCREW, M8	2	2	2	2				
6-1	1	1A8110-83730	NUT, CAP M8	2	2	2	2			S	
	(A=F090716)	(B=F080596)	(C=F071704) (D=F061533)								
7	1	198255-82650	RUBBER, CUSHION A	4	4	4	4				
7-1	1	1A8110-82670	RUBBER, CUSHION	4	4	4	4			S	
	(A=F090716)	(B=F080596)	(C=F071704) (D=F061533)								
8	1	198255-82660	RUBBER, CUSHION B	4	4	4	4				
8-1	1	1A8110-82670	RUBBER, CUSHION	4	4	4	4			S	
	(A=F090716)	(B=F080596)	(C=F071704) (D=F061533)								
9	1	198255-82840	NUT, M8	4	4	4	4				
9-1	1	1A8110-83730	NUT, CAP M8	4	4	4	4			S	
	(A=F090716)	(B=F080596)	(C=F071704) (D=F061533)								
10	1	198460-83350	BOLT, M8X16	4	4	4	4				
10-1	1	1A8110-82650	BOLT, CARRIAGE M8	2	2	2	2			S	
	(A=F090716)	(B=F080596)	(C=F071704) (D=F061533)								
11	1	1A7210-83610	GLASS, REAR	1	1	1	1				
12	1	198094-83620	GLASS, REAR LOWER	1	1	1	1				
13	1	1A7030-83630	HINGE, REAR	2	2	2	2				
14	1	198094-83640	BRACKET, LOCK REAR	1	1	1	1				
15	1	1A7320-83640	WEATHER-STRIP, 3260	1	1	1	1				
16	1	198094-83650	STAY, GUS SPRING	1	1	1	1				
17	1	198153-83710	COLLAR, 8.4X12X22.5	1	1	1	1				
18	1	198153-83720	WASHER, 12	1	1	1	1				
19	1	198093-83751	SPRING, GAS	2	2	2	2				
19-1	1	198093-83752	DAMPER, GAS 100	2	2	2	2			R	
	(A=F090716)	(B=F080596)	(C=F071704) (D=F061533)								
20	1	198463-83760	HANDLE, SIDE GLASS L	1	1	1	1				
21	1	1A7320-83790	STAY, REAR GLASS	1	1	1	1				
21-1	1	1A7320-83791	STAY, REAR GLASS	1	1	1	1			R	
	(A=F090716)	(B=F080596)	(C=F071704) (D=F061533)								
22	1	197820-84740	LINER	8	8	8	8				
23	1	197820-84750	FITTING	4	4	4	4				
23-1	1	1A8110-62250	BOLT, M6	4	4	4	4			F	1
	(A=F090716)	(B=F080596)	(C=F071704) (D=F061533)								
24	1	22137-080000	WASHER, 8	3	3	3	3				
25	1	22487-080600	PIN 8X 60	2	2	2	2				
26	1	26106-080402	BOLT, M8X 40 PLATED	1	1	1	1				
27	1	26589-060102	SCREW, M6	4	4	4	4				
27-1	1	194990-22130	NUT, M6	4	4	4	4			F	1
	(A=F090716)	(B=F080596)	(C=F071704) (D=F061533)								
28	1	1A8110-82650	BOLT, CARRIAGE M8	2	2	2	2			W	
	(A=F090716)	(B=F080596)	(C=F071704) (D=F061533)								
28-1	1	1A8110-82650	BOLT, CARRIAGE M8	2	2	2	2			Z	

N:Old $\overset{\text{Yes}}{\underset{\text{No}}{\leftrightarrow}}$ New, Q:Old $\overset{\text{No}}{\underset{\text{Yes}}{\leftrightarrow}}$ New, R:Old $\overset{\text{Yes}}{\underset{\text{Yes}}{\leftrightarrow}}$ New, S:Old $\overset{\text{No}}{\underset{\text{No}}{\leftrightarrow}}$ New, W:Add, Z:Discontinued, F:Interchangeable by set, K:Q'ty Change

++ CONTINUE ++

Copyright (C) 2014 YANMAR CO., LTD. All RightsReserved.

Fig.194. REAR WINDOW

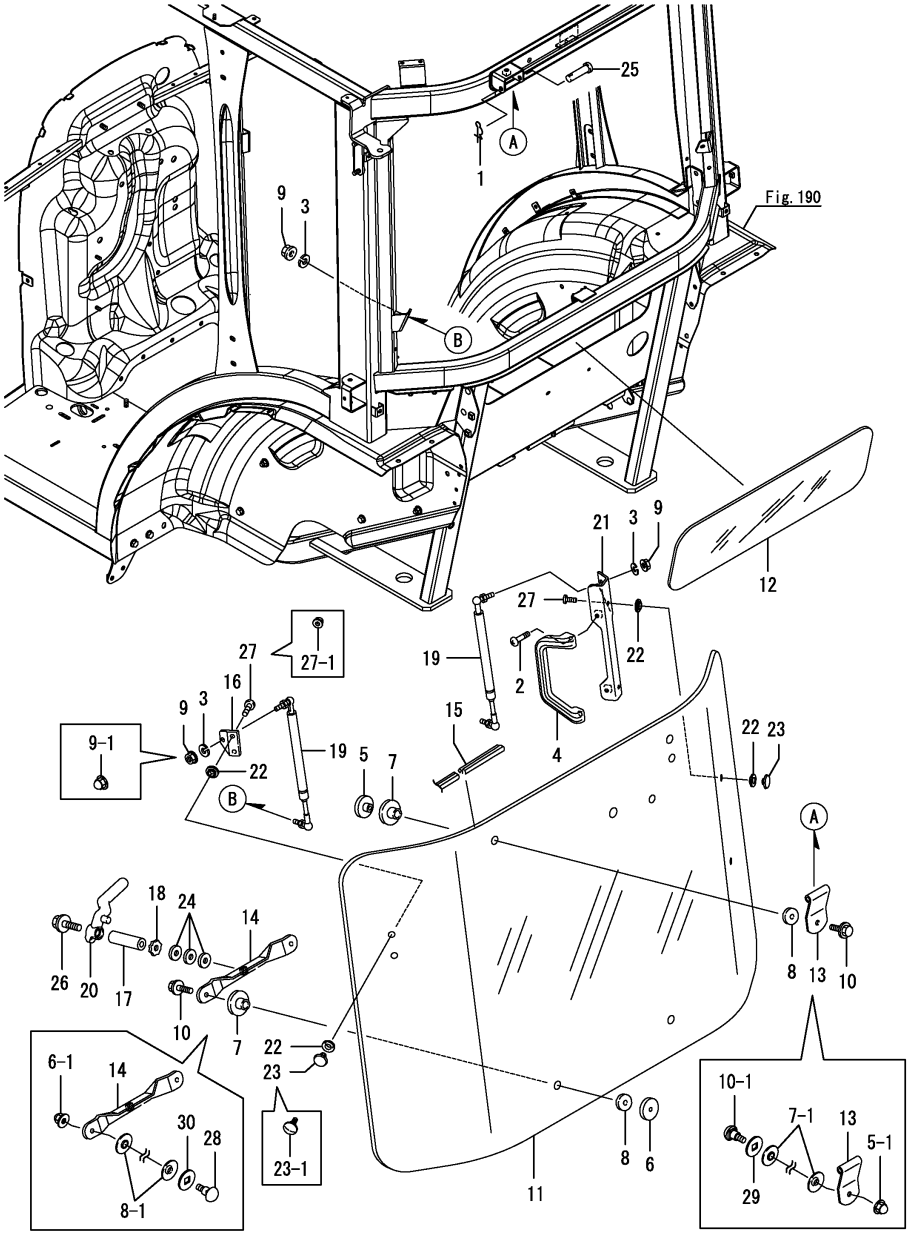

Remarks
(1)Interchangeable by simultaneous replacement with No.23-1, 27-1.

(A)=EG326Y (D)=EG334Y
(B)=EG328Y (E)=
(C)=EG330Y (F)=

No.	Lev.	Parts No.	Description	Q'ty (A)	(B)	(C)	(D)	(E)	(F)	I	R
	(A=F100119)	(B=F200101)	(C=F300396) (D=F400417)								
29	1	1A8110-82660	WASHER, CARRIAGE	2	2	2	2			W	
	(A=F090716)	(B=F080596)	(C=F071704) (D=F061533)								
30	1	1A8110-82660	WASHER, CARRIAGE	2	2	2	2			W	
	(A=F090716)	(B=F080596)	(C=F071704) (D=F061533)								
30-1	1	1A8110-82660	WASHER, CARRIAGE	2	2	2	2			Z	
	(A=F100119)	(B=F200101)	(C=F300396) (D=F400417)								

N:Old $\xleftarrow[\text{No}]{\text{Yes}}$ New, Q:Old $\xleftarrow[\text{Yes}]{\text{No}}$ New, R:Old $\xleftarrow[\text{Yes}]{\text{Yes}}$ New, S:Old $\xleftarrow[\text{No}]{\text{No}}$ New, W:Add, Z:Discontinued, F:Interchangeable by set, K:Q'ty Change

Copyright (C) 2014 YANMAR CO., LTD. All RightsReserved.

Fig.301. REAR WINDOW(SIMPLE)

(A)=EG326Y (D)=EG334Y
(B)=EG328Y (E)=
(C)=EG330Y (F)=

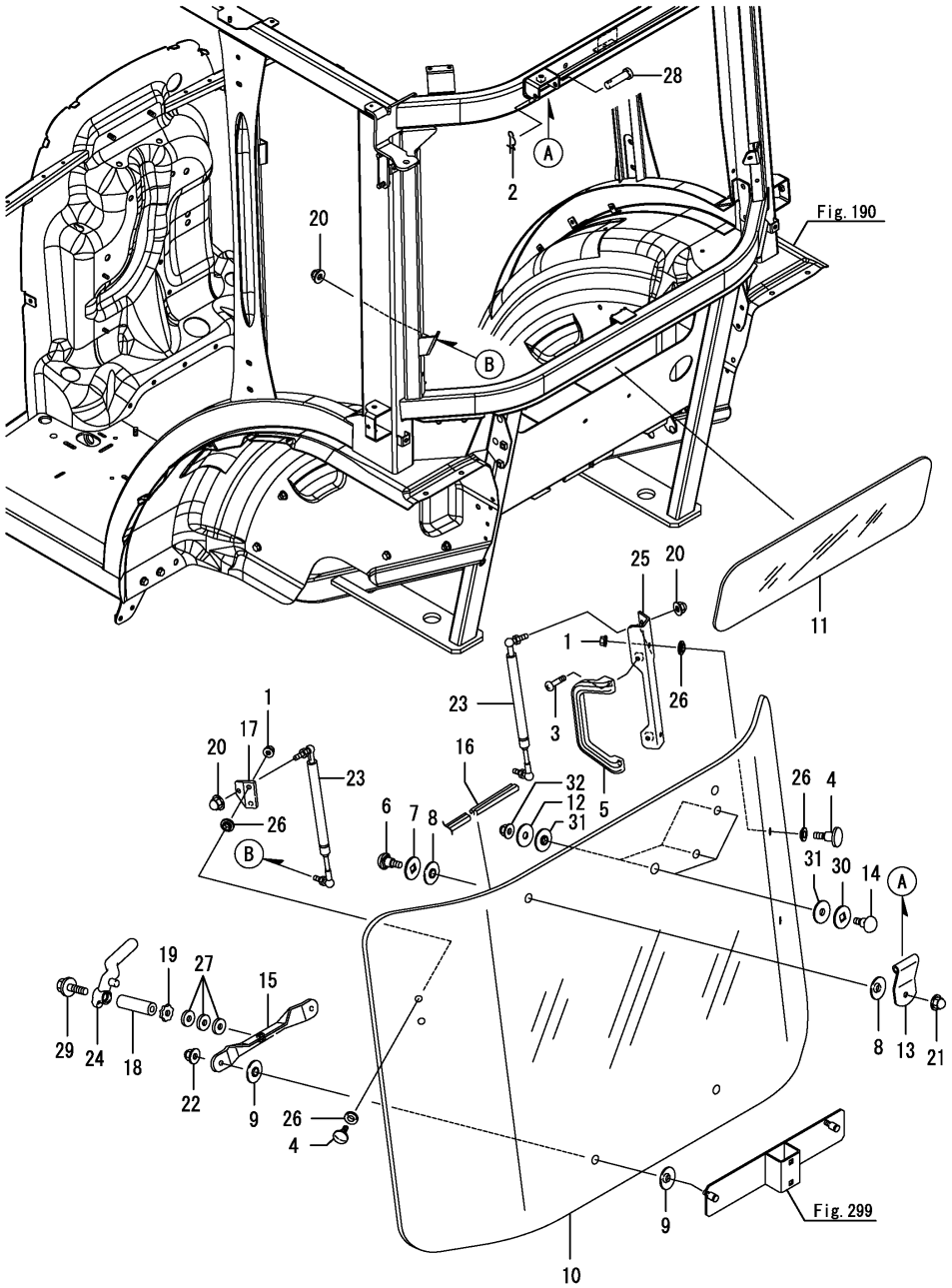

No.	Lev.	Parts No.	Description	Q'ty (A)	(B)	(C)	(D)	(E)	(F)	I	R
1	1	194990-22130	NUT, M6				4				
2	1	1C6281-52310	PIN, SNAP 6				2				
3	1	194065-60580	SCREW, M6X25				2				
4	1	1A8110-62250	BOLT, M6				4				
5	1	198094-82540	GRIP				1				
6	1	1A8110-82650	BOLT, CARRIAGE M8				2				
7	1	1A8110-82660	WASHER, CARRIAGE				2				
8	1	1A8110-82670	RUBBER, CUSHION				4				
9	1	1A8110-82670	RUBBER, CUSHION				4				
10	1	1A7210-83610	GLASS, REAR				1				
11	1	198094-83620	GLASS, REAR LOWER				1				
12	1	198255-82640	STAY, PLATE				3				
13	1	1A7030-83630	HINGE, REAR				2				
14	1	1A8110-82650	BOLT, CARRIAGE M8				3				
15	1	198094-83640	BRACKET, LOCK REAR				1				
16	1	1A7320-83640	WEATHER-STRIP, 3260				1				
17	1	198094-83650	STAY, GUS SPRING				1				
18	1	198153-83710	COLLAR, 8.4X12X22.5				1				
19	1	198153-83720	WASHER, 12				1				
20	1	1A8110-83730	NUT, CAP M8				4				
21	1	1A8110-83730	NUT, CAP M8				2				
22	1	1A8110-83730	NUT, CAP M8				2				
23	1	198093-83752	DAMPER, GAS 100				2				
24	1	198463-83760	HANDLE, SIDE GLASS L				1				
25	1	1A7320-83791	STAY, REAR GLASS				1				
26	1	197820-84740	LINER				8				
27	1	22137-080000	WASHER, 8				3				
28	1	22487-080600	PIN 8X 60				2				
29	1	26106-080402	BOLT, M8X 40 PLATED				1				
30	1	1A8110-82660	WASHER, CARRIAGE				3				
31	1	1A8110-82670	RUBBER, CUSHION				6				
32	1	1A8110-83730	NUT, CAP M8				3				

N:Old $\xleftarrow[\text{No}]{\text{Yes}}$ New, Q:Old $\xleftarrow[\text{Yes}]{\text{No}}$ New, R:Old $\xleftarrow[\text{Yes}]{\text{Yes}}$ New, S:Old $\xleftarrow[\text{No}]{\text{No}}$ New, W:Add, Z:Discontinued, F:Interchangeable by set, K:Q'ty Change

Copyright (C) 2014 YANMAR CO., LTD. All RightsReserved.

Fig.195. INTERIORS

(A)=EG326Y (D)=EG334Y
(B)=EG328Y (E)=
(C)=EG330Y (F)=

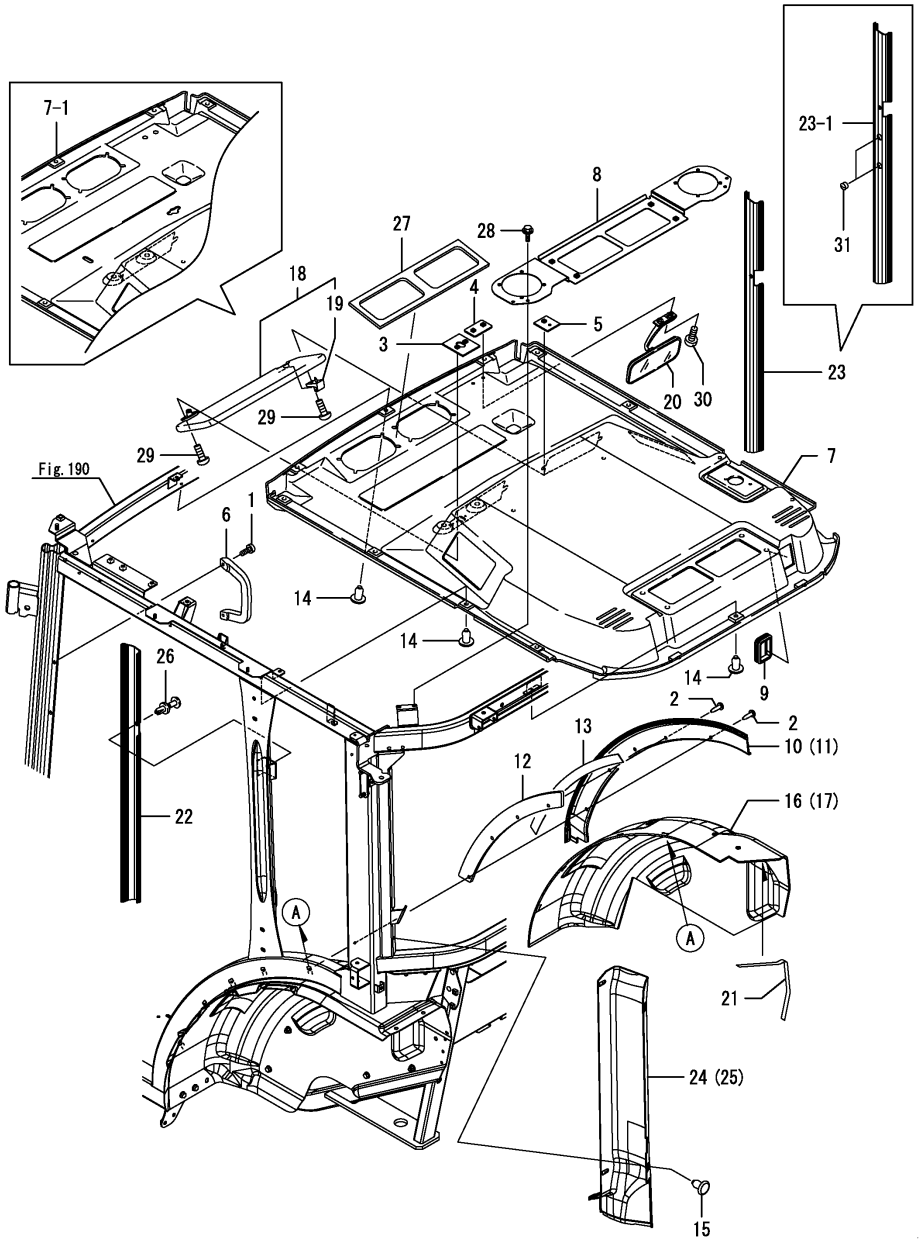

No.	Lev.	Parts No.	Description	Q'ty (A)	(B)	(C)	(D)	(E)	(F)	I	R
1	1	194065-60580	SCREW, M6X25	4	4	4	4				
2	1	194697-62560	CAP, HOLE	9	9	9	9				
2-1	1	1A7210-84220	CAP, HOLE	9	9	9	9			N	
	(A=F090216)	(B=F080594)	(C=F070860) (D=F060746)								
3	1	1A7210-81240	PLATE, VISOR L	1	1	1	1			Z	
	(A=F090108)	(B=F080596)	(C=F070860) (D=F061533)								
4	1	1A7210-81260	PLATE, VISOR R	1	1	1	1			Z	
	(A=F090108)	(B=F080596)	(C=F070860) (D=F061533)								
5	1	1A7210-81300	PLATE, MIRROR	1	1	1	1			Z	
	(A=F090108)	(B=F080596)	(C=F070860) (D=F061533)								
6	1	198094-82540	GRIP	2	2	2	2				
7	1	1A7210-84100	ROOF, INNER	1	1	1	1				
7-1	1	1A7210-84101	ROOF, INNER	1	1	1	1			F	1
	(A=F090108)	(B=F080596)	(C=F070860) (D=F061533)								
8	1	1A7210-84120	PLATE, INNER ROOF	1	1	1	1				
9	1	1A7030-84141	GROMMET, SWITCHING	1	1	1	1				
10	1	1A7210-84150	COVER, SEAL PLATE L	1	1	1	1				
11	1	1A7210-84160	COVER, SEAL PLATE R	1	1	1	1				
12	1	1A7210-84180	PLATE	2	2	2	2				
13	1	1A7210-84190	TAPE, DOUBLE STICK	2	2	2	2				
14	1	1A8110-84210	RIVET, PUSH	16	16	16	16				
15	1	1A8110-84210	RIVET, PUSH	8	8	8	8				
16	1	1A7210-84611	COVER, FENDER L	1	1	1	1				
17	1	1A7210-84621	COVER, FENDER R	1	1	1	1				
18	1	198463-84720	VISOR ASSY, SUN	1	1	1	1				
19	2	198463-84740	HOOK	1	1	1	1				
20	1	198463-84760	MIRROR, ROOM	1	1	1	1				
21	1	198093-84860	TAPE, DOUBLE STICK	2	2	2	2				
22	1	1A7210-85360	COVER, FRAME	1	1	1	1				
23	1	1A7210-85370	COVER, FRAME	1	1	1	1				
23-1	1	1A7210-85371	COVER, R SIDE FRAME	1	1	1	1			F	1
	(A=F090108)	(B=F080596)	(C=F070860) (D=F061533)								
24	1	1A7210-85470	COVER ASSY, FRAME ML	1	1	1	1				
25	1	1A7210-85490	COVER, FRAME INNER R	1	1	1	1				
26	1	198010-85810	RIVET, NYLON	2	2	2	2				
27	1	1A7030-87260	SEAL, FRONT GRILLE	1	1	1	1				
28	1	26106-060122	BOLT, M6X 12 PLATED	4	4	4	4				
29	1	26577-050202	SCREW, M5X20	3	3	3	3				
30	1	26589-060162	SCREW, M6	2	2	2	2				
31	1	1C6660-94100	PLUG, HOLE 16	2	2	2	2			W	
	(A=F090108)	(B=F080596)	(C=F070860) (D=F061533)								

Remarks
(1)Interchangeable by simultaneous replacement with No.7-1,23-1 Fig.190 No.4-1 & Fig.210 No.6-1.

N:Old ←Yes/No→ New, Q:Old ←No/Yes→ New, R:Old ←Yes/Yes→ New, S:Old ←No/No→ New, W:Add, Z:Discontinued, F:Interchangeable by set, K:Q'ty Change

Copyright (C) 2014 YANMAR CO., LTD. All RightsReserved.

Fig.302. INTERIORS(SIMPLE)

(A)=EG326Y (D)=EG334Y
(B)=EG328Y (E)=
(C)=EG330Y (F)=

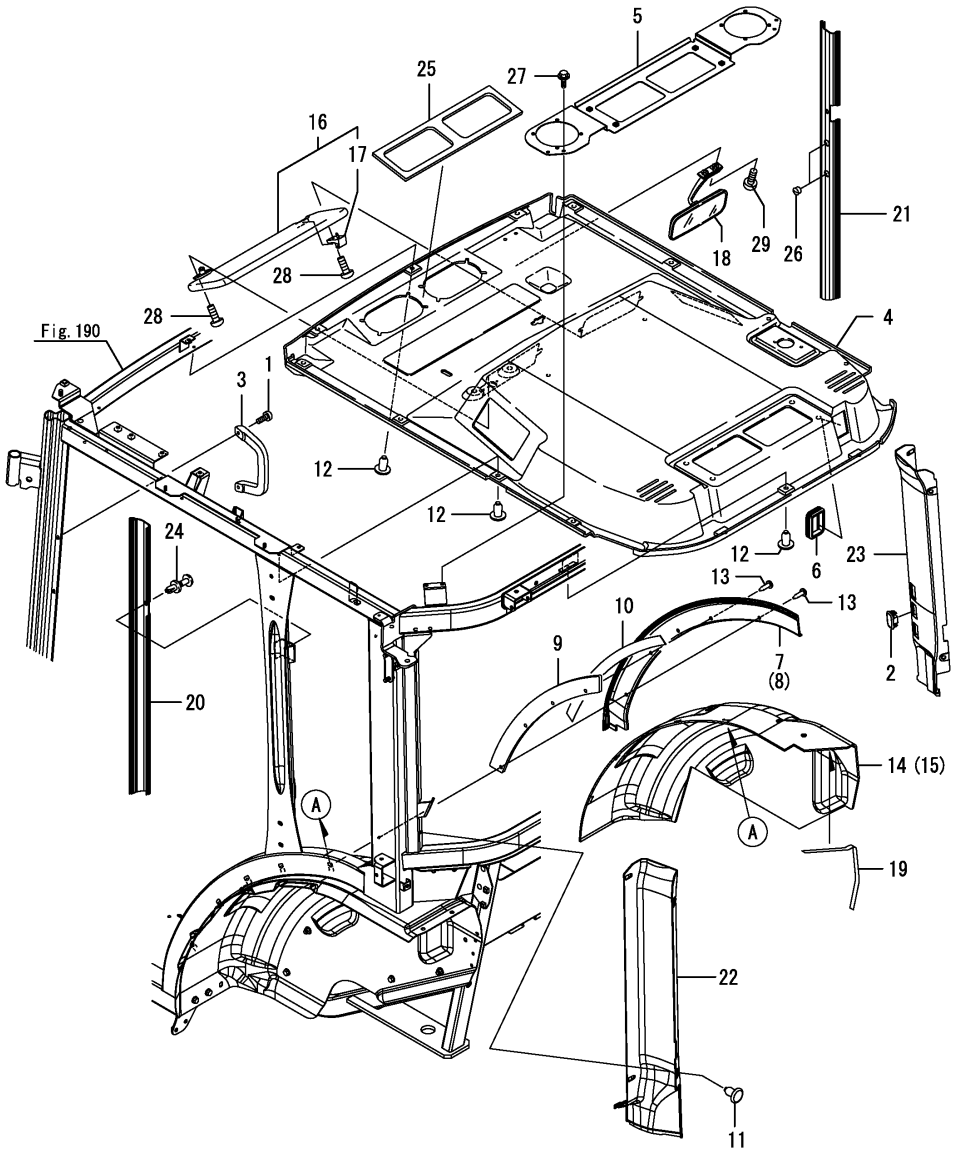

No.	Lev.	Parts No.	Description	Q'ty (A)	(B)	(C)	(D)	(E)	(F)	I	R
1	1	194065-60580	SCREW, M6X25				4				
2	1	1A7805-52420	COVER, SWITCH				1				
3	1	198094-82540	GRIP				2				
4	1	1A7210-84101	ROOF, INNER				1				
5	1	1A7210-84120	PLATE, INNER ROOF				1				
6	1	1A7030-84141	GROMMET, SWITCHING				1				
7	1	1A7210-84150	COVER, SEAL PLATE L				1				
8	1	1A7210-84160	COVER, SEAL PLATE R				1				
9	1	1A7210-84180	PLATE				2				
10	1	1A7210-84190	TAPE, DOUBLE STICK				2				
11	1	1A8110-84210	RIVET, PUSH				8				
12	1	1A8110-84210	RIVET, PUSH				16				
13	1	1A7210-84220	CAP, HOLE				9				
14	1	1A7210-84611	COVER, FENDER L				1				
15	1	1A7210-84621	COVER, FENDER R				1				
16	1	198463-84720	VISOR ASSY, SUN				1				
17	2	198463-84740	HOOK				1				
18	1	198463-84760	MIRROR, ROOM				1				
19	1	198093-84860	TAPE, DOUBLE STICK				2				
20	1	1A7210-85360	COVER, FRAME				1				
21	1	1A7210-85371	COVER, R SIDE FRAME				1				
22	1	1A7210-85470	COVER ASSY, FRAME ML				1				
23	1	1A7210-85490	COVER, FRAME INNER R				1				
24	1	198010-85810	RIVET, NYLON				2				
25	1	1A7030-87260	SEAL, FRONT GRILLE				1				
26	1	1C6660-94100	PLUG, HOLE 16				2				
27	1	26106-060122	BOLT, M6X 12 PLATED				4				
28	1	26577-050202	SCREW, M5X20				3				
29	1	26589-060162	SCREW, M6				2				

N:Old $\frac{\text{Yes}}{\text{No}}$ New, Q:Old $\frac{\text{No}}{\text{Yes}}$ New, R:Old $\frac{\text{Yes}}{\text{Yes}}$ New, S:Old $\frac{\text{No}}{\text{No}}$ New, W:Add, Z:Discontinued, F:Interchangeable by set, K:Q'ty Change

Copyright (C) 2014 YANMAR CO., LTD. All RightsReserved.

Fig.196. CABIN SEAL(1)

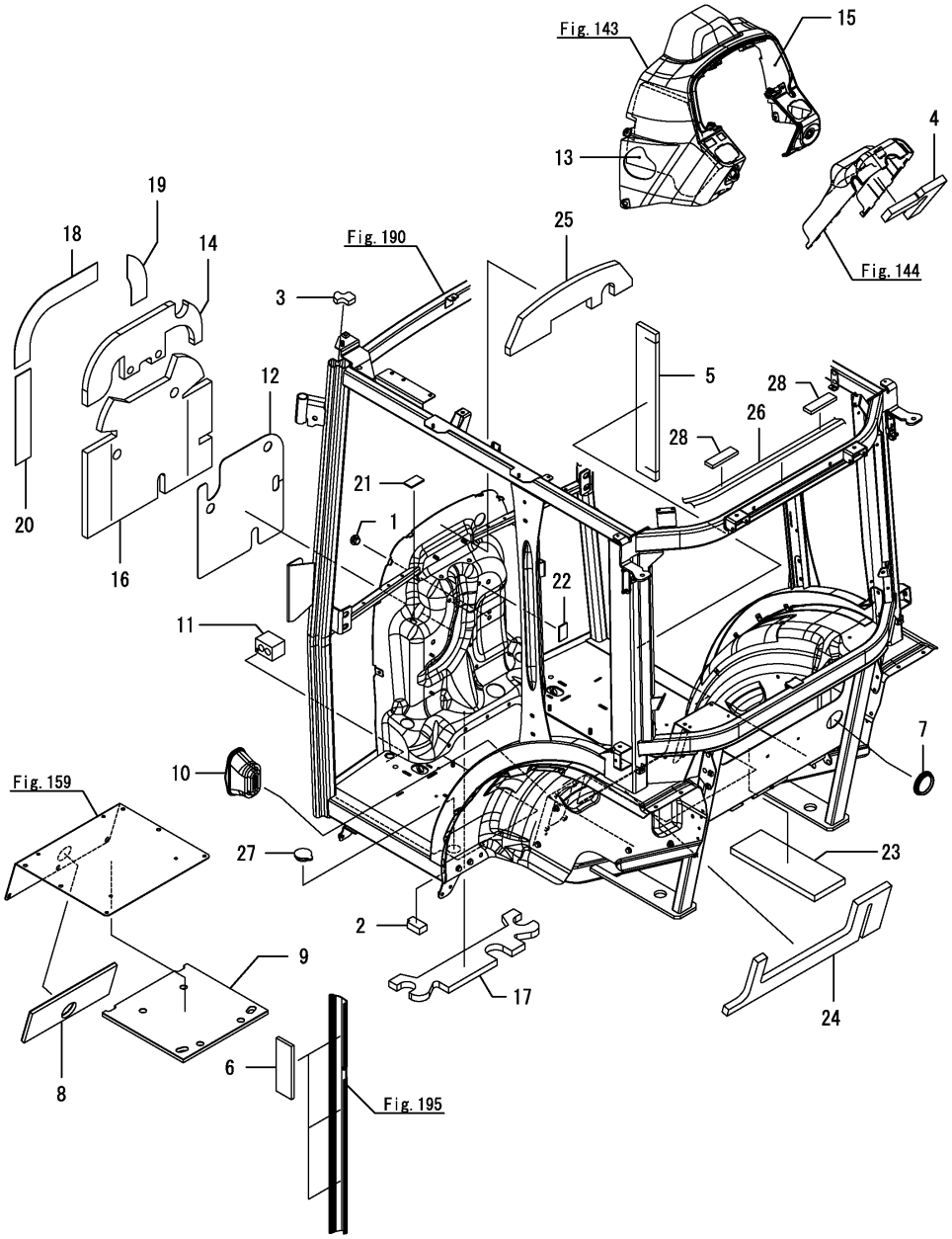

(A)=EG326Y (D)=EG334Y
(B)=EG328Y (E)=
(C)=EG330Y (F)=

No.	Lev.	Parts No.	Description	Q'ty (A)	(B)	(C)	(D)	(E)	(F)	I	R
1	1	194275-62320	CAP, RUBBER	1	1	1	1				
2	1	1A7210-84170	SEAL, HOSE R	2	2	2	2				
3	1	198208-84190	SEAL, FRONT PIPE	2	2	2	2				
4	1	1A7210-84260	SEAT, COLUMN COVER	1	1	1	1				
5	1	1A8110-84280	ACOUSTIC ABSORBENT	2	2	2	2			Z	
	(A=F090108)	(B=F080596)	(C=F070860) (D=F061533)								
6	1	1A8110-84300	ACOUSTIC ABSORBENT	6	6	6	6			Z	
	(A=F090108)	(B=F080596)	(C=F070860) (D=F061533)								
7	1	1A7210-84410	CAP, 60	1	1	1	1				
8	1	1A7210-84510	SOUNDPROOF, AB	1	1	1	1			Z	
	(A=F090108)	(B=F080596)	(C=F070860) (D=F061533)								
9	1	1A7210-84521	SOUNDPROOF, BB	1	1	1	1			Z	
	(A=F090108)	(B=F080596)	(C=F070860) (D=F061533)								
10	1	1A7180-84600	BOOT, PTO	1	1	1	1				
11	1	1A7210-84680	SEAL, HOSE F	2	2	2	2				
12	1	1A7210-84730	MATERIAL, DAMPING	1	1	1	1				
13	1	1A7320-84730	SEAT, DASHBOARD L	1	1	1	1				
14	1	1A7210-84740	PAD, PLATE AIR-CUT	1	1	1	1				
15	1	1A7320-84740	SEAT, DASHBOARD R	1	1	1	1				
16	1	1A7210-84750	PAD, PLATE AIR-CUT	1	1	1	1				
17	1	1A7210-84760	PAD, PLATE AIR-CUT	1	1	1	1				
18	1	1A7210-84770	MATERIAL, DAMPING UR	1	1	1	1				
19	1	1A7210-84780	MATERIAL, DAMPING UL	1	1	1	1				
20	1	1A7210-84790	MATERIAL, DAMPING	2	2	2	2				
21	1	198093-84810	SEAL, FENDER	2	2	2	2				
22	1	198093-84810	SEAL, FENDER	2	2	2	2				
23	1	1A7210-84830	ACOUSTIC ABSORBENT	1	1	1	1			Z	
	(A=F090108)	(B=F080596)	(C=F070860) (D=F061533)								
24	1	1A7210-84840	ACOUSTIC ABSORBENT	1	1	1	1			Z	
	(A=F090108)	(B=F080596)	(C=F070860) (D=F061533)								
25	1	1A7210-84910	ACOUSTIC ABSORBENT	1	1	1	1			Z	
	(A=F090108)	(B=F080596)	(C=F070860) (D=F061533)								
26	1	1A7030-85590	SEAL, ROOF	1	1	1	1				
27	1	198094-85710	GROMMET, 38	2	2	2	2				
28	1	198094-85570	SEAL, ROOF UPPER	2	2	2	2			W	
	(A=F090108)	(B=F080596)	(C=F070860) (D=F061533)								

N:Old $\frac{\text{Yes}}{\text{No}}$ New, Q:Old $\frac{\text{No}}{\text{Yes}}$ New, R:Old $\frac{\text{Yes}}{\text{Yes}}$ New, S:Old $\frac{\text{No}}{\text{No}}$ New, W:Add, Z:Discontinued, F:Interchangeable by set, K:Q'ty Change

Copyright (C) 2014 YANMAR CO., LTD. All RightsReserved.

Fig.197. CABIN SEAL(2)

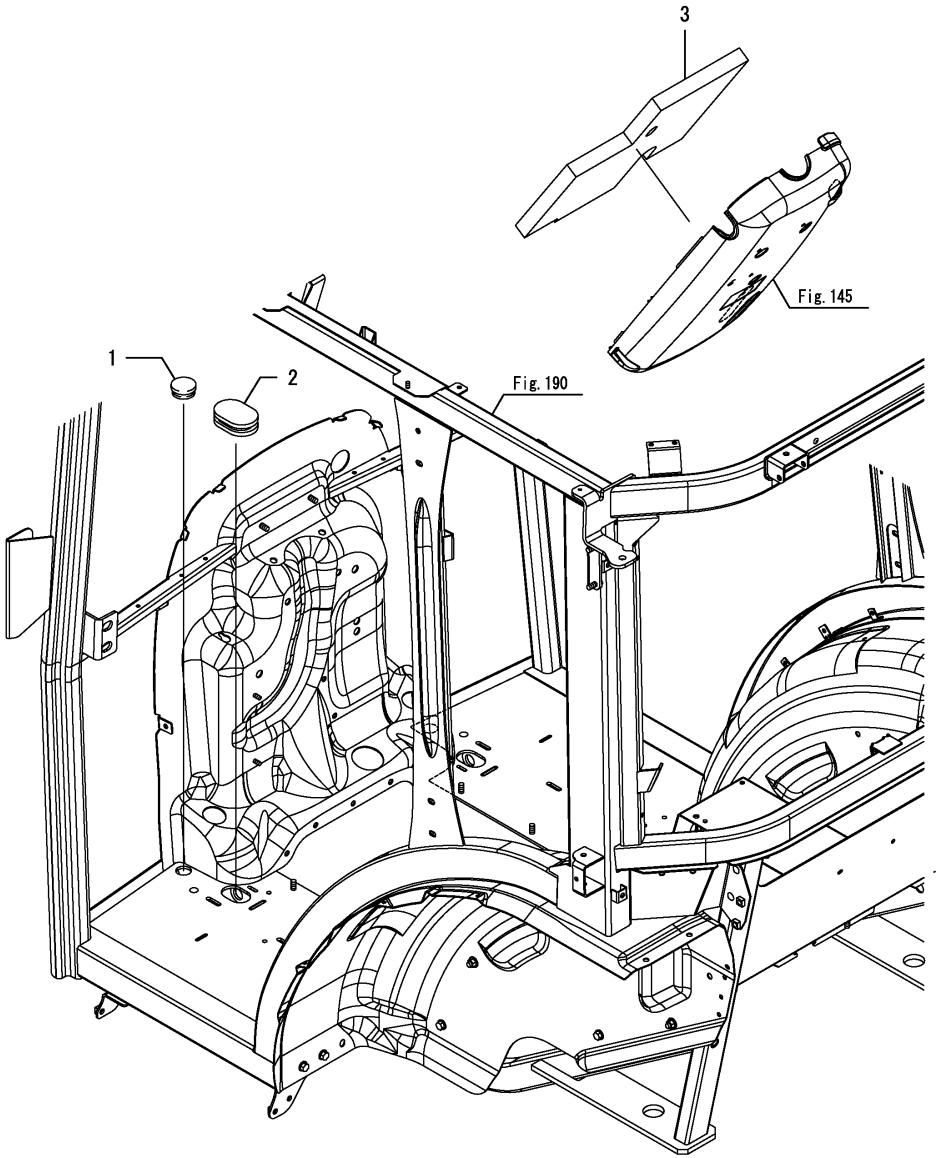

(A)=EG326Y (D)=EG334Y
(B)=EG328Y (E)=
(C)=EG330Y (F)=

No.	Lev.	Parts No.	Description	Q'ty (A)	(B)	(C)	(D)	(E)	(F)	I	R
1	1	194300-21460	CAP, RUBBER 25	2	2	2	2				
2	1	198129-63691	GROMMET	2	2	2	2				
3	1	1A7210-84270	SEAT, COLUMN COVER	1	1	1	1				

N:Old $\xleftrightarrow[\text{No}]{\text{Yes}}$ New, Q:Old $\xleftrightarrow[\text{Yes}]{\text{No}}$ New, R:Old $\xleftrightarrow[\text{Yes}]{\text{Yes}}$ New, S:Old $\xleftrightarrow[\text{No}]{\text{No}}$ New, W:Add, Z:Discontinued, F:Interchangeable by set, K:Q'ty Change

Copyright (C) 2014 YANMAR CO., LTD. All RightsReserved.

Fig.198. ROOF

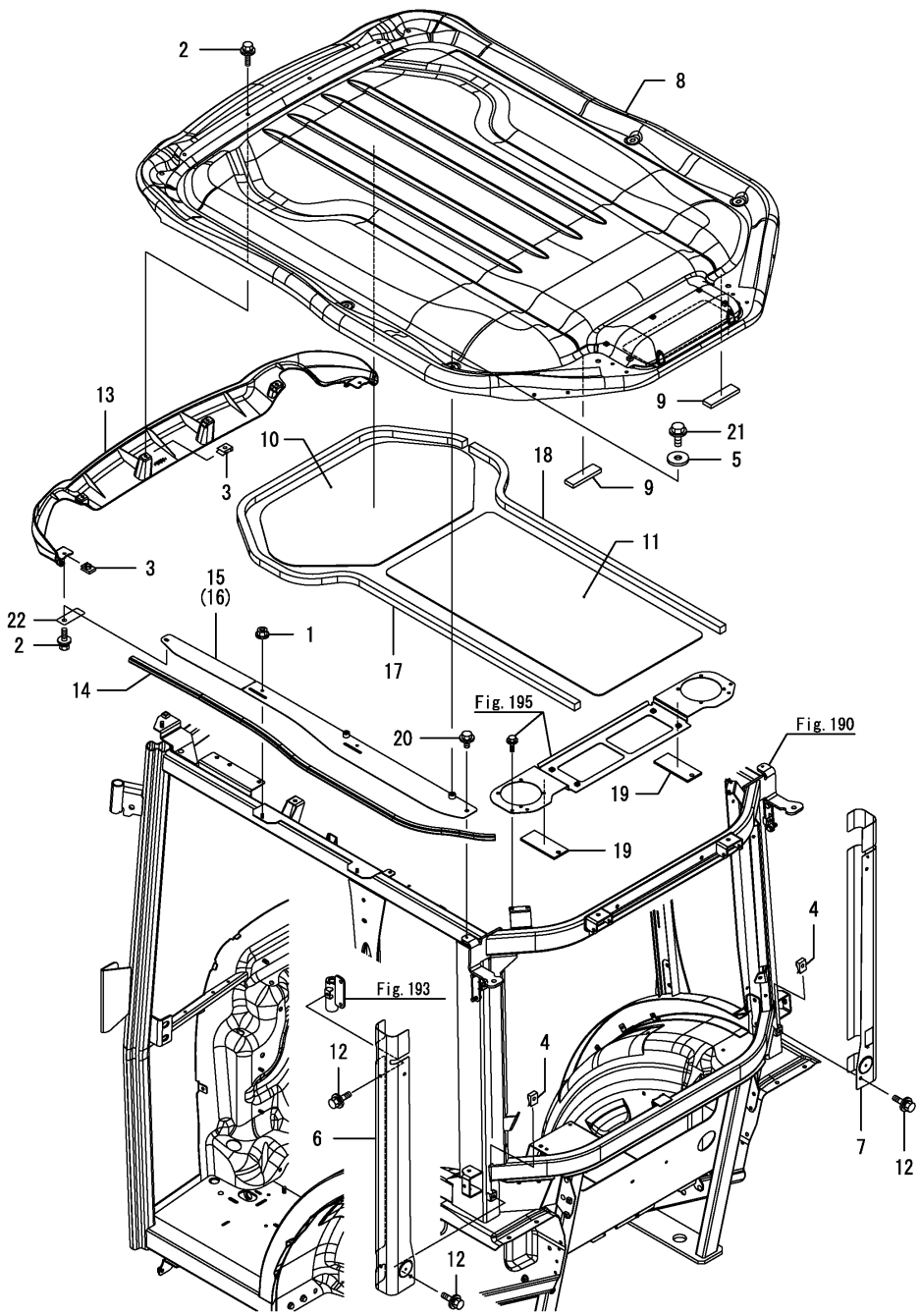

(A)=EG326Y (D)=EG334Y
(B)=EG328Y (E)=
(C)=EG330Y (F)=

No.	Lev.	Parts No.	Description	Q'ty (A)	(B)	(C)	(D)	(E)	(F)	I	R
1	1	194990-22130	NUT, M6	4	4	4	4				
2	1	198072-60590	BOLT, M6X20	6	6	6	6				
3	1	198071-61890	NUT, SPEED M6	6	6	6	6				
4	1	198071-61890	NUT, SPEED M6	4	4	4	4				
5	1	198255-83550	WASHER, 8	6	6	6	6				
6	1	1A7210-85450	COVER, REAR PILLAR L	1	1	1	1				
7	1	1A7210-85460	COVER, REAR PILLAR R	1	1	1	1				
8	1	1A7210-85500	ROOF ASSY, OUTER	1	1	1	1				
9	1	198094-85570	SEAL, ROOF UPPER	2	2	2	2				
10	1	198208-85610	INSULATOR, A	1	1	1	1				
11	1	198208-85620	INSULATOR, B	1	1	1	1				
12	1	198093-85650	BOLT, M6X16	8	8	8	8				
13	1	1A7210-85700	COVER, LAMP FRONT	1	1	1	1				
14	1	1A7210-85720	SEAL, ROOF	2	2	2	2				
15	1	1A7210-85750	PLATE, ROOF SEAL L	1	1	1	1				
15-1	1	1A7210-85751	PLATE ASSY, L ROOF	1	1	1	1			N	
	(A=F090851)	(B=F080705)	(C=F072080)	(D=F061929)							
16	1	1A7210-85760	PLATE, ROOF SEAL R	1	1	1	1				
16-1	1	1A7210-85761	PLATE ASSY, R ROOF	1	1	1	1			N	
	(A=F090851)	(B=F080705)	(C=F072080)	(D=F061929)							
17	1	1A7210-87460	SEAL, A	1	1	1	1				
18	1	1A7210-87470	SEAL, B	1	1	1	1				
19	1	1A7210-87480	SEAL, C	2	2	2	2				
20	1	26106-060122	BOLT, M6X 12 PLATED	2	2	2	2				
21	1	198460-83350	BOLT, M8X16	6	6	6	6				
22	1	1A7210-85780	PLATE, REINFORCEMENT	2	2	2	2			W	
	(A=F090829)	(B=F080684)	(C=F072030)	(D=F061853)							
22-1	1	1A7210-85780	PLATE, REINFORCEMENT	2	2	2	2			Z	
	(A=F090851)	(B=F080705)	(C=F072080)	(D=F061929)							

N:Old $\frac{\text{Yes}}{\text{No}}$ New, Q:Old $\frac{\text{No}}{\text{Yes}}$ New, R:Old $\frac{\text{Yes}}{\text{Yes}}$ New, S:Old $\frac{\text{No}}{\text{No}}$ New, W:Add, Z:Discontinued, F:Interchangeable by set, K:Q'ty Change

Copyright (C) 2014 YANMAR CO., LTD. All RightsReserved.

Fig.199. REARVIEW MIRROR

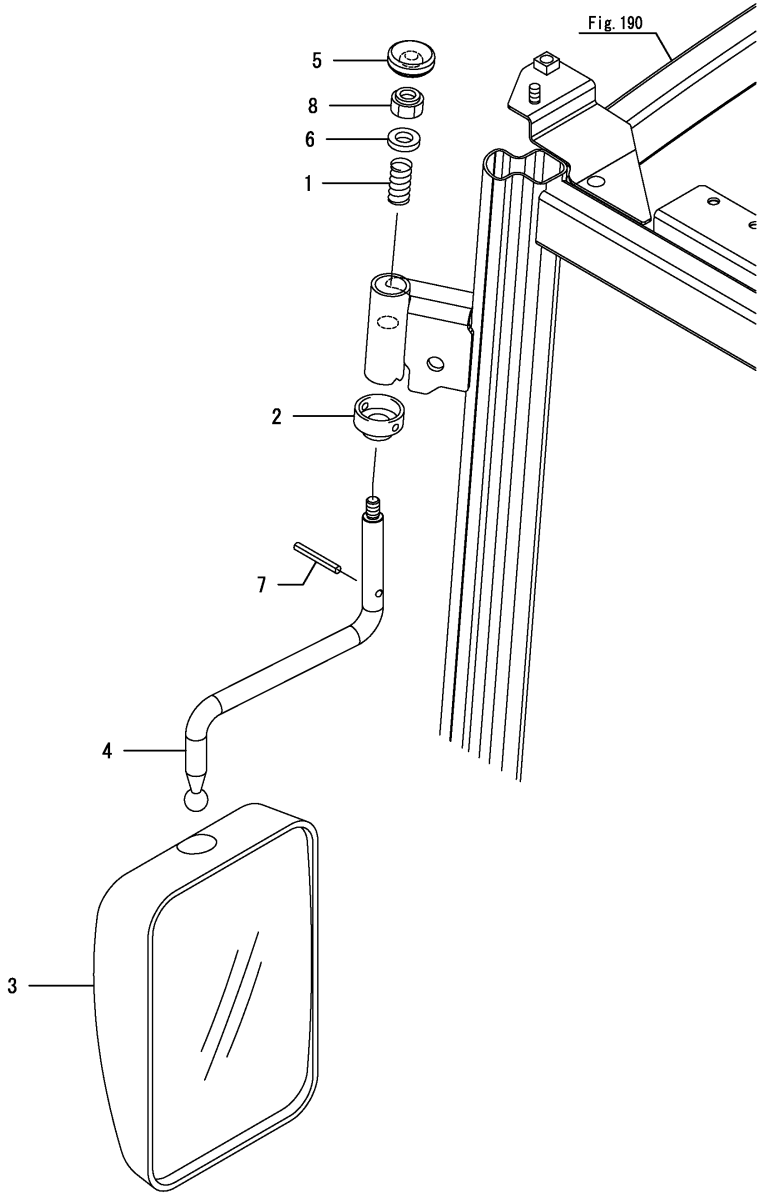

(A)=EG326Y (D)=EG334Y
(B)=EG328Y (E)=
(C)=EG330Y (F)=

No.	Lev.	Parts No.	Description	Q'ty (A)	(B)	(C)	(D)	(E)	(F)	I	R
1	1	198220-63340	SPRING, FRICTION	2	2	2	2				
2	1	198133-64400	GROMMET	2	2	2	2				
3	1	1A7320-64510	HEAD, MIRROR	2	2	2	2				
4	1	1A7210-85810	SHAFT, MIRROR	2	2	2	2				
5	1	1A8110-85860	COVER, MIRROR	2	2	2	2				
6	1	22137-120000	WASHER, 12	2	2	2	2				
7	1	22351-060050	PIN, SPRING 6.0X50	2	2	2	2				
8	1	26346-100002	NUT, M10	2	2	2	2				

N:Old $\overset{\text{Yes}}{\underset{\text{No}}{\leftrightarrows}}$ New, Q:Old $\overset{\text{No}}{\underset{\text{Yes}}{\leftrightarrows}}$ New, R:Old $\overset{\text{Yes}}{\underset{\text{Yes}}{\leftrightarrows}}$ New, S:Old $\overset{\text{No}}{\underset{\text{No}}{\leftrightarrows}}$ New, W:Add, Z:Discontinued, F:Interchangeable by set, K:Q'ty Change

Copyright (C) 2014 YANMAR CO., LTD. All RightsReserved.

Fig.200. LAMP

(A)=EG326Y
(B)=EG328Y
(C)=EG330Y
(D)=EG334Y
(E)=
(F)=

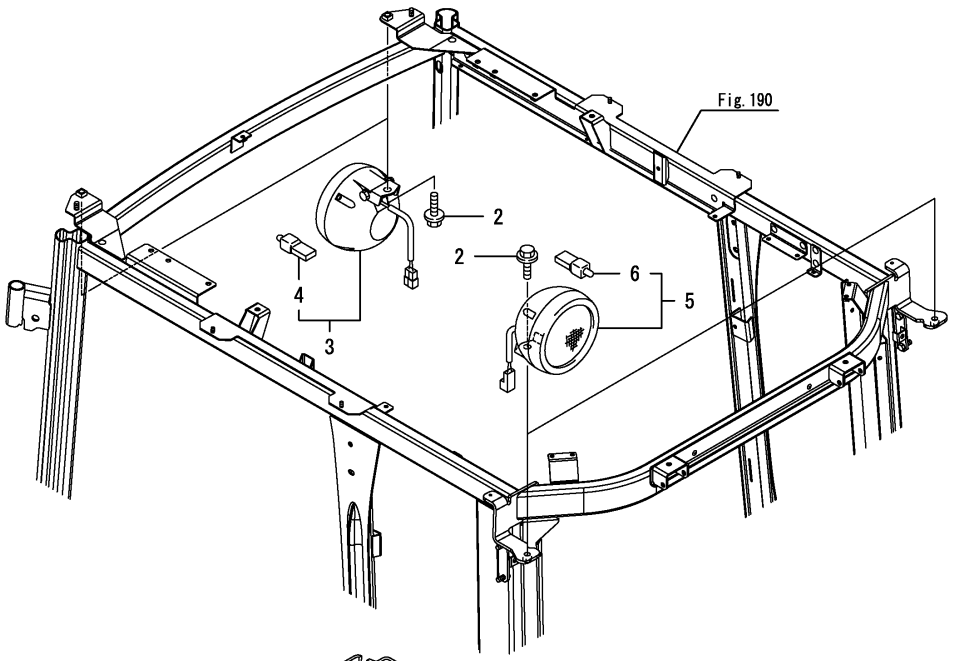

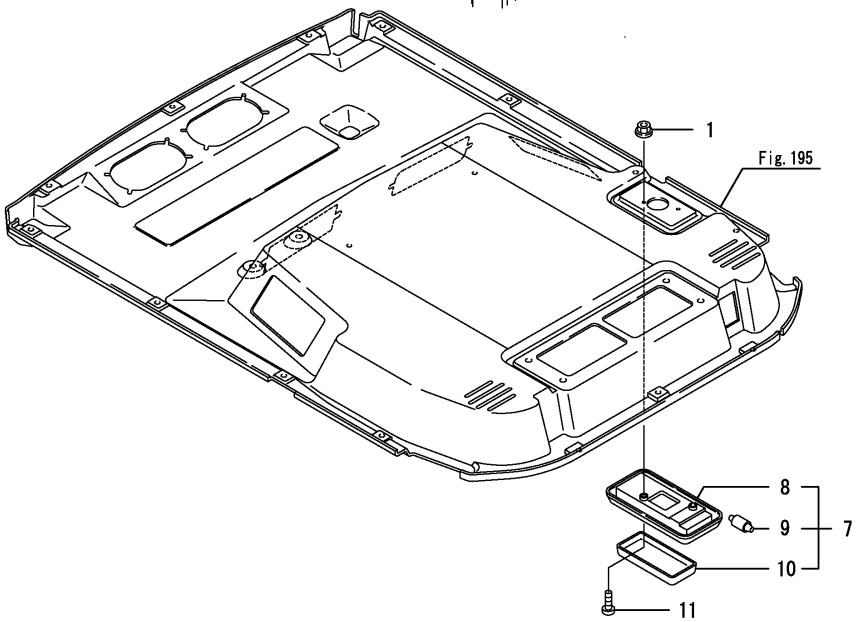

No.	Lev.	Parts No.	Description	Q'ty (A)	(B)	(C)	(D)	(E)	(F)	I	R
1	1	194990-22120	NUT, M5	2	2	2	2				
2	1	198071-85440	BOLT, M10X20	4	4	4	4				
3	1	1A7470-86250	LAMP ASSY, WORKING F	2	2	2	2				
4	2	1A7470-86270	BULB, 12V-35W	2	2	2	2				
5	1	1A7470-86350	LAMP ASSY, WORKING R	2	2	2	2				
6	2	1A7470-86270	BULB, 12V-35W	2	2	2	2				
7	1	197820-88750	LAMP ASSY, ROOM	1	1	1	1				
8	2	197820-88760	BODY	1	1	1	1				
9	2	197820-88770	BULB, 12V/8W	1	1	1	1				
10	2	197820-88780	LENS	1	1	1	1				
11	1	26557-050252	SCREW, M5X25	2	2	2	2				

N:Old $\xleftrightarrow[\text{No}]{\text{Yes}}$ New, Q:Old $\xleftrightarrow[\text{Yes}]{\text{No}}$ New, R:Old $\xleftrightarrow[\text{Yes}]{\text{Yes}}$ New, S:Old $\xleftrightarrow[\text{No}]{\text{No}}$ New, W:Add, Z:Discontinued, F:Interchangeable by set, K:Q'ty Change

Copyright (C) 2014 YANMAR CO., LTD. All RightsReserved.

Fig.303. LAMP(SIMPLE)

(A)=EG326Y
(B)=EG328Y
(C)=EG330Y
(D)=EG334Y
(E)=
(F)=

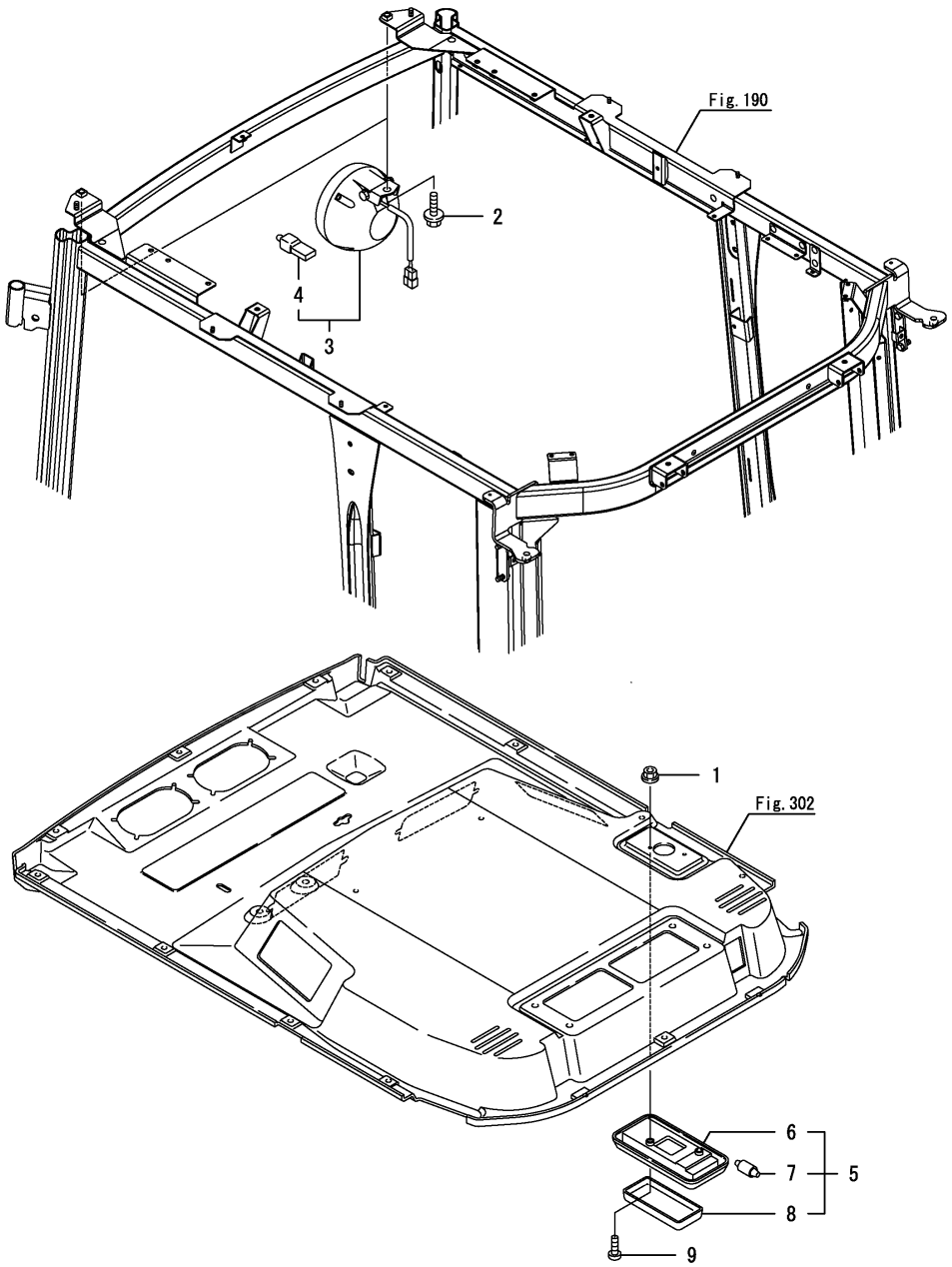

No.	Lev.	Parts No.	Description	Q'ty (A)	(B)	(C)	(D)	(E)	(F)	I	R
1	1	194990-22120	NUT, M5				2				
2	1	198071-85440	BOLT, M10X20				2				
3	1	1A7470-86250	LAMP ASSY, WORKING F				2				
4	2	1A7470-86270	BULB, 12V-35W				2				
5	1	197820-88750	LAMP ASSY, ROOM				1				
6	2	197820-88760	BODY				1				
7	2	197820-88770	BULB, 12V/8W				1				
8	2	197820-88780	LENS				1				
9	1	26557-050252	SCREW, M5X25				2				

N:Old $\xleftrightarrow[\text{No}]{\text{Yes}}$ New, Q:Old $\xleftrightarrow[\text{Yes}]{\text{No}}$ New, R:Old $\xleftrightarrow[\text{Yes}]{\text{Yes}}$ New, S:Old $\xleftrightarrow[\text{No}]{\text{No}}$ New, W:Add, Z:Discontinued, F:Interchangeable by set, K:Q'ty Change

Copyright (C) 2014 YANMAR CO., LTD. All RightsReserved.

Fig.201. SWITCH

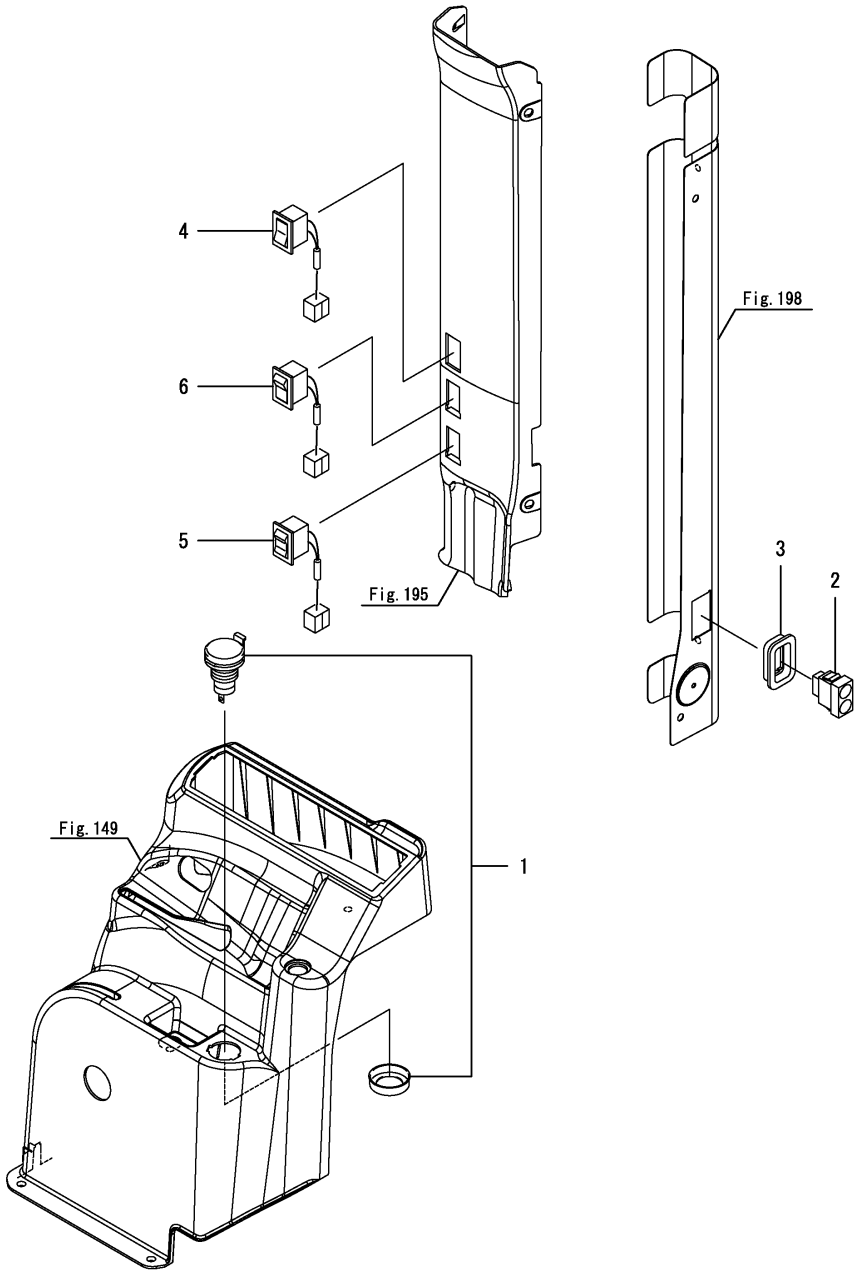

(A)=EG326Y
(B)=EG328Y
(C)=EG330Y
(D)=EG334Y
(E)=
(F)=

No.	Lev.	Parts No.	Description	Q'ty (A)	(B)	(C)	(D)	(E)	(F)	I	R
1	1	1D4270-17650	SOCKET, POWER SOUCE	1	1	1	1				
2	1	1A7591-52520	SWITCH, 2 POSITION	1	1	1	1				
3	1	1E8450-81370	BRACKET, SWITCH	1	1	1	1				
4	1	198094-86410	SWITCH, LAMP	1	1	1	1				
5	1	1A7210-86430	SWITCH, FRONT WIPER	1	1	1	1				
6	1	1A7210-86530	SWITCH, REAR WIPER	1	1	1	1				

N:Old $\xleftrightarrow[\text{No}]{\text{Yes}}$ New, Q:Old $\xleftrightarrow[\text{Yes}]{\text{No}}$ New, R:Old $\xleftrightarrow[\text{Yes}]{\text{Yes}}$ New, S:Old $\xleftrightarrow[\text{No}]{\text{No}}$ New, W:Add, Z:Discontinued, F:Interchangeable by set, K:Q'ty Change

Copyright (C) 2014 YANMAR CO., LTD. All RightsReserved.

Fig.304. SWITCH(SIMPLE)

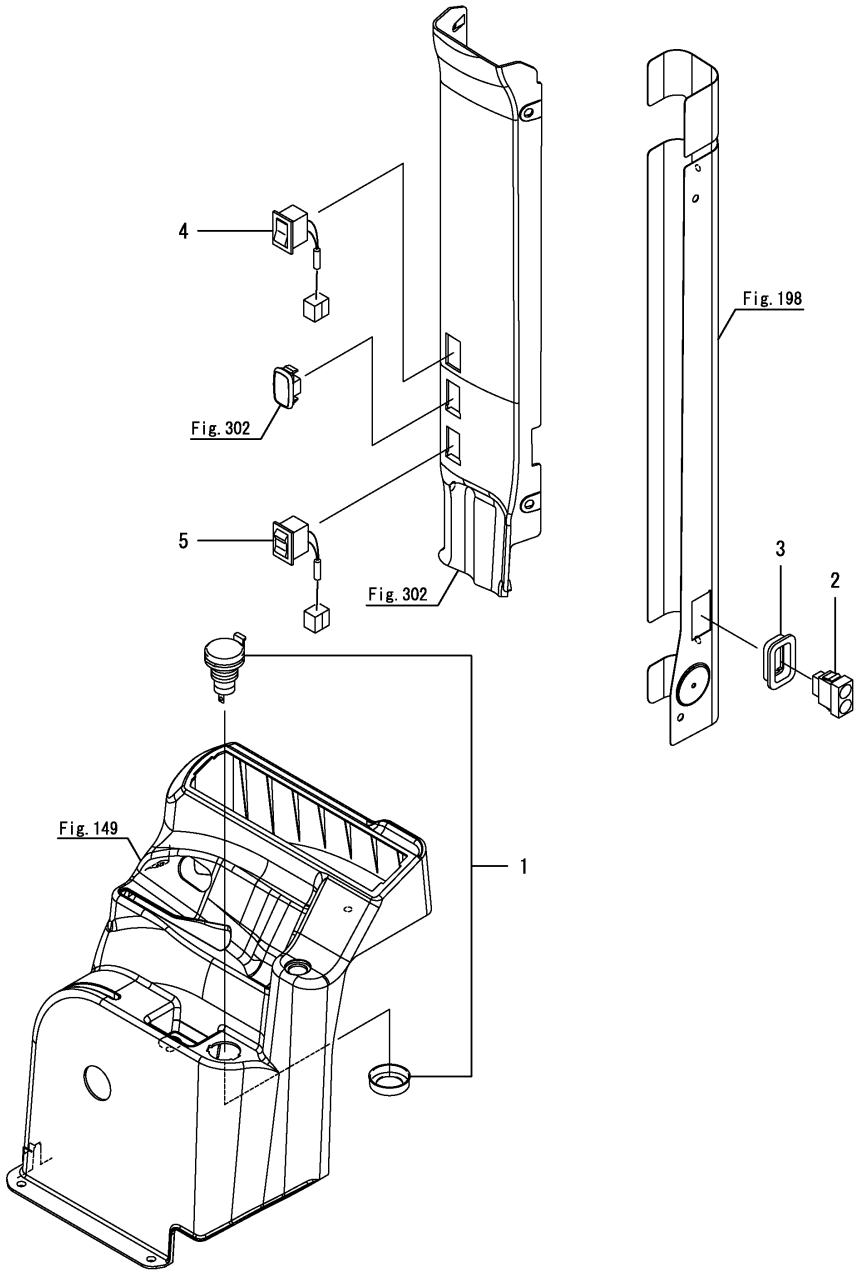

(A)=EG326Y (D)=EG334Y
(B)=EG328Y (E)=
(C)=EG330Y (F)=

No.	Lev.	Parts No.	Description	Q'ty (A)	(B)	(C)	(D)	(E)	(F)	I	R
1	1	1D4270-17650	SOCKET, POWER SOUCE				1				
2	1	1A7591-52520	SWITCH, 2 POSITION				1				
3	1	1E8450-81370	BRACKET, SWITCH				1				
4	1	198094-86410	SWITCH, LAMP				1				
5	1	1A7210-86430	SWITCH, FRONT WIPER				1				

N:Old $\xleftrightarrow[\text{No}]{\text{Yes}}$ New, Q:Old $\xleftrightarrow[\text{Yes}]{\text{No}}$ New, R:Old $\xleftrightarrow[\text{Yes}]{\text{Yes}}$ New, S:Old $\xleftrightarrow[\text{No}]{\text{No}}$ New, W:Add, Z:Discontinued, F:Interchangeable by set, K:Q'ty Change

Copyright (C) 2014 YANMAR CO., LTD. All RightsReserved.

Fig.202. FRONT WIPER

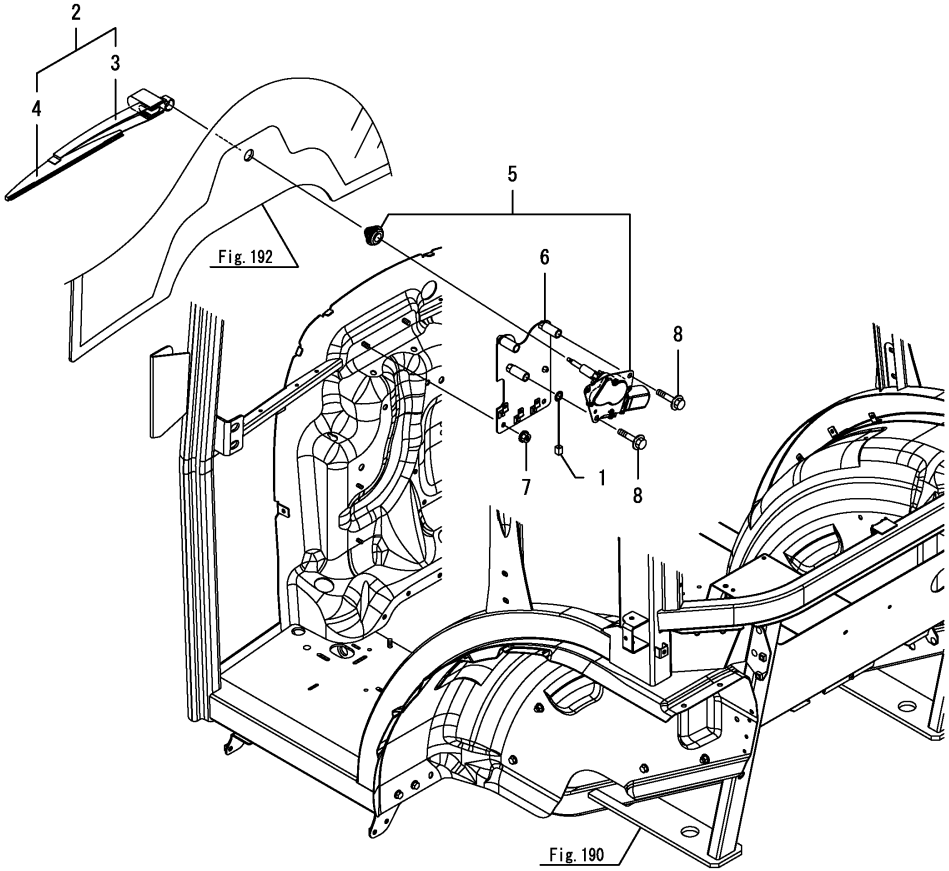

(A)=EG326Y (D)=EG334Y
(B)=EG328Y (E)=
(C)=EG330Y (F)=

No.	Lev.	Parts No.	Description	Q'ty (A)	(B)	(C)	(D)	(E)	(F)	I	R
1	1	1A7210-51190	CABLE, WIPER F	1	1	1	1				
2	1	1A7951-86550	ARM KIT, WIPER	1	1	1	1				
3	2	1A7951-86560	ARM, WIPER	1	1	1	1				
4	2	1A7951-86570	BLADE, WIPER	1	1	1	1				
5	1	1A7210-86610	MOTOR ASSY, WIPER	1	1	1	1				
6	1	1A7210-86680	BRACKET, WIPER MOTOR	1	1	1	1				
7	1	194990-22140	NUT, M8	2	2	2	2				
8	1	26106-100502	BOLT, M10X 50 PLATED	3	3	3	3				

N:Old $\xleftrightarrow[\text{No}]{\text{Yes}}$ New, Q:Old $\xleftrightarrow[\text{Yes}]{\text{No}}$ New, R:Old $\xleftrightarrow[\text{Yes}]{\text{Yes}}$ New, S:Old $\xleftrightarrow[\text{No}]{\text{No}}$ New, W:Add, Z:Discontinued, F:Interchangeable by set, K:Q'ty Change

Copyright (C) 2014 YANMAR CO., LTD. All RightsReserved.

Fig.203. FRONT WASHER NOZZLE

(A)=EG326Y
(B)=EG328Y
(C)=EG330Y
(D)=EG334Y
(E)=
(F)=

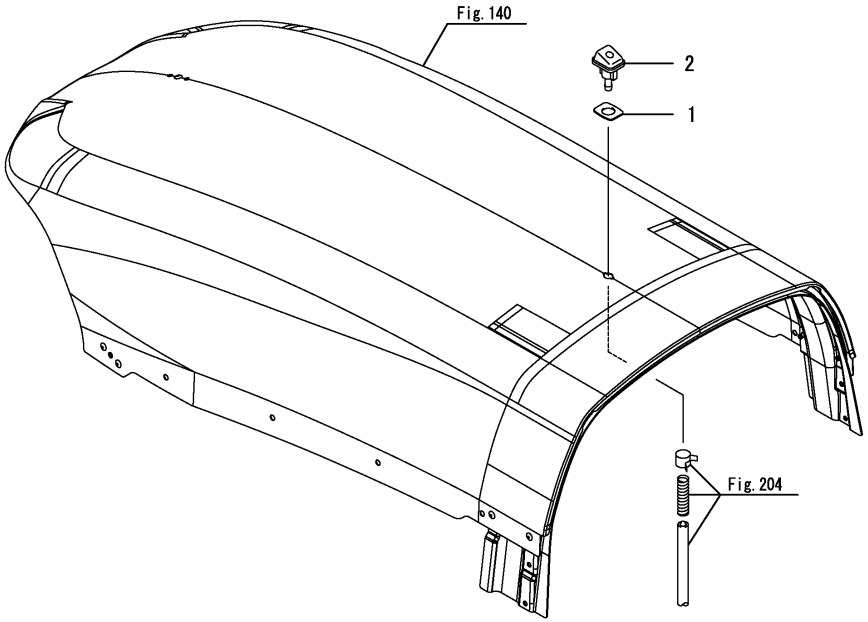

No.	Lev.	Parts No.	Description	Q'ty (A)	(B)	(C)	(D)	(E)	(F)	I	R
1	1	1A7320-61140	SPACER, NOZZLE	1	1	1	1				
2	1	198094-86060	NOZZLE, WASHER	1	1	1	1				

N:Old ◄Yes/No► New, Q:Old ◄No/Yes► New, R:Old ◄Yes/Yes► New, S:Old ◄No/No► New, W:Add, Z:Discontinued, F:Interchangeable by set, K:Q'ty Change

Copyright (C) 2014 YANMAR CO., LTD. All RightsReserved.

Fig.204. WASHER TANK

(A)=EG326Y
(B)=EG328Y
(C)=EG330Y
(D)=EG334Y
(E)=
(F)=

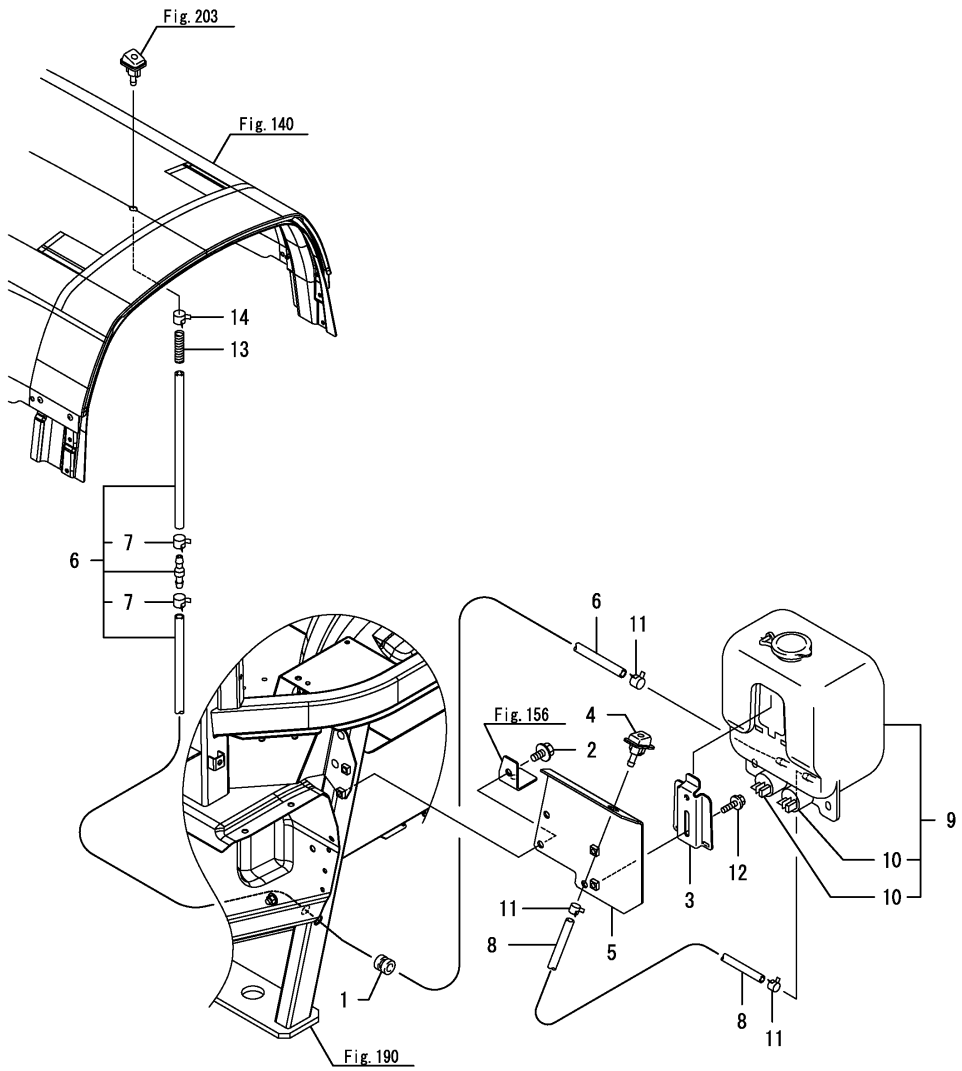

No.	Lev.	Parts No.	Description	Q'ty (A)	(B)	(C)	(D)	(E)	(F)	I	R
1	1	198360-03260	GROMMET, 12	1	1	1	1				
2	1	26106-080162	BOLT, M8X 16 PLATED	2	2	2	2				
3	1	120147-44810	BRACKET	1	1	1	1				
4	1	198094-86060	NOZZLE, WASHER	1	1	1	1				
5	1	1A7210-86080	BRACKET, TANK	1	1	1	1				
6	1	1A7170-86570	PIPE, FRONT WASHER	1	1	1	1				
7	2	23080-007000	CLAMP, 7	2	2	2	2				
8	1	198094-86580	HOSE, WASHER 400	1	1	1	1				
9	1	1A7320-86650	TANK ASSY, WASHER	1	1	1	1				
10	2	1A7320-86640	PUMP ASSY, WASHER	2	2	2	2				
11	1	23080-007000	CLAMP, 7	3	3	3	3				
12	1	26106-060162	BOLT, M6X 16 PLATED	2	2	2	2				
13	1	198094-86560	SPRING, NOZZLE	1	1	1	1				
14	1	23080-007000	CLAMP, 7	1	1	1	1				

N:Old $\xleftrightarrow[\text{No}]{\text{Yes}}$ New, Q:Old $\xleftrightarrow[\text{Yes}]{\text{No}}$ New, R:Old $\xleftrightarrow[\text{Yes}]{\text{Yes}}$ New, S:Old $\xleftrightarrow[\text{No}]{\text{No}}$ New, W:Add, Z:Discontinued, F:Interchangeable by set, K:Q'ty Change

Copyright (C) 2014 YANMAR CO., LTD. All RightsReserved.

Fig.305. WASHER TANK(SIMPLE)

(A)=EG326Y
(B)=EG328Y
(C)=EG330Y
(D)=EG334Y
(E)=
(F)=

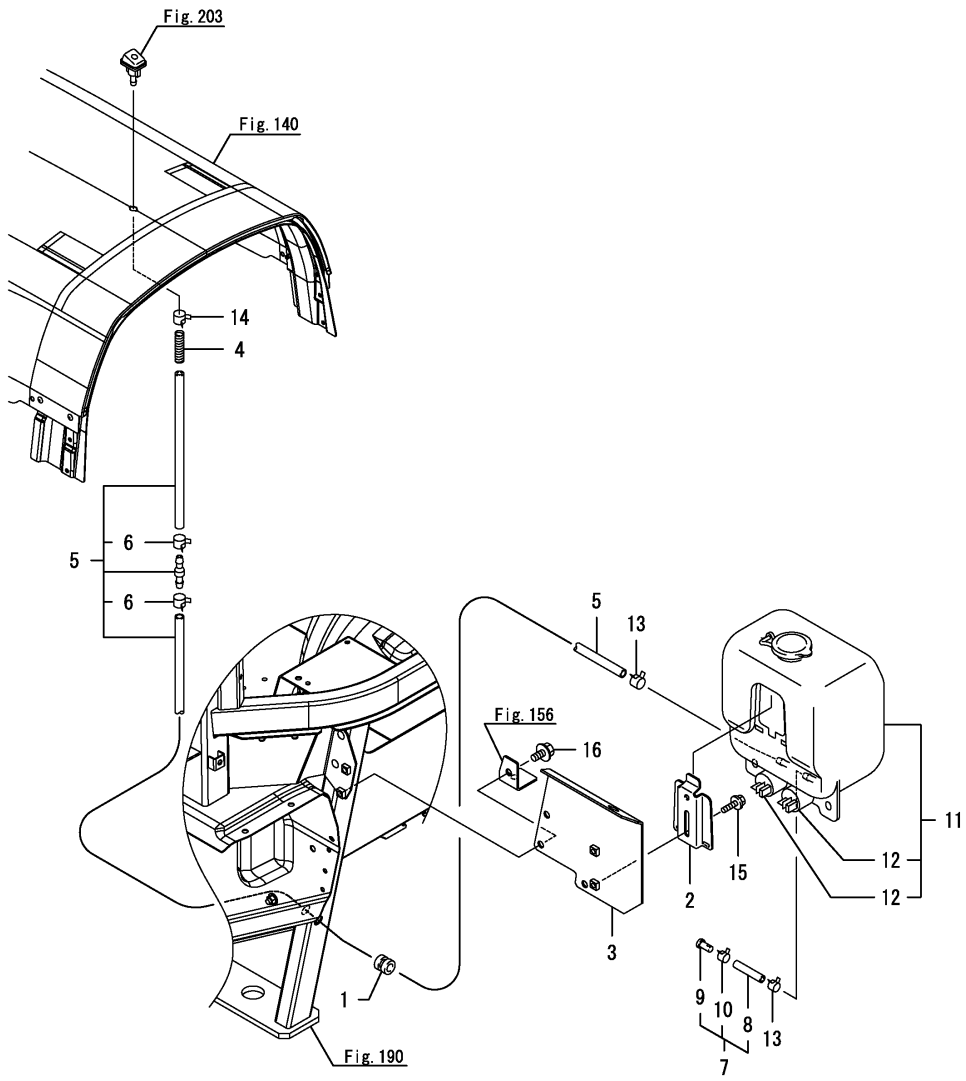

No.	Lev.	Parts No.	Description	Q'ty (A)	(B)	(C)	(D)	(E)	(F)	I	R
1	1	198360-03260	GROMMET, 12				1				
2	1	120147-44810	BRACKET				1				
3	1	1A7210-86080	BRACKET, TANK				1				
4	1	198094-86560	SPRING, NOZZLE				1				
5	1	1A7170-86570	PIPE, FRONT WASHER				1				
6	2	23080-007000	CLAMP, 7				2				
7	1	1A7170-86580	PIPE ASSY,REARWASHER				1				
8	2	1A7170-86590	HOSE,VALVE 30				1				
9	2	22487-050100	PIN, H 5X 10				1				
10	2	23080-007000	CLAMP, 7				1				
11	1	1A7320-86650	TANK ASSY, WASHER				1				
12	2	1A7320-86640	PUMP ASSY, WASHER				2				
13	1	23080-007000	CLAMP, 7				2				
14	1	23080-007000	CLAMP, 7				1				
15	1	26106-060162	BOLT, M6X 16 PLATED				2				
16	1	26106-080162	BOLT, M8X 16 PLATED				2				

N:Old $\overset{\text{Yes}}{\underset{\text{No}}{\leftrightarrows}}$ New, Q:Old $\overset{\text{No}}{\underset{\text{Yes}}{\leftrightarrows}}$ New, R:Old $\overset{\text{Yes}}{\underset{\text{Yes}}{\leftrightarrows}}$ New, S:Old $\overset{\text{No}}{\underset{\text{No}}{\leftrightarrows}}$ New, W:Add, Z:Discontinued, F:Interchangeable by set, K:Q'ty Change

Copyright (C) 2014 YANMAR CO., LTD. All RightsReserved.

Fig.205. REAR WIPER

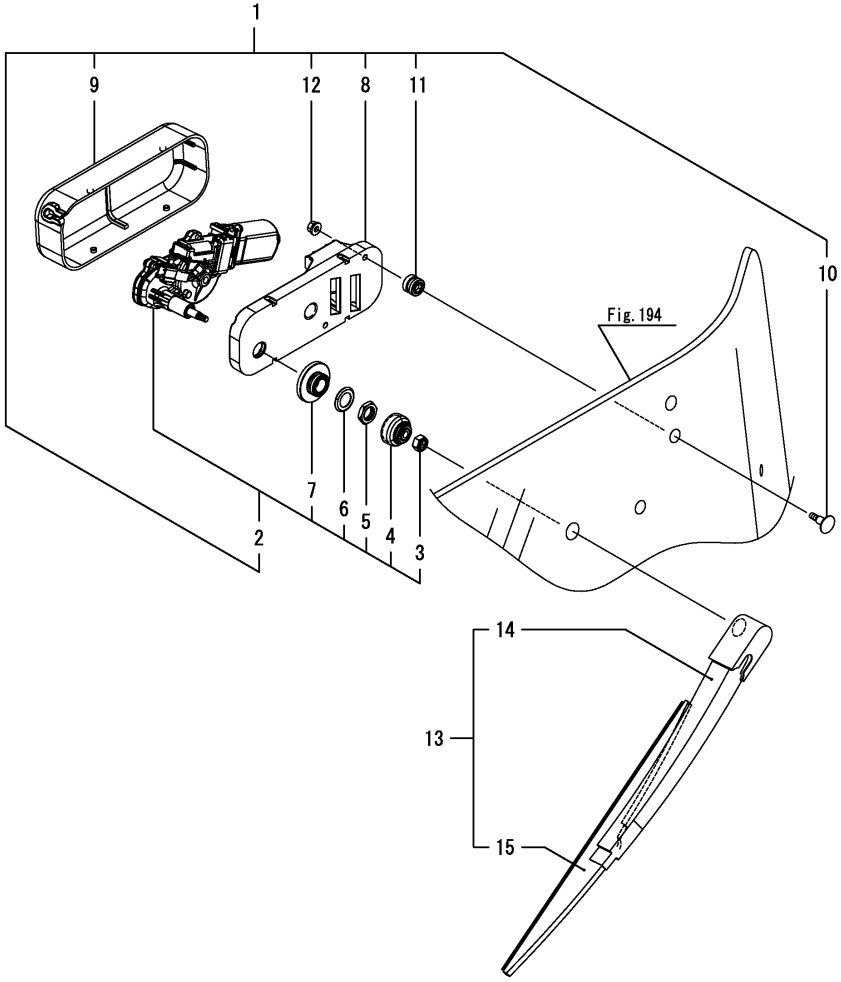

(A)=EG326Y (D)=EG334Y
(B)=EG328Y (E)=
(C)=EG330Y (F)=

No.	Lev.	Parts No.	Description	Q'ty (A)	(B)	(C)	(D)	(E)	(F)	I	R
1	1	1A7210-86300	MOTOR ASSY, WIPER R	1	1	1	1				
2	2	1A7210-86310	MOTOR ASSY	1	1	1	1				
3	3	1A8110-86330	NUT, M6	1	1	1	1				
4	3	1A8110-86340	CAP	1	1	1	1				
5	3	1A8110-86350	NUT, M16	1	1	1	1				
6	3	1A8110-86360	WASHER	1	1	1	1				
7	3	1A8110-86370	GASKET	1	1	1	1				
8	2	1A8110-86450	PLATE, BASE	1	1	1	1				
9	2	1A8110-86460	COVER, MOTOR	1	1	1	1				
10	2	1A8110-86470	BOLT, W/COLLAR	2	2	2	2				
11	2	1A8110-86480	GROMMET	2	2	2	2				
12	2	1A8110-86490	NUT, FLANGE M6	2	2	2	2				
13	1	1A8110-86400	ARM KIT, WIPER&BLADE	1	1	1	1				
14	2	1A8110-86410	ARM, WIPER	1	1	1	1				
15	2	1A8110-86420	BLADE, WIPER	1	1	1	1				

N:Old $\frac{\text{Yes}}{\text{No}}$ New, Q:Old $\frac{\text{No}}{\text{Yes}}$ New, R:Old $\frac{\text{Yes}}{\text{Yes}}$ New, S:Old $\frac{\text{No}}{\text{No}}$ New, W:Add, Z:Discontinued, F:Interchangeable by set, K:Q'ty Change

Copyright (C) 2014 YANMAR CO., LTD. All RightsReserved.

Fig.206. AUDIO

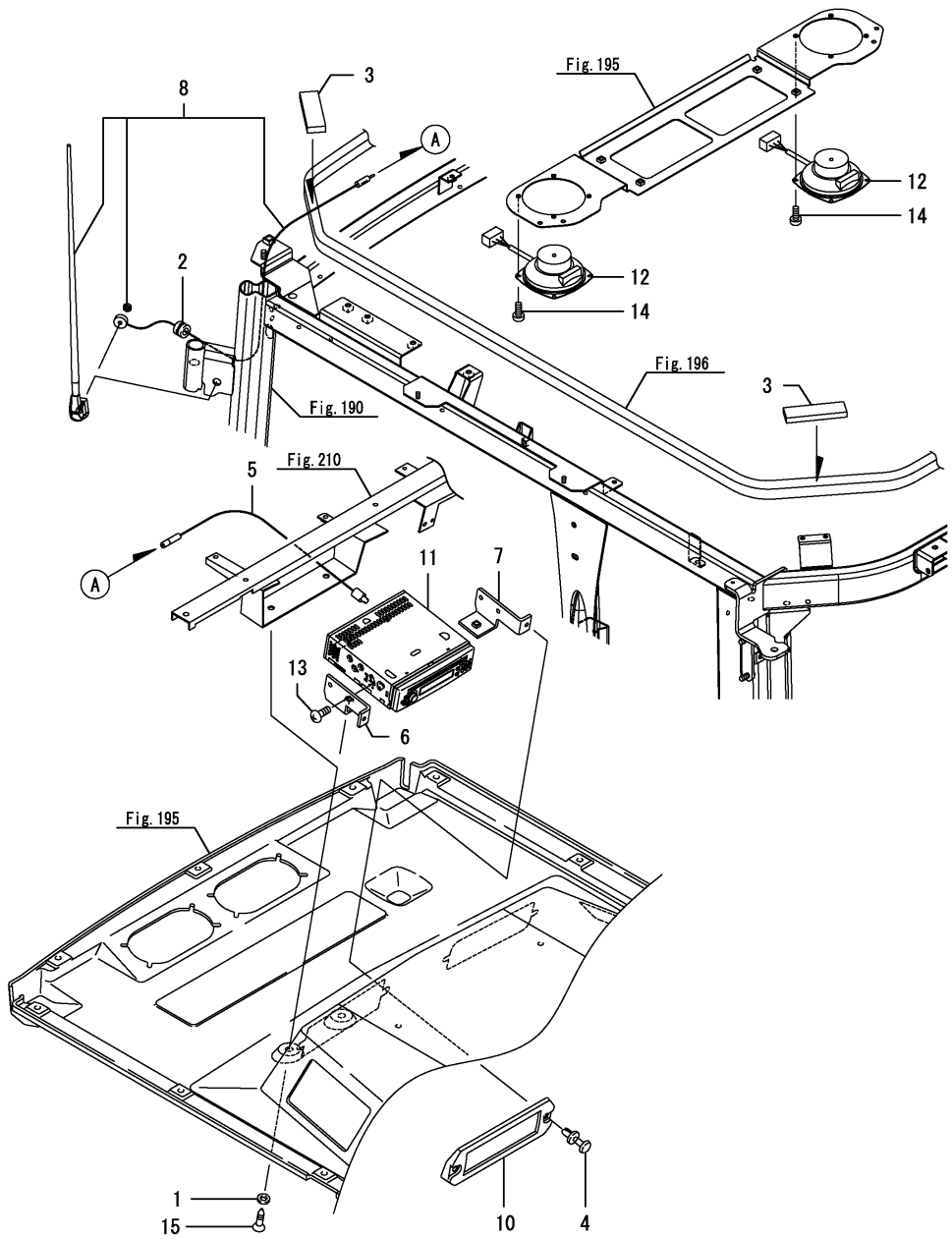

(A)=EG326Y (D)=EG334Y
(B)=EG328Y (E)=
(C)=EG330Y (F)=

No.	Lev.	Parts No.	Description	Q'ty (A)	(B)	(C)	(D)	(E)	(F)	I	R
1	1	194515-01190	WASHER, 6	2	2	2	2				
2	1	197830-85490	GROMMET	1	1	1	1				
3	1	198094-85570	SEAL, ROOF UPPER	4	4	4	4				
4	1	198010-85810	RIVET, NYLON	2	2	2	2				
5	1	1A7591-86330	WIRE, ANTENNA	1	1	1	1				
6	1	198463-86510	BRACKET, CASSETTE L	1	1	1	1				
7	1	198463-86520	BRACKET, CASSETTE R	1	1	1	1				
8	1	198463-86771	ANTENNA ASSY	1	1	1	1				
10	1	198463-86851	COVER, RADIO	1	1	1	1				
11	1	1A8110-86910	RADIO	1	1	1	1				
12	1	1A8110-86920	SPEAKER	2	2	2	2				
13	1	26021-050122	SCREW, M5X12	4	4	4	4				
14	1	26557-050122	SCREW, M5X12	8	8	8	8				
15	1	26589-060162	SCREW, M6	2	2	2	2				

N:Old $\xleftrightarrow[\text{No}]{\text{Yes}}$ New, Q:Old $\xleftrightarrow[\text{Yes}]{\text{No}}$ New, R:Old $\xleftrightarrow[\text{Yes}]{\text{Yes}}$ New, S:Old $\xleftrightarrow[\text{No}]{\text{No}}$ New, W:Add, Z:Discontinued, F:Interchangeable by set, K:Q'ty Change

Copyright (C) 2014 YANMAR CO., LTD. All RightsReserved.

Fig.207. AIR CONDITIONER SYSTEM(1)

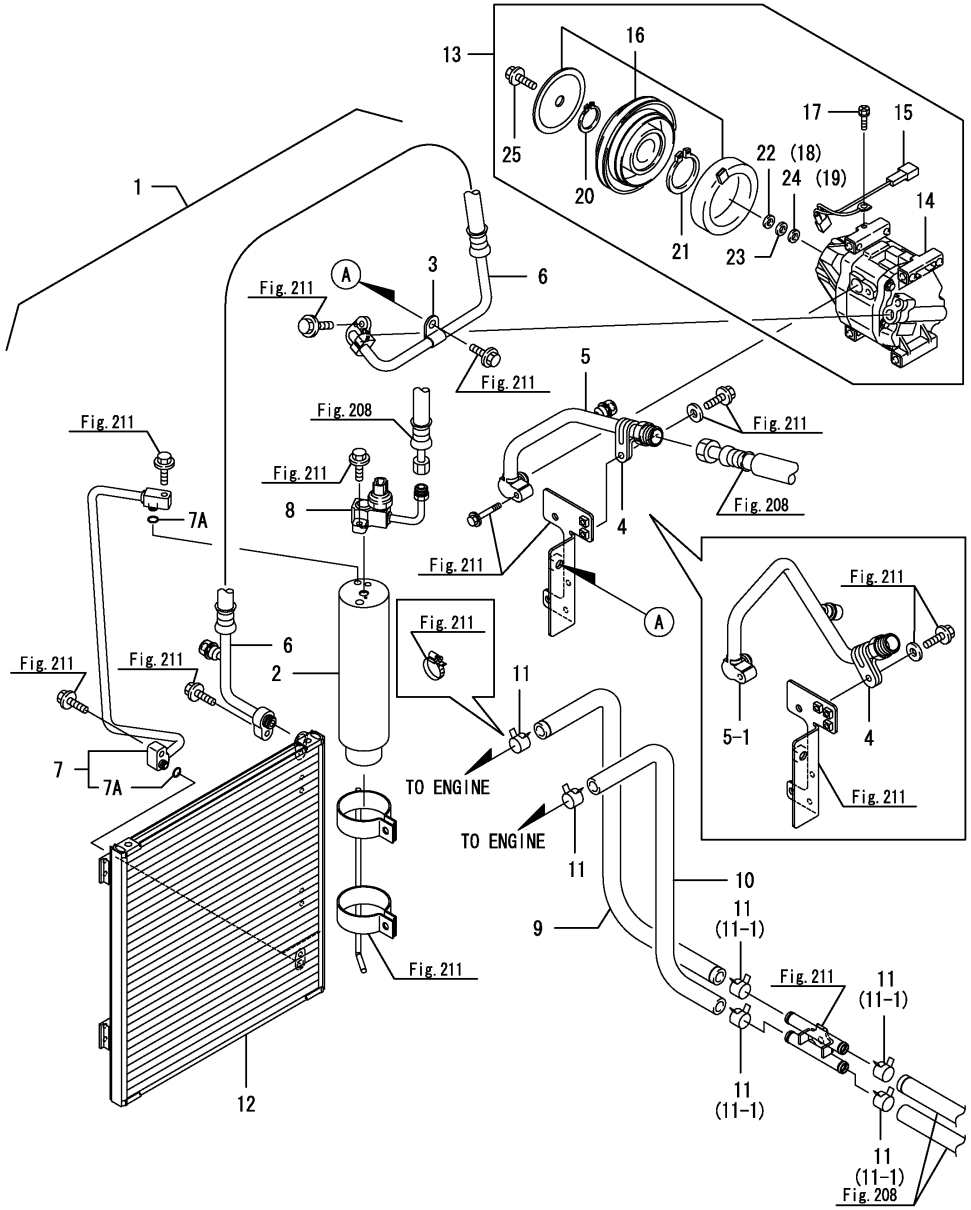

(A)=EG326Y (D)=EG334Y
(B)=EG328Y (E)=
(C)=EG330Y (F)=

No.	Lev.	Parts No.	Description	Q'ty (A)	(B)	(C)	(D)	(E)	(F)	I	R
1	1	1A7210-87020	CONDITIONER KIT, AIR	1	1	1	1				
1-1	1	1A7210-87021	CONDITIONER KIT, AIR	1	1	1	1			N	
	(A=F090103)	(B=F080104)	(C=F070104) (D=F060104)								
1-2	1	1A7170-87020	A KIT, A/C	1	1	1	1			S	
	(A=F090352)	(B=F080308)	(C=F070762) (D=F060684)								
1-3	1	1A7170-87021	A KIT, A/C	1	1	1	1			N	
	(A=F090518)	(B=F080423)	(C=F071151) (D=F061061)								
2	2	1A8110-87210	DRYER, RECEIVER	1	1	1	1				
3	2	1A7410-87580	CLAMP, 11.5	1	1	1	1			Z	
	(A=F090102)	(B=F080101)	(C=F070102) (D=F060101)								
4	2	1A7410-87630	CLAMP, 17.5	1	1	1	1				
5	2	1A7210-87920	PIPE ASSY, COMP-A/U	1	1	1	1				
5-1	2	1A7170-87920	PIPE ASSY, COMPR-A/U	1	1	1	1			S	
	(A=F090352)	(B=F080308)	(C=F070762) (D=F060684)								
6	2	1A7210-87931	HOSE ASSY, COMP-COND	1	1	1	1				
7	2	1A7210-87950	PIPE ASSY, COND-R/D	1	1	1	1				
7-1	2	1A7210-87951	PIPE ASSY, COND-R/D	1	1	1	1			N	
	(A=F090518)	(B=F080423)	(C=F071151) (D=F061061)								
7A	3	1A7030-88760	O-RING	2	2	2	2				
8	2	1A7210-87970	PIPE ASSY, R/D	1	1	1	1				
9	2	1A7210-88610	HOSE, HEATER INLET A	1	1	1	1				
10	2	1A7210-88620	HOSE, HEATER OUT A	1	1	1	1				
10-1	2	1A7210-88621	HOSE, HEATER OUT A	1	1	1	1			N	
	(A=F090103)	(B=F080104)	(C=F070104) (D=F060104)								
11	2	1A7030-88710	CLIP, HEATER HOSE	6	6	6	6				
11-1	2	1A7030-88710	CLIP, HEATER HOSE	4	4	4	4			K	
	(A=F090352)	(B=F080308)	(C=F070762) (D=F060684)								
12	1	1A7470-87120	CONDENSER ASSY	1	1	1	1				
13	1	1A7320-87902	COMPRESSOR ASSY	1	1	1	1				
13-1	1	1A7471-87900	COMPRESSOR ASSY,	1	1	1	1			N	
	(A=F090404)	(B=F080327)	(C=F070822) (D=F060757)								
14	2	1A7320-87892	COMPRESSOR	1	1	1	1				
15	2	1A7030-87911	HARNESS, WIRE	1	1	1	1				
16	2	1A7320-87922	CLUTCH ASSY, MAGNET	1	1	1	1				
16-1	2	1A7471-87920	CLUTCH ASSY, MAGNET	1	1	1	1			N	
	(A=F090404)	(B=F080327)	(C=F070822) (D=F060757)								
17	2	1A7320-87990	BOLT, M5X8	1	1	1	1				
18	2	1A7030-89860	WASHER, 0.6	1	1	1	1				
19	2	1A7030-89870	WASHER, 1.0	1	1	1	1				
20	2	1A7030-89930	RING, SNAP	1	1	1	1				
21	2	1A7030-89940	RING, SNAP	1	1	1	1				
22	2	1A7030-89950	WASHER, 0.1	1	1	1	1				
23	2	1A7030-89960	WASHER, 0.15	1	1	1	1				
24	2	1A7030-89970	WASHER, 0.4	1	1	1	1				
25	2	1A7030-89980	BOLT, M6X16	1	1	1	1				

N:Old $\overset{\text{Yes}}{\underset{\text{No}}{\leftrightarrow}}$ New, Q:Old $\overset{\text{No}}{\underset{\text{Yes}}{\leftrightarrow}}$ New, R:Old $\overset{\text{Yes}}{\underset{\text{Yes}}{\leftrightarrow}}$ New, S:Old $\overset{\text{No}}{\underset{\text{No}}{\leftrightarrow}}$ New, W:Add, Z:Discontinued, F:Interchangeable by set, K:Q'ty Change

Copyright (C) 2014 YANMAR CO., LTD. All RightsReserved.

Fig.208. AIR CONDITIONER SYSTEM(2)

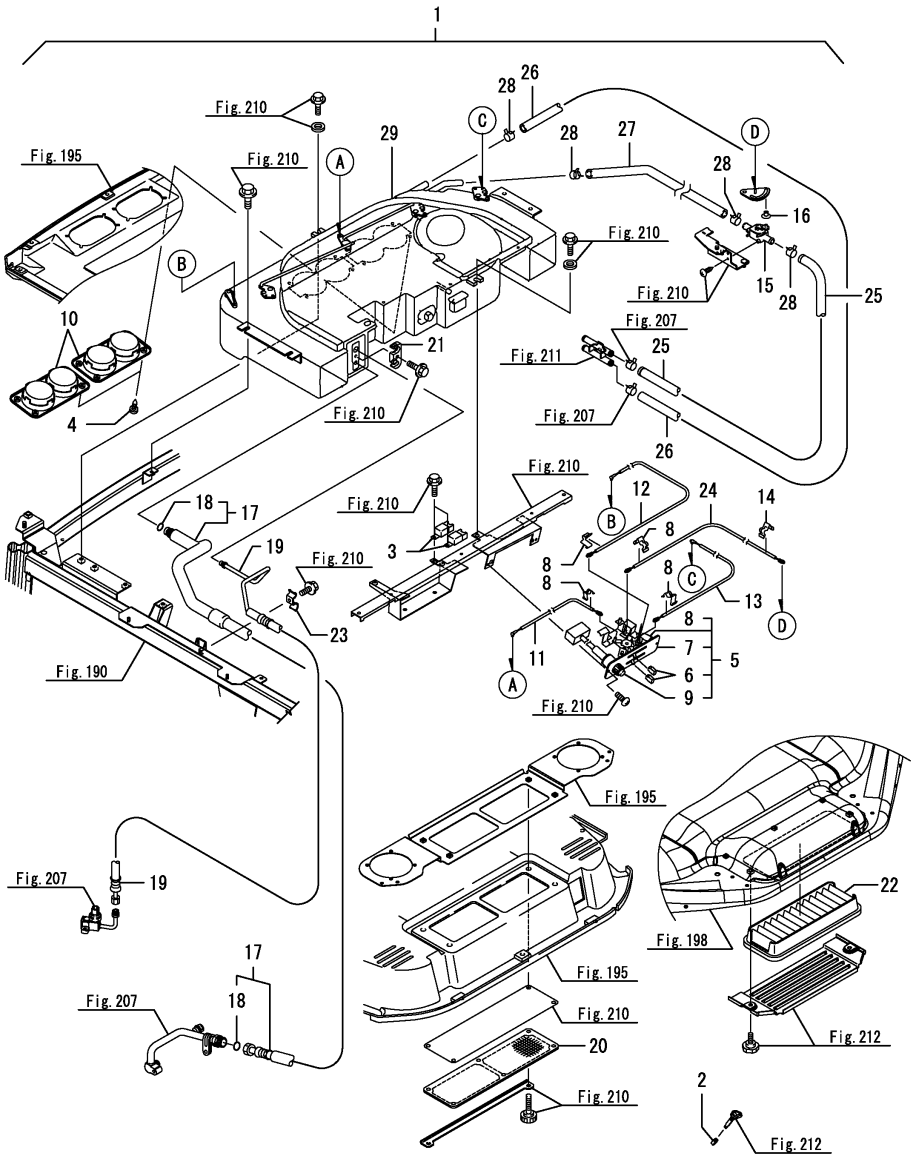

(A)=EG326Y (D)=EG334Y
(B)=EG328Y (E)=
(C)=EG330Y (F)=

No.	Lev.	Parts No.	Description	Q'ty (A)	(B)	(C)	(D)	(E)	(F)	I	R
1	1	1A7170-87030	CONDITIONER KIT, AIR	1	1	1	1				
1-1	1	1A7170-87031	CONDITIONER KIT, AIR	1	1	1	1			N	
	(A=F090103)	(B=F080104)	(C=F070104) (D=F060104)								
2	2	1E8545-80080	KNOB, CONTROL	1	1	1	1				
3	2	1A7030-86980	RELAY	2	2	2	2				
4	2	1A7030-87040	SCREW, TAPPING M5X20	8	8	8	8				
5	2	1A7030-87151	CONTROLLER ASSY	1	1	1	1				
6	3	1E8545-80080	KNOB, CONTROL	2	2	2	2				
7	3	1A7030-87190	PANEL	1	1	1	1				
8	3	1A7030-87790	CLAMP, CABLE	4	4	4	4				
9	3	1A7030-88210	SWITCH ASSY	1	1	1	1				
10	2	198208-87410	GRILLE ASSY	2	2	2	2				
11	2	1A7030-87760	CABLE, MIX	1	1	1	1				
12	2	1A7030-87770	CABLE, FACE	1	1	1	1				
13	2	1A7030-87780	CABLE, FACE	1	1	1	1				
14	2	1A7030-87790	CLAMP, CABLE	1	1	1	1				
15	2	1A7030-87810	VALVE ASSY, WATER	1	1	1	1				
16	2	1A7030-87850	BUSH, VALVE	1	1	1	1				
17	2	1A7710-87940	HOSE ASSY	1	1	1	1				
18	3	1A7030-88840	O-RING	2	2	2	2				
19	2	1A7170-87960	HOSE ASSY	1	1	1	1				
20	2	1A7030-87970	FILTER	1	1	1	1				
21	2	198208-87980	CONNECTOR, HORSE	1	1	1	1				
22	2	1A7030-87990	FILTER	1	1	1	1				
23	2	1A7030-88060	CLAMP, HOSE	1	1	1	1				
24	2	1A7470-88420	CABLE, W/V	1	1	1	1				
24-1	2	1A7030-87741	CABLE, W/V	1	1	1	1			N	
	(A=F090716)	(B=F080596)	(C=F071704) (D=F061533)								
25	2	1A7210-88630	HOSE, HEATER IN B	1	1	1	1				
25-1	2	1A7170-88630	HOSE, HEATER IN B	1	1	1	1			N	
	(A=F090103)	(B=F080104)	(C=F070104) (D=F060104)								
26	2	1A7210-88640	HOSE, HEATER OUT B	1	1	1	1				
26-1	2	1A7170-88640	HOSE, HEATER OUT B	1	1	1	1			N	
	(A=F090103)	(B=F080104)	(C=F070104) (D=F060104)								
27	2	1A7030-88650	HOSE, HEATER IN C	1	1	1	1				
28	2	1A7030-88710	CLIP, HOSE	4	4	4	4				
29	1	1A7030-87201	CONDITIONER ASSY,AIR	1	1	1	1				1

Remarks
(1)Inner parts are shown in Fig.209.

N:Old $\overset{\text{Yes}}{\underset{\text{No}}{\leftrightarrow}}$ New, Q:Old $\overset{\text{No}}{\underset{\text{Yes}}{\leftrightarrow}}$ New, R:Old $\overset{\text{Yes}}{\underset{\text{Yes}}{\leftrightarrow}}$ New, S:Old $\overset{\text{No}}{\underset{\text{No}}{\leftrightarrow}}$ New, W:Add, Z:Discontinued, F:Interchangeable by set, K:Q'ty Change

Copyright (C) 2014 YANMAR CO., LTD. All RightsReserved.

Fig.209. AIR CONDITIONER(UNIT)

(A)=EG326Y
(B)=EG328Y
(C)=EG330Y
(D)=EG334Y
(E)=
(F)=

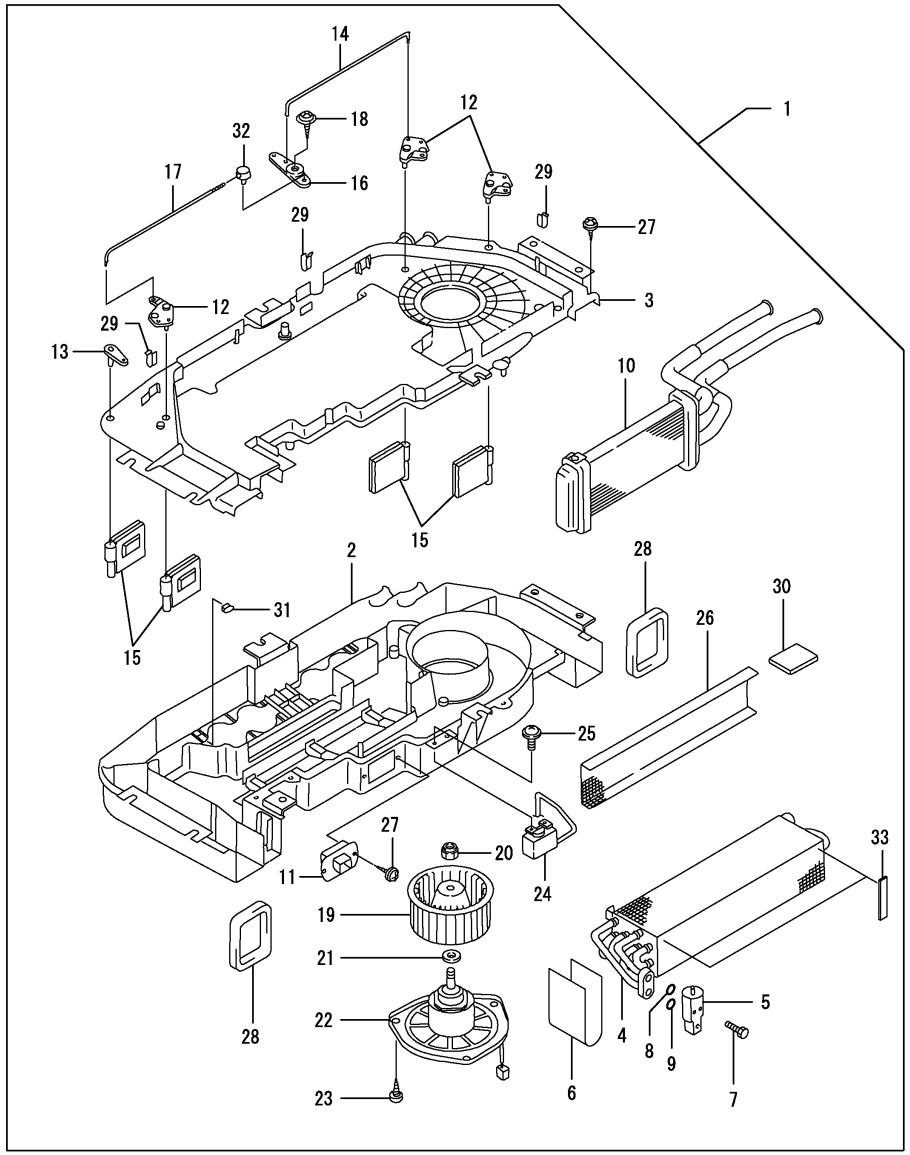

No.	Lev.	Parts No.	Description	Q'ty (A)	(B)	(C)	(D)	(E)	(F)	I	R
1	1	1A7030-87201	CONDITIONER ASSY,AIR	1	1	1	1				
2	2	1A7030-87211	CASE, LOWER	1	1	1	1				
3	2	1A7030-87220	CASE	1	1	1	1				
4	2	1A7030-88180	EVAPORATOR ASSY	1	1	1	1				
5	2	1A7030-88190	VALVE, EXPANSION	1	1	1	1				
6	2	1A7030-88200	GASKET	1	1	1	1				
7	2	1A7030-88230	BOLT, M5X50	2	2	2	2				
8	2	1A7030-88820	O-RING	1	1	1	1				
9	2	1A7030-88840	O-RING	1	1	1	1				
10	2	1A7030-87240	CORE ASSY, HEATER	1	1	1	1				
11	2	1A7030-87251	REGISTER, BLOWER	1	1	1	1				
12	2	1A7030-87270	LEVER ASSY, MIX DOOR	3	3	3	3				
13	2	1A7030-87280	LEVER ASSY, DOOR	1	1	1	1				
14	2	1A7030-87290	SHAFT, MIX DOOR R	1	1	1	1				
15	2	1A7030-87300	DOOR ASSY, S/A	4	4	4	4				
16	2	1A7030-87310	LEVER ASSY, MIX LINK	1	1	1	1				
17	2	1A7030-87330	SHAFT, MIX DOOR L	1	1	1	1				
18	2	1A7030-87340	SCREW, TAPPING	1	1	1	1				
19	2	1A7030-87350	FAN, BLOWER	1	1	1	1				
20	2	1A7030-87360	NUT	1	1	1	1				
21	2	1A7030-88070	WASHER	1	1	1	1				
22	2	1A7030-88080	MOTOR ASSY, BLOWER	1	1	1	1				
23	2	1A7030-88090	SCREW, TAPPING	3	3	3	3				
24	2	1A7030-88101	THERMOSTAT ASSY	1	1	1	1				
25	2	1A7030-88110	SCREW	2	2	2	2				
26	2	1A7030-88120	SCREEN	1	1	1	1				
27	2	1A7030-88130	SCREW, TAPPING	22	22	22	22				
28	2	1A7030-88140	GASKET	2	2	2	2				
29	2	1A7030-88150	CLAMP, LOCK D6	3	3	3	3				
30	2	1A7030-88160	INSULATOR	2	2	2	2				
31	2	1A7030-88170	NUT, SPEED	8	8	8	8				
32	2	1A7030-88250	CLAMP	1	1	1	1				
33	2	1A7470-88280	PACKING, B	2	2	2	2				

Remarks
* These figures are details of an inner part of Fig.208 No.29.

N:Old ◄Yes/No► New, Q:Old ◄No/Yes► New, R:Old ◄Yes/Yes► New, S:Old ◄No/No► New, W:Add, Z:Discontinued, F:Interchangeable by set, K:Q'ty Change

Copyright (C) 2014 YANMAR CO., LTD. All RightsReserved.

Fig.210. AIR CONDITIONER(1)

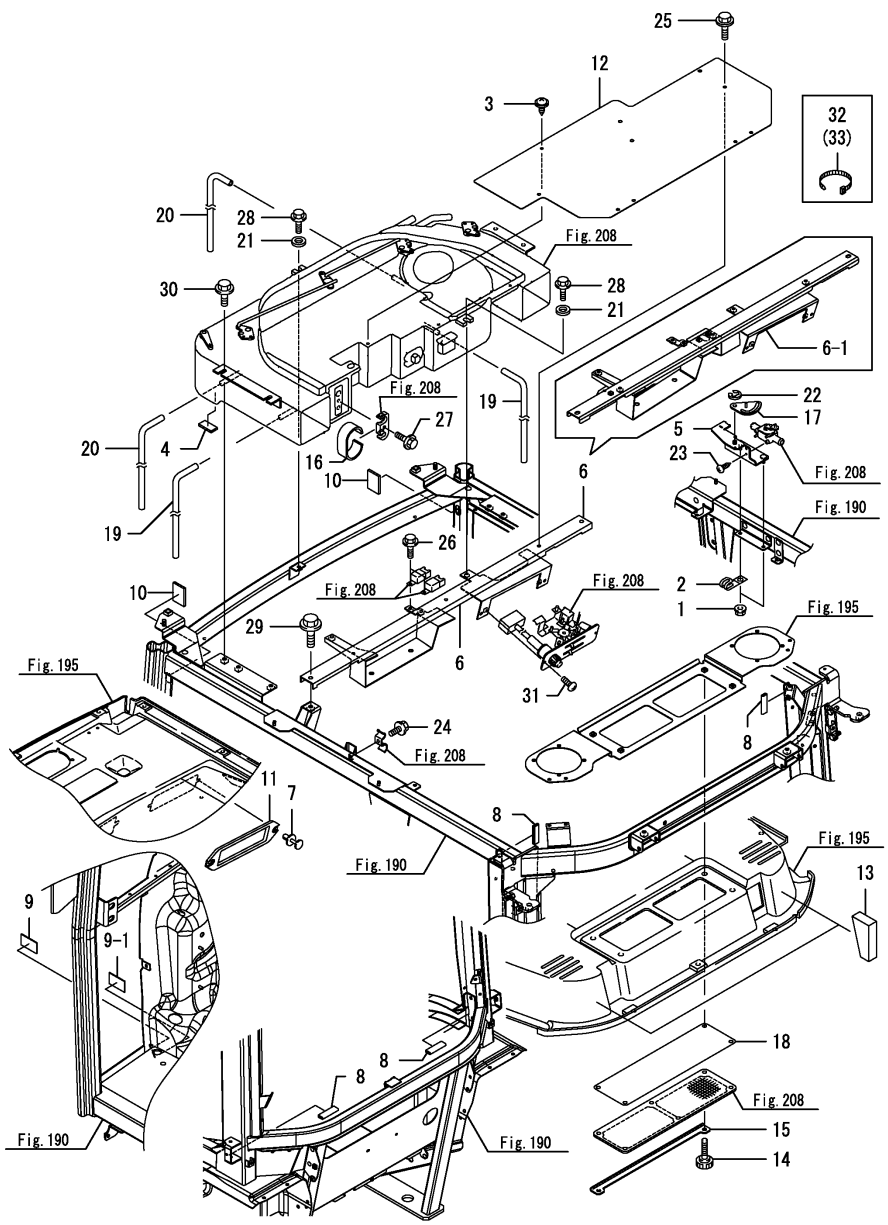

(A)=EG326Y (D)=EG334Y
(B)=EG328Y (E)=
(C)=EG330Y (F)=

No.	Lev.	Parts No.	Description	Q'ty (A)	(B)	(C)	(D)	(E)	(F)	I	R
1	1	194990-22130	NUT, M6	2	2	2	2				
2	1	194440-51630	CLAMP, HARNESS	1	1	1	1				
3	1	194940-61790	SCREW, TAPPING M5X16	3	3	3	3				
4	1	198240-61880	STOPPER, RADIATOR	2	2	2	2				
5	1	1A7030-80940	BRACKET, VALVE	1	1	1	1				
6	1	1A7030-81190-1	FRAME ASSY	1	1	1	1				
6-1	1	1A7210-81190-1	FRAME ASSY, AIR CON	1	1	1	1			F	1
	(A=F090108)	(B=F080596)	(C=F070860)	(D=F061533)							
7	1	1A8110-84210	RIVET, PUSH	2	2	2	2				
8	1	198093-84810	SEAL, FENDER	4	4	4	4				
9	1	198093-84810	SEAL, FENDER	2	2	2	2				
9-1	1	198093-84810	SEAL, FENDER	4	4	4	4			K	
	(A=F090352)	(B=F080308)	(C=F070762)	(D=F060684)							
10	1	198463-85610	SEAL, FILTER	2	2	2	2				
11	1	1A7030-86870	COVER, PANEL	1	1	1	1				
12	1	1A7210-87450	PLATE, SEAL	1	1	1	1				
13	1	1A7030-87470	SEAL, INNER ROOF	2	2	2	2				
14	1	198463-87630	KNOB, FILTER	4	4	4	4				
15	1	1A7030-87720	STAY, FILTER	1	1	1	1				
16	1	1A7030-87730	PAD, HOSE	1	1	1	1				
17	1	1A7030-87820	LINK, VALVE	1	1	1	1				
18	1	1A7030-88680	FILTER	1	1	1	1				
19	1	1A7320-88970	HOSE, DRAIN RL	2	2	2	2				
20	1	198208-88980	HOSE, DRAIN RR	2	2	2	2				
21	1	22157-060000	WASHER, 6	3	3	3	3				
22	1	22272-000060	RING, E- 6	1	1	1	1				
23	1	22857-400100	SCREW, 4X10	2	2	2	2				
24	1	26106-060102	BOLT, M6X 10 PLATED	1	1	1	1				
25	1	26106-060122	BOLT, M6X 12 PLATED	3	3	3	3				
26	1	26106-060122	BOLT, M6X 12 PLATED	2	2	2	2				
27	1	26106-060202	BOLT, M6X 20 PLATED	1	1	1	1				
28	1	26106-060202	BOLT, M6X 20 PLATED	3	3	3	3				
29	1	26106-080162	BOLT, M8X 16 PLATED	2	2	2	2				
30	1	26106-080162	BOLT, M8X 16 PLATED	4	4	4	4				
31	1	26559-050162	SCREW, M5X16	2	2	2	2				
32	1	29622-250001	BAND, RF250	1	1	1	1				
32-1	1	29622-140001	BAND, RF140	1	1	1	1			R	
	(A=F090716)	(B=F080596)	(C=F071704)	(D=F061533)							
33	1	29622-250001	BAND, RF250	1	1	1	1				

Remarks
(1)Interchangeable by simultaneous replacement with Fig.190 No.4-1 & Fig.195 No.7-1,23-1.

N:Old $\overset{\text{Yes}}{\underset{\text{No}}{\leftrightarrow}}$ New, Q:Old $\overset{\text{No}}{\underset{\text{Yes}}{\leftrightarrow}}$ New, R:Old $\overset{\text{Yes}}{\underset{\text{Yes}}{\leftrightarrow}}$ New, S:Old $\overset{\text{No}}{\underset{\text{No}}{\leftrightarrow}}$ New, W:Add, Z:Discontinued, F:Interchangeable by set, K:Q'ty Change

Copyright (C) 2014 YANMAR CO., LTD. All RightsReserved.

Fig.211. AIR CONDITIONER(2)

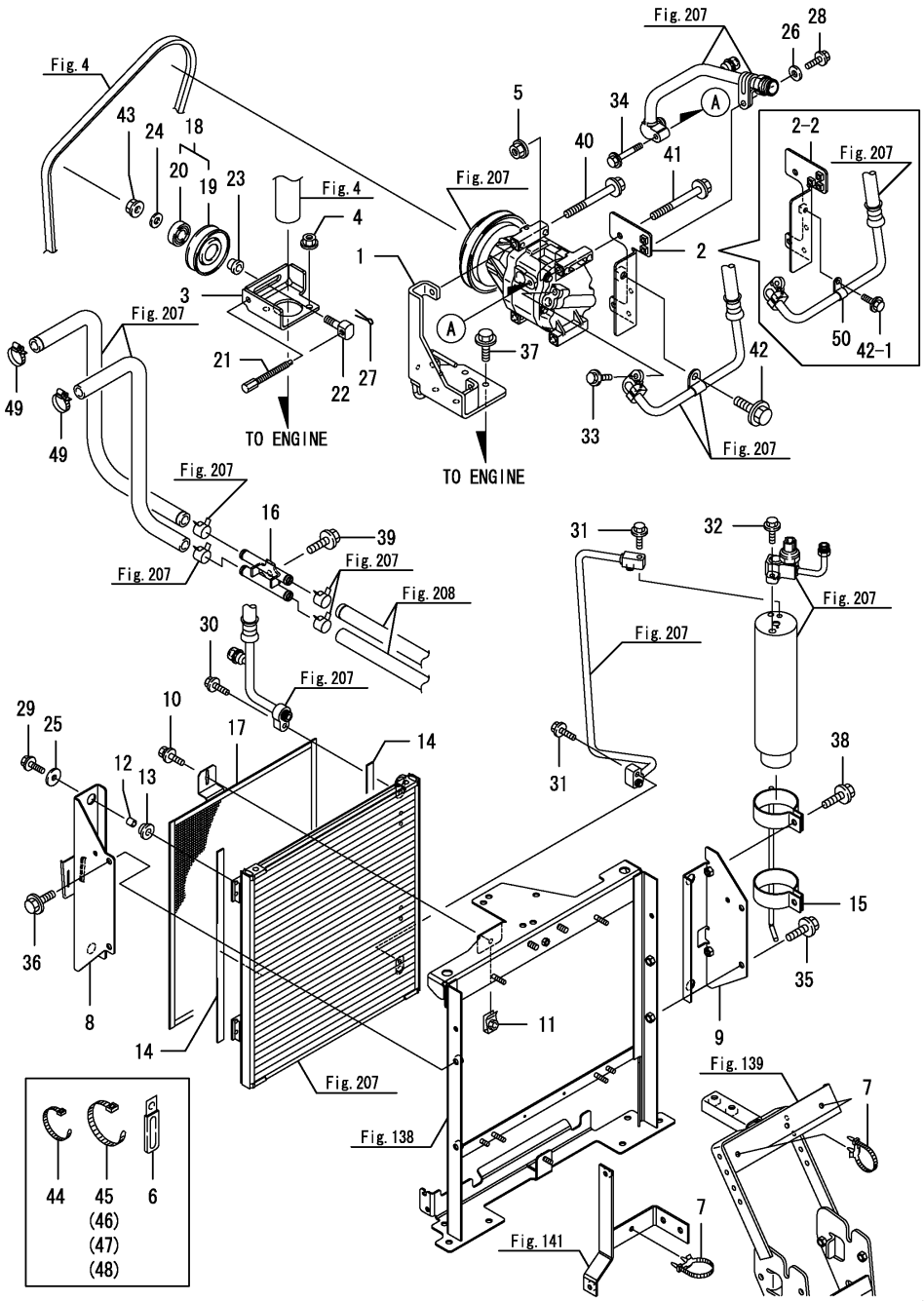

(A)=EG326Y (D)=EG334Y
(B)=EG328Y (E)=
(C)=EG330Y (F)=

No.	Lev.	Parts No.	Description	Q'ty (A)	(B)	(C)	(D)	(E)	(F)	I	R
1	1	1A7210-02801	BRACKET ASSY	1	1	1	1				
2	1	1A7210-02831	BRACKET, HOSE	1	1	1	1				
2-1	1	1A7210-02832	BRACKET ASSY,AC HOSE	1	1	1	1			N	
	(A=F090214)	(B=F080205)	(C=F070418) (D=F060420)								
2-2	1	1A7210-02833	BRACKET ASSY,AC HOSE	1	1	1	1			S	
	(A=F090102)	(B=F080101)	(C=F070102) (D=F060101)								
3	1	1A7210-02850	SUPPORT, PULLEY	1	1	1	1				
4	1	194990-22140	NUT, M8	2	2	2	2				
5	1	194990-22140	NUT, M8	1	1	1	1				
6	1	198448-51460	CLAMP, HARNESS	1	1	1	1				
7	1	194680-51670	BAND, CLIP	3	3	3	3				
8	1	1A7210-60251	STAY ASSY, CONDENSER	1	1	1	1				
9	1	1A7210-60271	STAY ASSY, CONDENSER	1	1	1	1				
10	1	198072-60590	BOLT, M6X20	1	1	1	1				
11	1	198071-61890	NUT, SPEED M6	1	1	1	1				
12	1	198129-78710	SPACER, 6-10	4	4	4	4				
13	1	198129-78720	GROMMET, 10-16	4	4	4	4				
14	1	1A7470-87110	SEAL, RUBBER	2	2	2	2				
15	1	1A7210-87140	BRACKET ASSY	1	1	1	1				
16	1	1A7210-88700	PIPE ASSY, HEATER	1	1	1	1				
17	1	1A7210-88900	SCREEN, CONDENSER	1	1	1	1				
18	1	129457-96200	PULLEY ASSY, TENSION	1	1	1	1				
19	2	129457-96230	PULLEY, TENSION	1	1	1	1				
20	2	24104-062024	BEARING, BALL 6202UU	1	1	1	1				
21	1	129054-96970	BOLT, ADJUSTER	1	1	1	1				
22	1	129054-96980	BOLT	1	1	1	1				
22-1	1	129972-96980	BOLT	1	1	1	1			R	
	(A=F090623)	(B=F080520)	(C=F071442) (D=F061308)								
23	1	129054-96990	SPACER	1	1	1	1				
24	1	22137-100000	WASHER, 10	1	1	1	1				
25	1	22157-060000	WASHER, 6	4	4	4	4				
26	1	22157-060000	WASHER, 6	1	1	1	1				
27	1	22417-160120	PIN, COTTER 1.6X12	1	1	1	1				
28	1	26106-060162	BOLT, M6X 16 PLATED	1	1	1	1				
29	1	26106-060202	BOLT, M6X 20 PLATED	4	4	4	4				
30	1	26106-060252	BOLT, M6X 25 PLATED	1	1	1	1				
31	1	26106-060252	BOLT, M6X 25 PLATED	2	2	2	2				
32	1	26106-060252	BOLT, M6X 25 PLATED	1	1	1	1				
33	1	26106-060352	BOLT, M6X 35 PLATED	1	1	1	1				
34	1	26106-060402	BOLT, M6X 40 PLATED	1	1	1	1				
35	1	26106-080162	BOLT, M8X 16 PLATED	2	2	2	2				
36	1	26106-080162	BOLT, M8X 16 PLATED	2	2	2	2				
37	1	26106-080202	BOLT, M8X 20 PLATED	4	4	4	4				
38	1	26106-080252	BOLT, M8X 25 PLATED	2	2	2	2				
39	1	26106-080252	BOLT, M8X 25 PLATED	1	1	1	1				
40	1	26106-080752	BOLT, M8X 75 PLATED	3	3	3	3				
41	1	26106-080752	BOLT, M8X 75 PLATED	1	1	1	1				
42	1	26106-100202	BOLT, M10X 20 PLATED	1	1	1	1				
42-1	1	26106-060202	BOLT, M6X 20 PLATED	1	1	1	1			S	
	(A=F090102)	(B=F080101)	(C=F070102) (D=F060101)								
43	1	26306-100002	NUT, M10	1	1	1	1				

N:Old $\xleftrightarrow[\text{No}]{\text{Yes}}$ New, Q:Old $\xleftrightarrow[\text{Yes}]{\text{No}}$ New, R:Old $\xleftrightarrow[\text{Yes}]{\text{Yes}}$ New, S:Old $\xleftrightarrow[\text{No}]{\text{No}}$ New, W:Add, Z:Discontinued, F:Interchangeable by set, K:Q'ty Change

++ CONTINUE ++

Copyright (C) 2014 YANMAR CO., LTD. All RightsReserved.

Fig.211. AIR CONDITIONER(2)

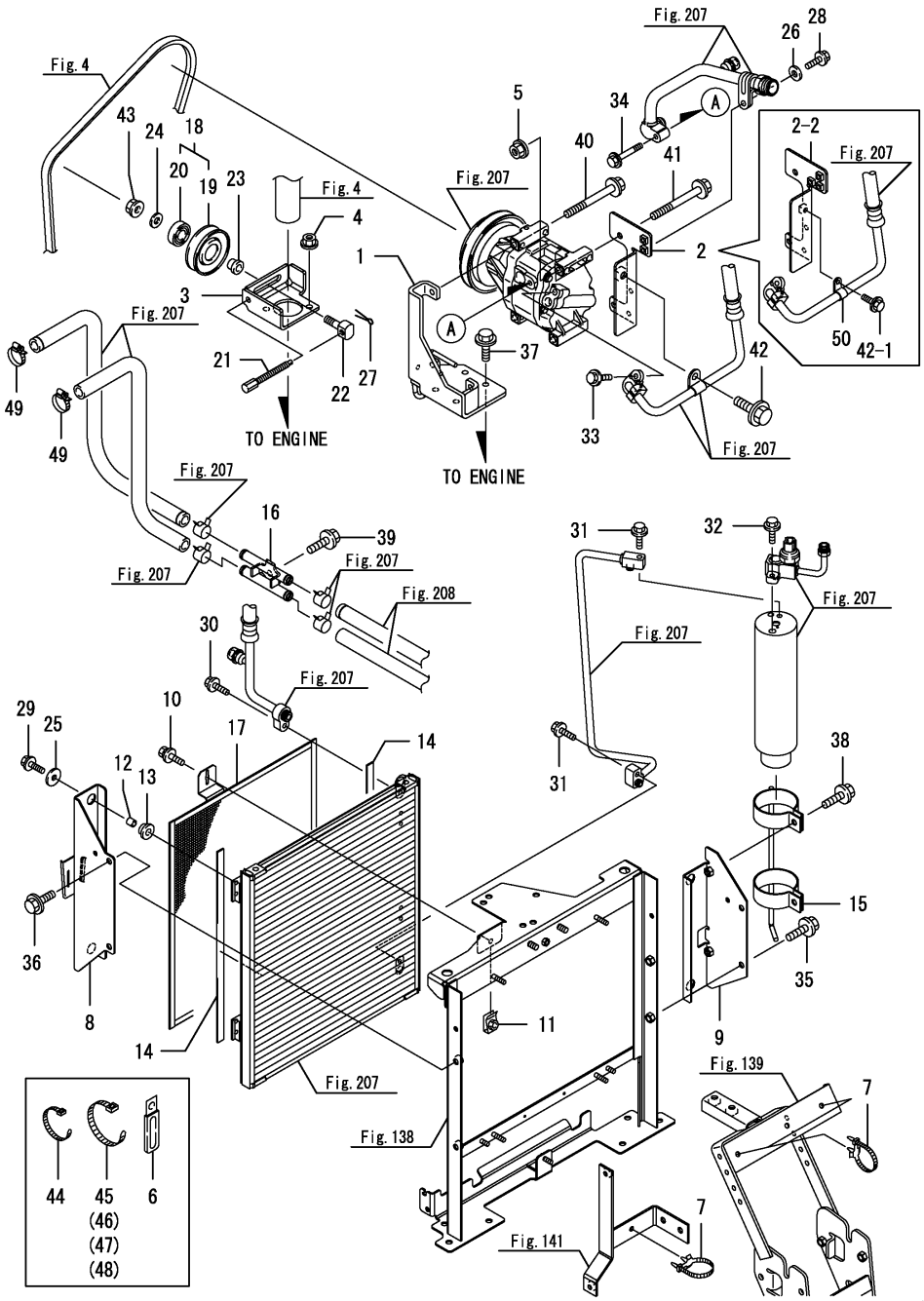

(A)=EG326Y (D)=EG334Y
(B)=EG328Y (E)=
(C)=EG330Y (F)=

No.	Lev.	Parts No.	Description	Q'ty (A)	(B)	(C)	(D)	(E)	(F)	I	R
44	1	29622-140001	BAND, RF140	1	1	1	1				
45	1	29622-250001	BAND, RF250	1	1	1	1				
46	1	29622-250001	BAND, RF250	1	1	1	1				
47	1	29622-250001	BAND, RF250	1	1	1	1				
48	1	29622-250001	BAND, RF250	1	1	1	1			W	
	(A=F090716)	(B=F080596)	(C=F071704) (D=F061533)								
49	1	23000-019000	CLAMP, 19	2	2	2	2			W	
	(A=F090352)	(B=F080308)	(C=F070762) (D=F060684)								
50	1	1A7805-04170	CLIP 12	1	1	1	1			W	
	(A=F090102)	(B=F080101)	(C=F070102) (D=F060101)								

N:Old ←Yes/No→ New, Q:Old ←No/Yes→ New, R:Old ←Yes/Yes→ New, S:Old ←No/No→ New, W:Add, Z:Discontinued, F:Interchangeable by set, K:Q'ty Change

Copyright (C) 2014 YANMAR CO., LTD. All RightsReserved.

Fig.212. AIR CONDITIONER DUCT

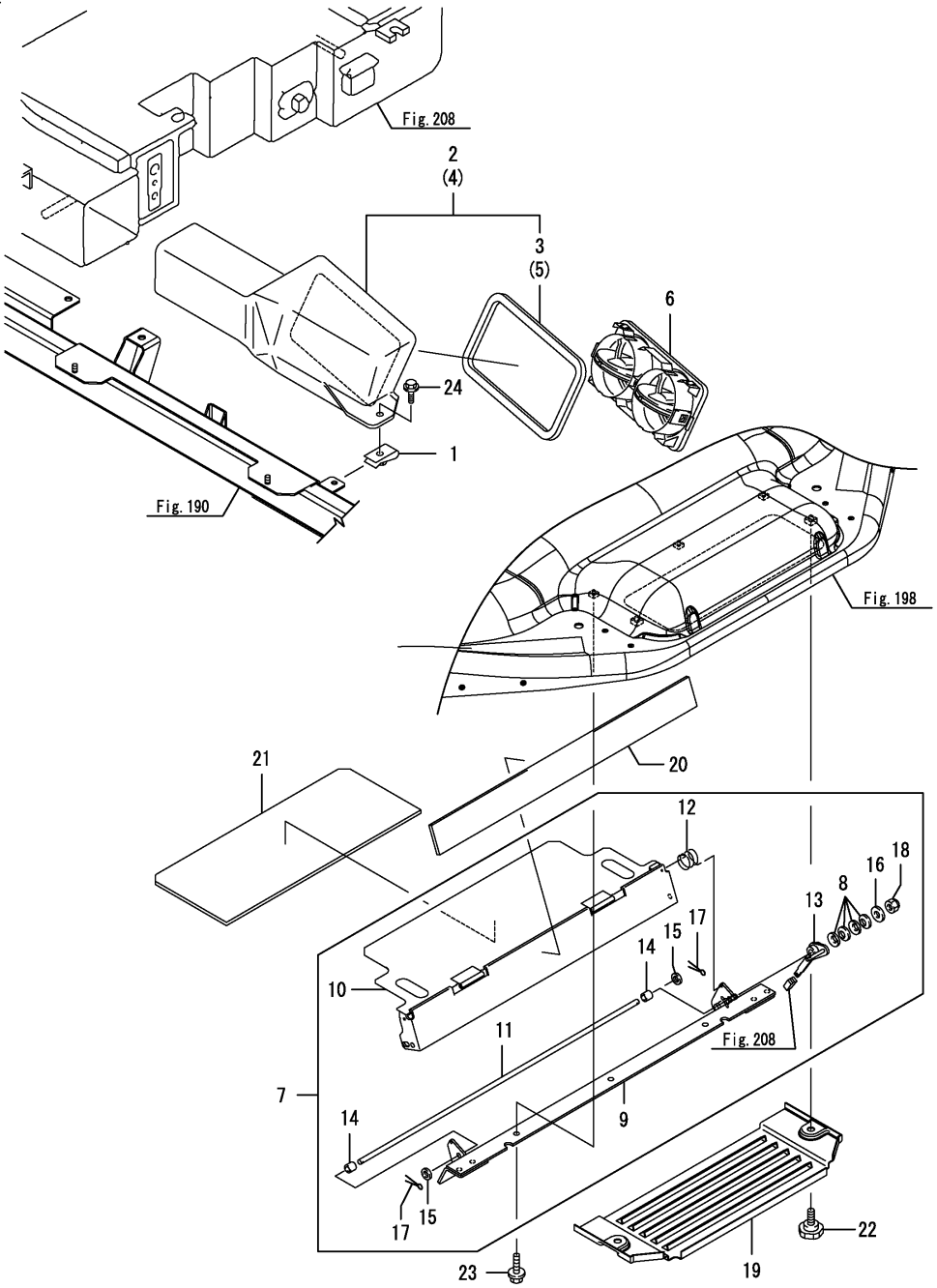

(A)=EG326Y (D)=EG334Y
(B)=EG328Y (E)=
(C)=EG330Y (F)=

No.	Lev.	Parts No.	Description	Q'ty (A)	(B)	(C)	(D)	(E)	(F)	I	R
1	1	198071-61890	NUT, SPEED M6	2	2	2	2				
2	1	1A7030-87380	DUCT ASSY, SIDE L	1	1	1	1				
3	2	1A7030-87320	SEAL, DUCT SIDE	1	1	1	1				
4	1	1A7030-87390	DUCT ASSY, SIDE R	1	1	1	1				
5	2	1A7030-87320	SEAL, DUCT SIDE	1	1	1	1				
6	1	1A7030-87411	GRILLE ASSY	2	2	2	2				
7	1	1A7030-87500	SHUTTER	1	1	1	1				
8	2	197830-84770	WASHER, H6	4	4	4	4				
9	2	1A7030-87510	BRACKET ASSY	1	1	1	1				
10	2	1A7030-87560	SHUTTER ASSY	1	1	1	1				
11	2	1A7030-87590	SHAFT	1	1	1	1				
12	2	1A7030-87660	SPRING, TORSION 2.0	1	1	1	1				
13	2	1A7030-87670	LEVER ASSY	1	1	1	1				
14	2	1A7030-87680	COLLAR, 6.5X10	2	2	2	2				
15	2	22137-060000	WASHER, 6	2	2	2	2				
16	2	22157-060000	WASHER, 6	1	1	1	1				
17	2	22417-160160	PIN, COTTER 1.6X16	2	2	2	2				
18	2	26346-060002	NUT, M6	1	1	1	1				
19	1	1A7030-87650	COVER, FILTER	1	1	1	1				
20	1	1A7030-87860	URETHANE, FRESH AIR	1	1	1	1				
20-1	1	1A7210-87890	PAD,	1	1	1	1			N	
	(A=F090716)	(B=F080596)	(C=F071704) (D=F061533)								
21	1	1A7030-87870	URETHANE, SHYNESS	1	1	1	1				
22	1	26062-080201	BOLT, 8X 20	2	2	2	2				
23	1	26106-060122	BOLT, M6X 12 PLATED	3	3	3	3				
24	1	26106-060162	BOLT, M6X 16 PLATED	2	2	2	2				

N:Old $\xleftarrow[\text{No}]{\text{Yes}}$ New, Q:Old $\xleftarrow[\text{Yes}]{\text{No}}$ New, R:Old $\xleftarrow[\text{Yes}]{\text{Yes}}$ New, S:Old $\xleftarrow[\text{No}]{\text{No}}$ New, W:Add, Z:Discontinued, F:Interchangeable by set, K:Q'ty Change

Copyright (C) 2014 YANMAR CO., LTD. All RightsReserved.

Fig.213. SAFETY FRAME

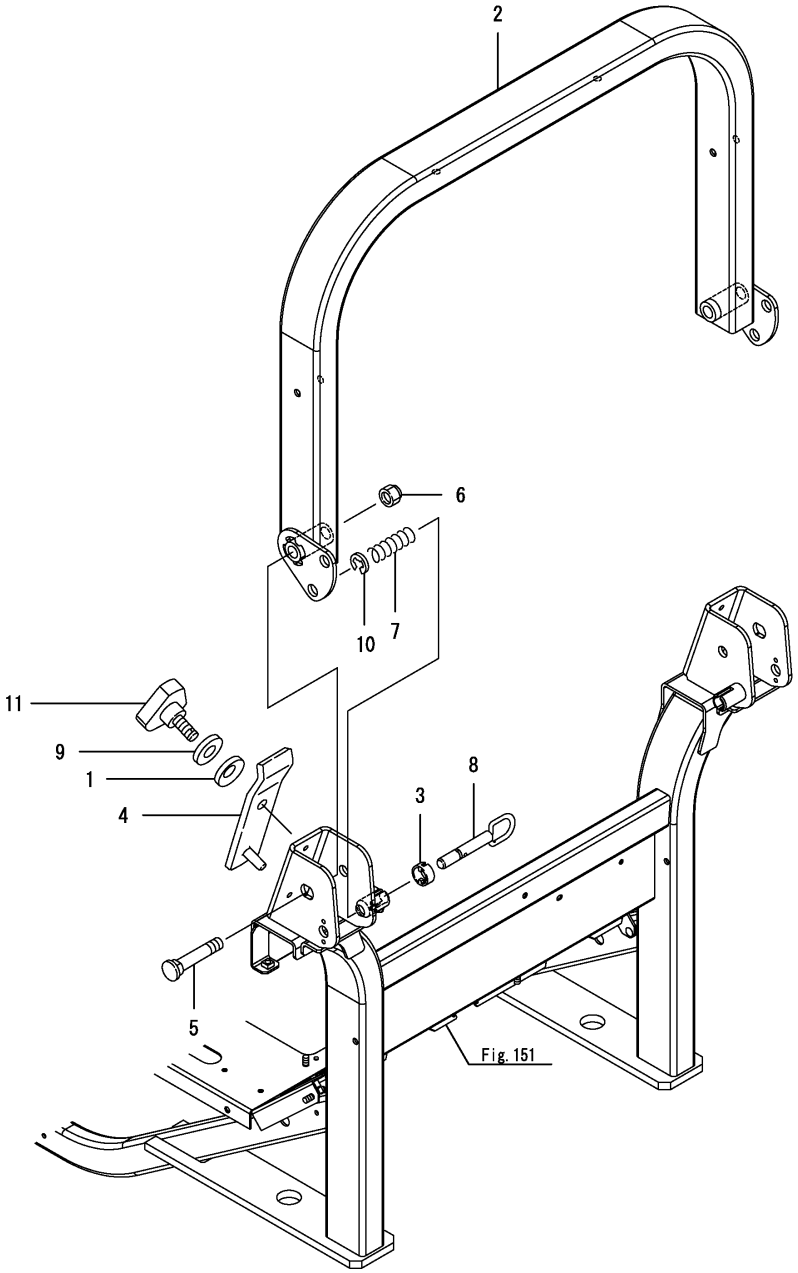

(A)=EG326Y (B)=EG328Y (C)=EG330Y (D)=EG334Y (E)= (F)=

No.	Lev.	Parts No.	Description	Q'ty (A)	(B)	(C)	(D)	(E)	(F)	I	R
1	1	194740-00160	SPRING, 10	2	2	2	2				
2	1	1A7190-85090	FRAME ASSY, UPPER M	1	1	1	1				
3	1	198121-85150	SEAT, PIN	2	2	2	2				
4	1	198121-85320	PLATE ASSY, PRESSURE	2	2	2	2				
5	1	198101-85411	PIN, 16	2	2	2	2				
6	1	1A7260-85510	NUT, M16	2	2	2	2				
7	1	198101-85541	SPRING	2	2	2	2				
8	1	198101-85581	PIN, HOLD	2	2	2	2				
9	1	22137-100000	WASHER, 10	2	2	2	2				
10	1	22272-000120	RING, E-12	2	2	2	2				
11	1	26062-100251	BOLT, 10X 25	2	2	2	2				

N:Old $\overset{\text{Yes}}{\underset{\text{No}}{\leftrightarrow}}$ New, Q:Old $\overset{\text{No}}{\underset{\text{Yes}}{\leftrightarrow}}$ New, R:Old $\overset{\text{Yes}}{\underset{\text{Yes}}{\leftrightarrow}}$ New, S:Old $\overset{\text{No}}{\underset{\text{No}}{\leftrightarrow}}$ New, W:Add, Z:Discontinued, F:Interchangeable by set, K:Q'ty Change

Copyright (C) 2014 YANMAR CO., LTD. All RightsReserved.

Fig.214. SAFETY FRAME(HIGH SPEED)

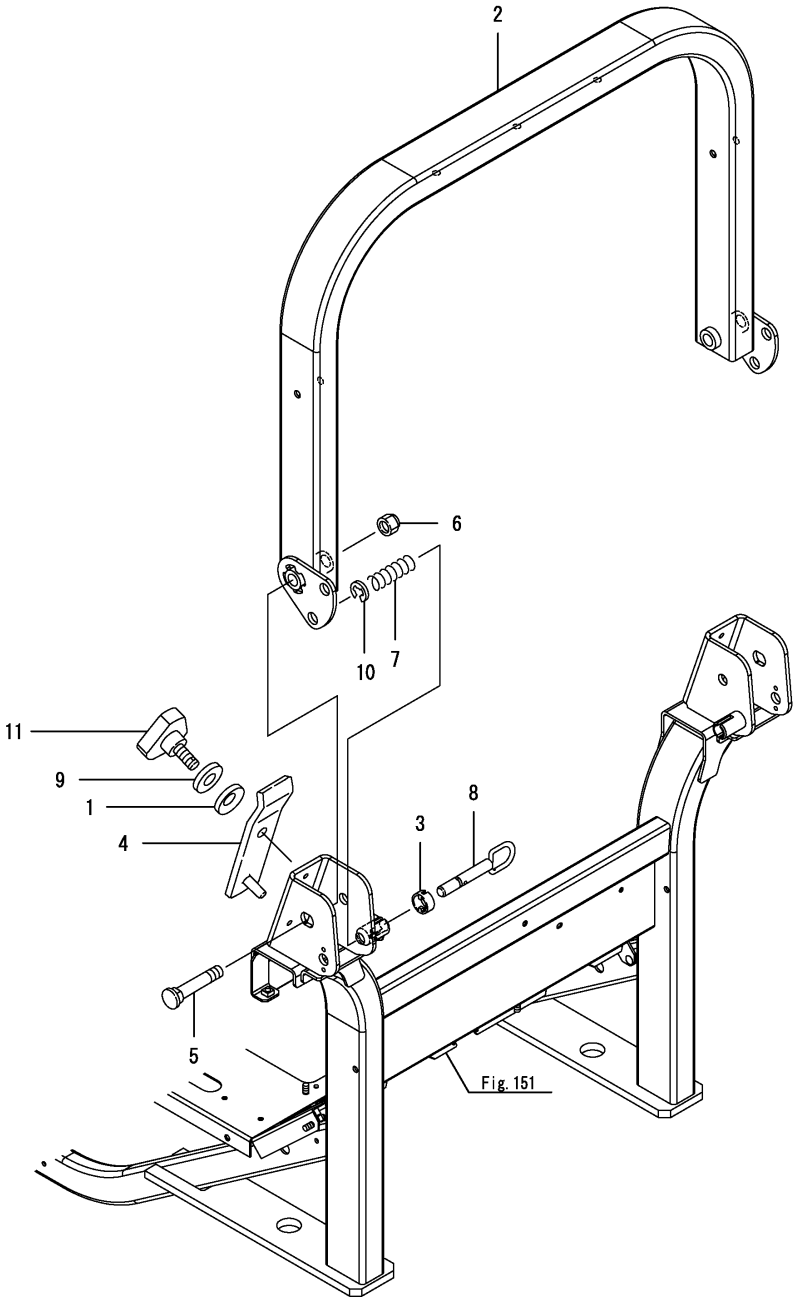

(A)=EG326Y (D)=EG334Y
(B)=EG328Y (E)=
(C)=EG330Y (F)=

No.	Lev.	Parts No.	Description	Q'ty (A)	(B)	(C)	(D)	(E)	(F)	I	R
1	1	194740-00160	SPRING, 10	2	2	2	2				
2	1	1A7150-85090	FRAME ASSY, UPPER M	1	1	1	1				
3	1	198121-85150	SEAT, PIN	2	2	2	2				
4	1	198121-85320	PLATE ASSY, PRESSURE	2	2	2	2				
5	1	198101-85411	PIN, 16	2	2	2	2				
6	1	1A7260-85510	NUT, M16	2	2	2	2				
7	1	198101-85541	SPRING	2	2	2	2				
8	1	198101-85581	PIN, HOLD	2	2	2	2				
9	1	22137-100000	WASHER, 10	2	2	2	2				
10	1	22272-000120	RING, E-12	2	2	2	2				
11	1	26062-100251	BOLT, 10X 25	2	2	2	2				

N:Old $\frac{\text{Yes}}{\text{No}}$ New, Q:Old $\frac{\text{No}}{\text{Yes}}$ New, R:Old $\frac{\text{Yes}}{\text{Yes}}$ New, S:Old $\frac{\text{No}}{\text{No}}$ New, W:Add, Z:Discontinued, F:Interchangeable by set, K:Q'ty Change

Copyright (C) 2014 YANMAR CO., LTD. All RightsReserved.

Fig.271. SAFETY FRAME(A,K,KW,KWA)

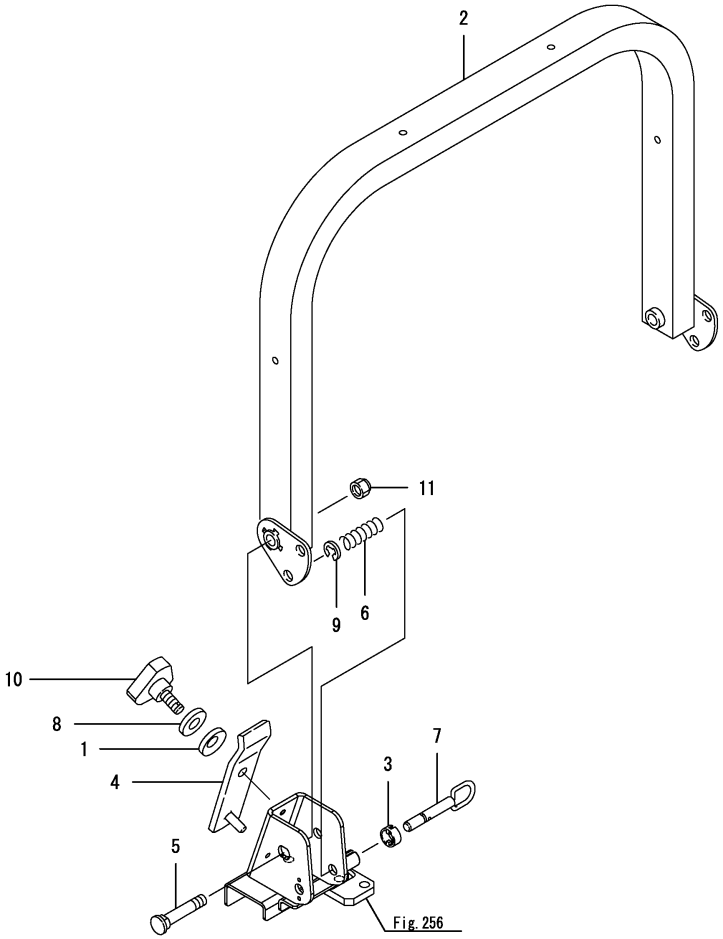

(A)=EG326Y
(B)=EG328Y
(C)=EG330Y
(D)=EG334Y
(E)=
(F)=

No.	Lev.	Parts No.	Description	Q'ty (A)	(B)	(C)	(D)	(E)	(F)	I	R
1	1	194740-00160	SPRING, 10			2	2				
2	1	1A7160-85090	FRAME M ASSY, UPPER			1	1				
3	1	198121-85150	SEAT, PIN			2	2				
4	1	198121-85320	PLATE ASSY, PRESSURE			2	2				
5	1	198101-85411	PIN, 16			2	2				
6	1	198101-85541	SPRING			2	2				
7	1	198101-85581	PIN, HOLD			2	2				
8	1	22137-100000	WASHER, 10			2	2				
9	1	22272-000120	RING, E-12			2	2				
10	1	26062-100251	BOLT, 10X 25			2	2				
11	1	26356-160002	NUT, M16			2	2				

Remarks
* Applied to the following models.
(Rops specification)EG330A, EG330K, EG330KW, EG334A, EG334KW, EG334KWA

N:Old $\frac{\text{Yes}}{\text{No}}$ New, Q:Old $\frac{\text{No}}{\text{Yes}}$ New, R:Old $\frac{\text{Yes}}{\text{Yes}}$ New, S:Old $\frac{\text{No}}{\text{No}}$ New, W:Add, Z:Discontinued, F:Interchangeable by set, K:Q'ty Change

Copyright (C) 2014 YANMAR CO., LTD. All RightsReserved.

Fig.215. DOCUMENT

(A)=EG326Y (D)=EG334Y
(B)=EG328Y (E)=
(C)=EG330Y (F)=

No.	Lev.	Parts No.	Description	Q'ty (A)	(B)	(C)	(D)	(E)	(F)	I	R
1	1	1A7140-95950	OPERATION GUIDE	1	1	1	1				
2	1	0A041-J00800	OPERATION MANUAL	1	1	1	1				
2-4	1	0A041-J00804	OPERATION MANUAL	1	1	1	1			N	
	(A=F090706)	(B=F080594)	(C=F070860) (D=F061080)								
2-9	1	0A041-J00809	OPERATION MANUAL	1	1	1	1			N	
	(A=F100058)	(B=F200051)	(C=F300165) (D=F400203)								
2-10	1	0A041-JA0030	OPERATION MANUAL	1	1	1	1			N	
	(A=F100094)	(B=F200070)	(C=F300261) (D=F400262)								
2-11	1	0A041-JA0031	OPERATION MANUAL	1	1	1	1			S	
	(A=F100119)	(B=F200101)	(C=F300396) (D=F400417)								

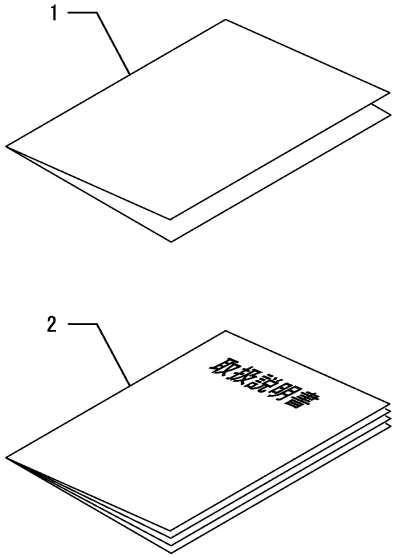

N:Old $\xleftarrow[\text{No}]{\text{Yes}}$ New, Q:Old $\xleftarrow[\text{Yes}]{\text{No}}$ New, R:Old $\xleftarrow[\text{Yes}]{\text{Yes}}$ New, S:Old $\xleftarrow[\text{No}]{\text{No}}$ New, W:Add, Z:Discontinued, F:Interchangeable by set, K:Q'ty Change

Copyright (C) 2014 YANMAR CO., LTD. All RightsReserved.

Fig.306. DOCUMENT(SIMPLE)

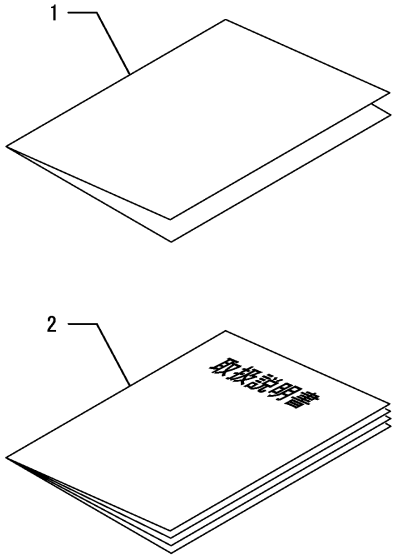

(A)=EG326Y (D)=EG334Y
(B)=EG328Y (E)=
(C)=EG330Y (F)=

No.	Lev.	Parts No.	Description	Q'ty (A)	(B)	(C)	(D)	(E)	(F)	I	R
1	1	1A7140-95950	OPERATION GUIDE				1				
2	1	0A041-JA0150	OPERATION MANUAL				1				

N:Old $\xleftarrow[\text{No}]{\text{Yes}}$ New, Q:Old $\xleftarrow[\text{Yes}]{\text{No}}$ New, R:Old $\xleftarrow[\text{Yes}]{\text{Yes}}$ New, S:Old $\xleftarrow[\text{No}]{\text{No}}$ New, W:Add, Z:Discontinued, F:Interchangeable by set, K:Q'ty Change

Copyright (C) 2014 YANMAR CO., LTD. All RightsReserved.

Fig.216. REARVIEW MIRROR(LEFT)

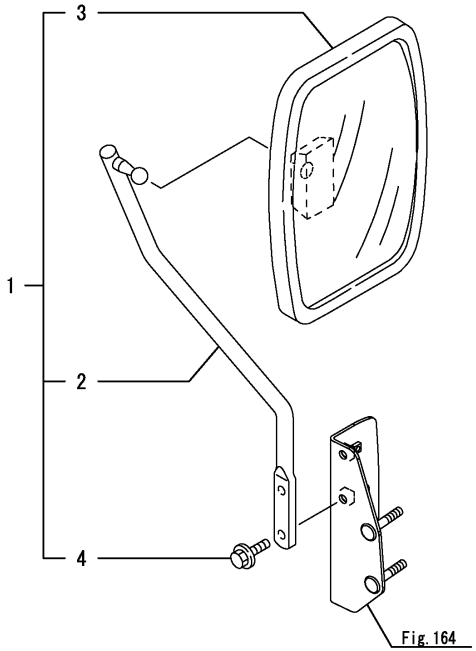

(A)=EG326Y (D)=EG334Y
(B)=EG328Y (E)=
(C)=EG330Y (F)=

No.	Lev.	Parts No.	Description	Q'ty (A)	(B)	(C)	(D)	(E)	(F)	I	R
1	1	1A7140-64200	MIRROR KIT, BACK L	1	1	1	1				
2	2	1A7260-64080	ROD ASSY, STAY	1	1	1	1				
3	2	198440-64100	HEAD, MIRROR	1	1	1	1				
4	2	198093-82510	BOLT, M8X25	2	2	2	2				

N:Old $\xleftrightarrow[\text{No}]{\text{Yes}}$ New, Q:Old $\xleftrightarrow[\text{Yes}]{\text{No}}$ New, R:Old $\xleftrightarrow[\text{Yes}]{\text{Yes}}$ New, S:Old $\xleftrightarrow[\text{No}]{\text{No}}$ New, W:Add, Z:Discontinued, F:Interchangeable by set, K:Q'ty Change

Copyright (C) 2014 YANMAR CO., LTD. All RightsReserved.

Fig.272. REARVIEW MIRROR(LEFT)(A,K,KW)

(A)=EG326Y
(B)=EG328Y
(C)=EG330Y
(D)=EG334Y
(E)=
(F)=

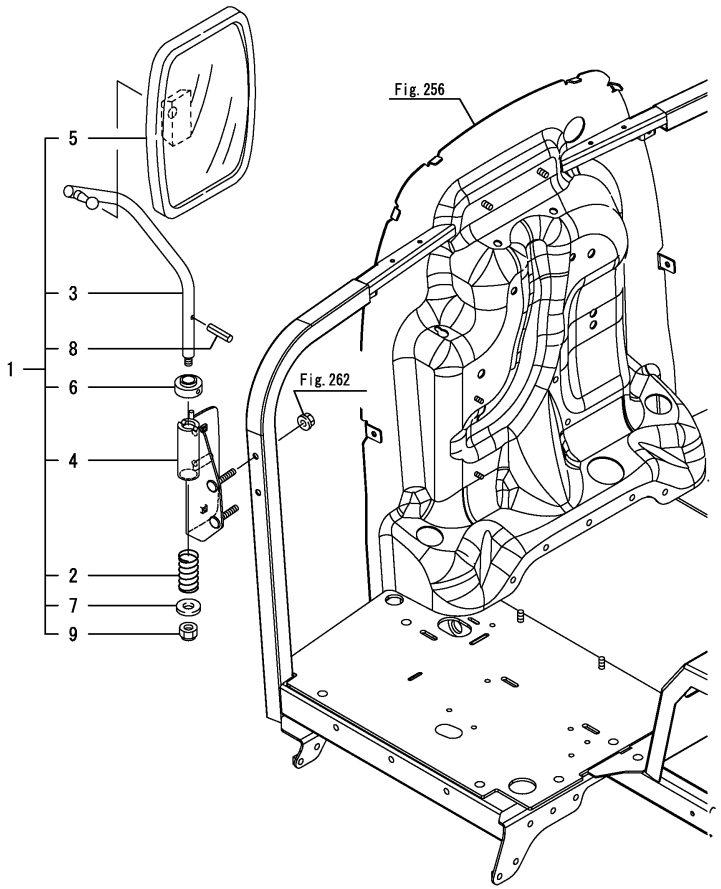

No.	Lev.	Parts No.	Description	Q'ty (A)	(B)	(C)	(D)	(E)	(F)	I	R
1	1	1A7160-64200	MIRROR KIT, L.H.			1	1				
2	2	198220-63340	SPRING, FRICTION			1	1				
3	2	1A7260-63841	STAY, BACK MIRROR L			1	1				
4	2	1A7601-63860	BRACKET ASSY, LAMP L			1	1				
5	2	198440-64100	HEAD, MIRROR			1	1				
6	2	198133-64400	GROMMET			1	1				
7	2	22137-120000	WASHER, 12			1	1				
8	2	22351-060036	PIN, SPRING 6.0X36			1	1				
9	2	26346-100002	NUT, M10			1	1				

Remarks
* Applied to the following models.
(Rops specification)EG330A, EG330K, EG330KW, EG334A, EG334KW

N:Old $\overset{\text{Yes}}{\underset{\text{No}}{\leftrightarrow}}$ New, Q:Old $\overset{\text{No}}{\underset{\text{Yes}}{\leftrightarrow}}$ New, R:Old $\overset{\text{Yes}}{\underset{\text{Yes}}{\leftrightarrow}}$ New, S:Old $\overset{\text{No}}{\underset{\text{No}}{\leftrightarrow}}$ New, W:Add, Z:Discontinued, F:Interchangeable by set, K:Q'ty Change

Copyright (C) 2014 YANMAR CO., LTD. All RightsReserved.

Fig.217. CANOPY

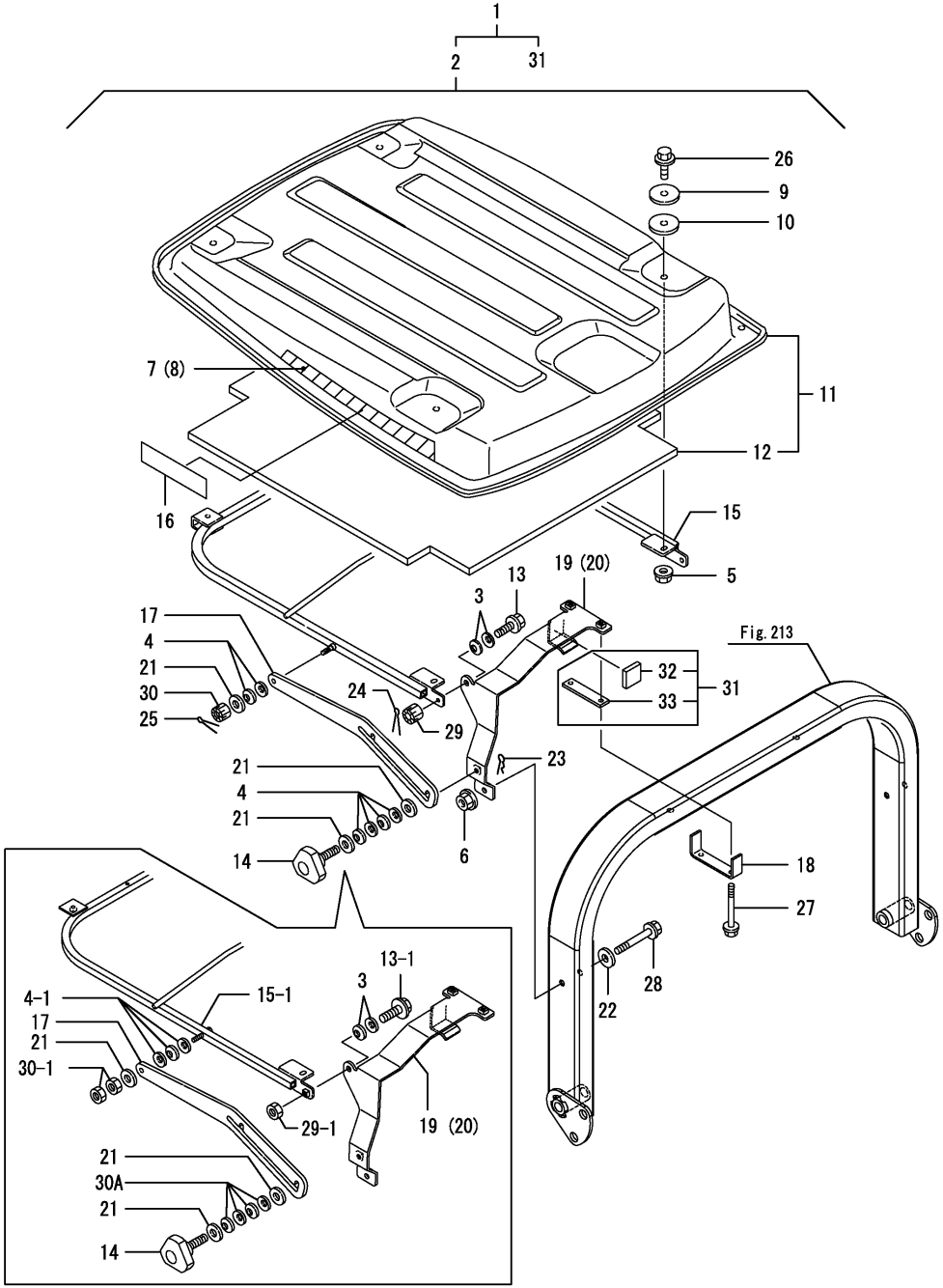

(A)=EG326Y (D)=EG334Y
(B)=EG328Y (E)=
(C)=EG330Y (F)=

No.	Lev.	Parts No.	Description	Q'ty (A)	(B)	(C)	(D)	(E)	(F)	I	R
1	1	198200-85602	CANOPY KIT	1	1	1	1				
1-1	1	198200-85603	CANOPY KIT,	1	1	1	1			N	
	(A=*2011.02)	(B=*2011.02)	(C=*2011.02) (D=*2011.02)								
2	2	198103-85600	CANOPY KIT,ST33BTNTH	1	1	1	1				
2-1	2	198103-85601	CANOPY KIT,	1	1	1	1			S	
	(A=*2011.02)	(B=*2011.02)	(C=*2011.02) (D=*2011.02)								
3	3	194740-00160	SPRING, 10	4	4	4	4				
4	3	194740-00160	SPRING, 10	12	12	12	12				
4-1	3	194740-00160	SPRING, 10	6	6	6	6			K	
	(A=F090108)	(B=F080594)	(C=F070860) (D=F060435)								
5	3	194990-22140	NUT, M8	2	2	2	2				
6	3	194990-22150	NUT, M10	2	2	2	2				
7	3	198010-65850	MARK L,CANOPY SIDE	1	1	1	1				
8	3	198010-65860	MARK R,CANOPY SIDE	1	1	1	1				
9	3	198255-82640	STAY, PLATE	4	4	4	4				
10	3	198255-82660	RUBBER, CUSHION B	4	4	4	4				
11	3	198071-85501	ROOF ASSY	1	1	1	1				
12	4	198071-85820	TRIM, ROOF	1	1	1	1				
13	3	198101-85620	BOLT, ROOF	2	2	2	2				
13-1	3	26106-100302	BOLT, M10X 30 PLATED	2	2	2	2			S	
	(A=*2011.02)	(B=*2011.02)	(C=*2011.02) (D=*2011.02)								
14	3	198101-85690	BOLT, M10X35	2	2	2	2				
15	3	198101-85701	FRAME ASSY, ROOF	1	1	1	1				
15-1	3	198101-85702	FRAME ASSY, ROOF	1	1	1	1			S	
	(A=*2011.02)	(B=*2011.02)	(C=*2011.02) (D=*2011.02)								
16	3	198103-85850	NAMEPLATE,ROOF	2	2	2	2				
17	3	198103-85860	PLATE, LINK	2	2	2	2				
18	3	198101-85940	SUPPORT, A	2	2	2	2				
19	3	198101-85961	STAY, ROOF L	1	1	1	1				
20	3	198101-85971	STAY, ROOF R	1	1	1	1				
21	3	22137-100000	WASHER, 10	6	6	6	6				
22	3	22157-100000	WASHER, 10	2	2	2	2				
23	3	22372-080000	PIN, SNAP 8	2	2	2	2				
24	3	22417-200200	PIN, COTTER 2.0X20	2	2	2	2			Z	
	(A=*2011.02)	(B=*2011.02)	(C=*2011.02) (D=*2011.02)								
25	3	22417-200200	PIN, COTTER 2.0X20	2	2	2	2			Z	
	(A=*2011.02)	(B=*2011.02)	(C=*2011.02) (D=*2011.02)								
26	3	26106-080202	BOLT, M8X 20 PLATED	4	4	4	4				
27	3	26106-080602	BOLT, M8X 60 PLATED	4	4	4	4				
28	3	26106-100652	BOLT, M10X 65 PLATED	2	2	2	2				
29	3	26837-100002	NUT, CASTLE M10	2	2	2	2				
29-1	3	26716-100002	NUT, M10	2	2	2	2			S	
	(A=*2011.02)	(B=*2011.02)	(C=*2011.02) (D=*2011.02)								
30	3	26837-100002	NUT, CASTLE M10	2	2	2	2				
30-1	3	26716-100002	NUT, M10	4	4	4	4			S	
	(A=*2011.02)	(B=*2011.02)	(C=*2011.02) (D=*2011.02)								
30A	3	194740-00160	SPRING, 10	8	8	8	8			W	
	(A=F090108)	(B=F080594)	(C=F070860) (D=F060435)								
31	2	198200-85900	ATTACHING KIT	1	1	1	1				
32	3	198200-85920	PLATE, RUBBER	2	2	2	2				
33	3	198200-85930	PLATE, SUPPORT A	2	2	2	2				

N:Old $\overset{\text{Yes}}{\underset{\text{No}}{\leftrightarrow}}$ New, Q:Old $\overset{\text{No}}{\underset{\text{Yes}}{\leftrightarrow}}$ New, R:Old $\overset{\text{Yes}}{\underset{\text{Yes}}{\leftrightarrow}}$ New, S:Old $\overset{\text{No}}{\underset{\text{No}}{\leftrightarrow}}$ New, W:Add, Z:Discontinued, F:Interchangeable by set, K:Q'ty Change

Copyright (C) 2014 YANMAR CO., LTD. All RightsReserved.

Fig.218. WORK LAMP

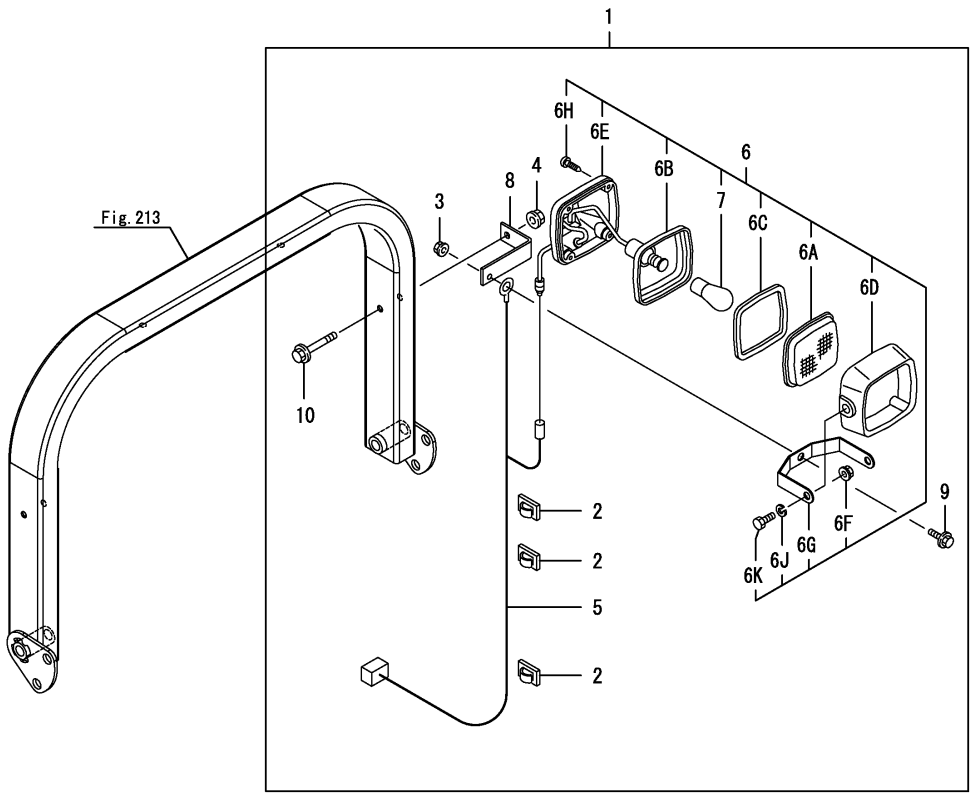

(A)=EG326Y (D)=EG334Y
(B)=EG328Y (E)=
(C)=EG330Y (F)=

No.	Lev.	Parts No.	Description	Q'ty (A)	(B)	(C)	(D)	(E)	(F)	I	R
1	1	198071-54012	LAMP KIT, WORKING	1	1	1	1				
2	2	172010-07810	STICKER, WIRE	3	3	3	3				
3	2	194990-22140	NUT, M8	1	1	1	1				
4	2	194990-22150	NUT, M10	1	1	1	1				
5	2	198071-51271	WIRE, WORK LAMP	1	1	1	1				
6	2	194640-54100	LAMP ASSY, WORKING	1	1	1	1				
6A	3	194640-54110	LENS	1	1	1	1				
6B	3	194640-54120	REFLECTOR ASSY	1	1	1	1				
6C	3	194640-54130	GASKET	1	1	1	1				
6D	3	194640-54140	RIM	1	1	1	1				
6E	3	194640-54150	HOUSING ASSY	1	1	1	1				
6F	3	194640-54160	NUT	2	2	2	2				
6G	3	194640-54180	STAY	1	1	1	1				
6H	3	194640-54190	SCREW, TAPPING M4X20	4	4	4	4				
6J	3	22217-060000	WASHER, SPRING 6	2	2	2	2				
6K	3	26116-060162	BOLT, M6X 16 PLATED	2	2	2	2				
7	3	194640-54170	BULB, 12V/18.4W	1	1	1	1				
8	2	198071-85420	STAY, WORK LAMP	1	1	1	1				
9	2	26106-080202	BOLT, M8X 20 PLATED	1	1	1	1				
10	2	26106-100702	BOLT, M10X 70 PLATED	1	1	1	1				

N:Old $\xleftrightarrow[\text{No}]{\text{Yes}}$ New, Q:Old $\xleftrightarrow[\text{Yes}]{\text{No}}$ New, R:Old $\xleftrightarrow[\text{Yes}]{\text{Yes}}$ New, S:Old $\xleftrightarrow[\text{No}]{\text{No}}$ New, W:Add, Z:Discontinued, F:Interchangeable by set, K:Q'ty Change

Copyright (C) 2014 YANMAR CO., LTD. All RightsReserved.

Fig.219. REPAIR PARTS(COMPRESSOR)

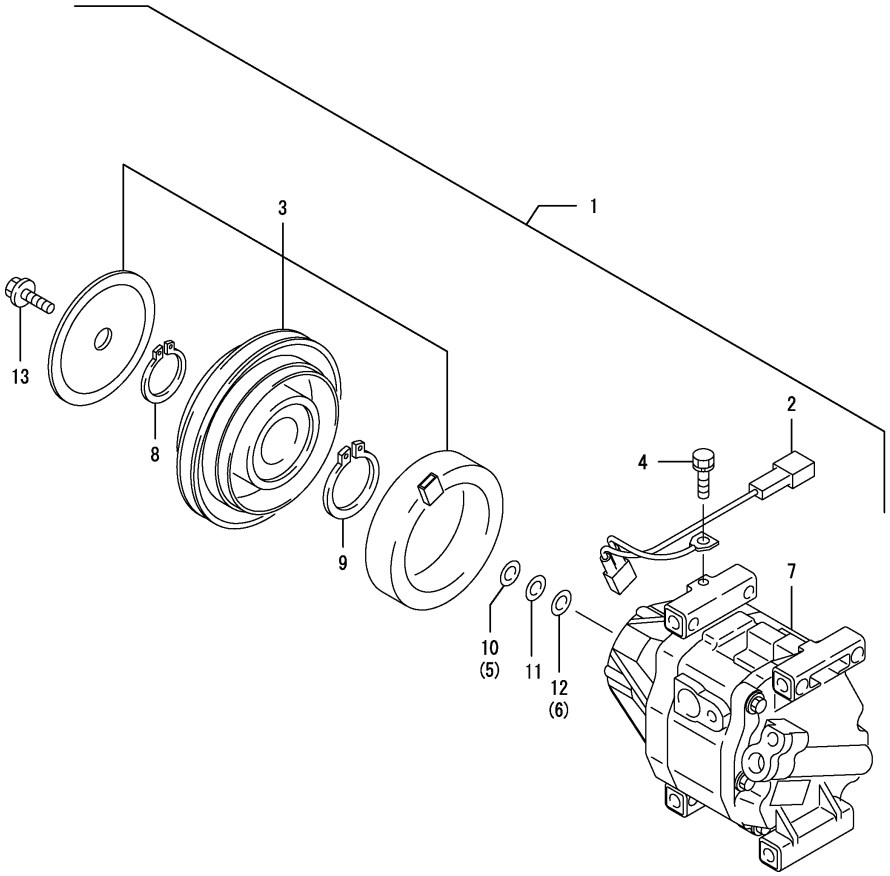

(A)=EG326Y (D)=EG334Y
(B)=EG328Y (E)=
(C)=EG330Y (F)=

No.	Lev.	Parts No.	Description	Q'ty (A)	(B)	(C)	(D)	(E)	(F)	I	R
1	1	1A7320-89902	COMPRESSOR ASSY	1	1	1	1				
1-1	1	1A7471-89900	COMPRESSOR ASSY, S	1	1	1	1			N	
	(A=F090404)	(B=F080327)	(C=F070822) (D=F060757)								
2	2	1A7030-87911	HARNESS, WIRE	1	1	1	1				
3	2	1A7320-87922	CLUTCH ASSY, MAGNET	1	1	1	1				
3-1	2	1A7471-87920	CLUTCH ASSY, MAGNET	1	1	1	1			N	
	(A=F090404)	(B=F080327)	(C=F070822) (D=F060757)								
4	2	1A7320-87990	BOLT, M5X8	1	1	1	1				
5	2	1A7030-89860	WASHER, 0.6	1	1	1	1				
6	2	1A7030-89870	WASHER, 1.0	1	1	1	1				
7	2	1A7320-89892	COMPRESSOR	1	1	1	1				
8	2	1A7030-89930	RING, SNAP	1	1	1	1				
9	2	1A7030-89940	RING, SNAP	1	1	1	1				
10	2	1A7030-89950	WASHER, 0.1	1	1	1	1				
11	2	1A7030-89960	WASHER, 0.15	1	1	1	1				
12	2	1A7030-89970	WASHER, 0.4	1	1	1	1				
13	2	1A7030-89980	BOLT, M6X16	1	1	1	1				

Remarks
* Spare parts.

N:Old $\xleftrightarrow[\text{No}]{\text{Yes}}$ New, Q:Old $\xleftrightarrow[\text{Yes}]{\text{No}}$ New, R:Old $\xleftrightarrow[\text{Yes}]{\text{Yes}}$ New, S:Old $\xleftrightarrow[\text{No}]{\text{No}}$ New, W:Add, Z:Discontinued, F:Interchangeable by set, K:Q'ty Change

Copyright (C) 2014 YANMAR CO., LTD. All RightsReserved.

Fig.220. DRAWBAR HITCH

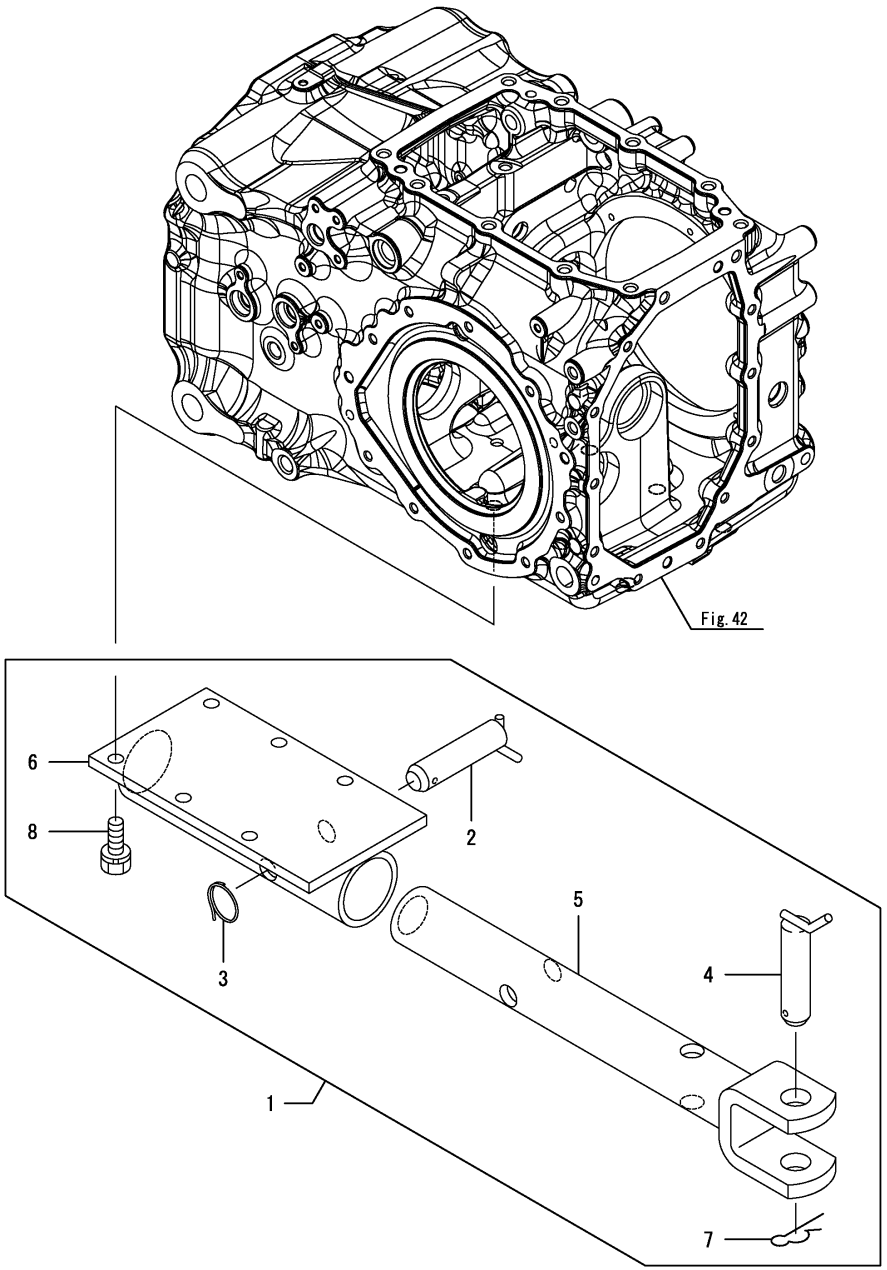

(A)=EG326Y (D)=EG334Y
(B)=EG328Y (E)=
(C)=EG330Y (F)=

No.	Lev.	Parts No.	Description	Q'ty (A)	(B)	(C)	(D)	(E)	(F)	I	R
1	1	1A7140-75700	HITCH KIT, DRAWBAR	1	1	1	1				
2	2	194145-75240	PIN, HITCH 22	1	1	1	1				
3	2	194145-75250	RING, STOPPER	1	1	1	1				
4	2	194130-75430	PIN, HITCH 28X98	1	1	1	1				
5	2	198091-75710-1	HITCH, DRAWBAR	1	1	1	1				
6	2	1A7140-75750	BRACKET ASSY	1	1	1	1				
6-1	2	1A7140-75751	BRACKET ASSY,DRAWBAR (D=F060785)				1				R
7	2	194080-75790	PIN, SNAP 28	1	1	1	1				
8	2	26013-140352	BOLT, M14X 35	6	6	6	6				

N:Old ◄Yes/No► New, Q:Old ◄No/Yes► New, R:Old ◄Yes/Yes► New, S:Old ◄No/No► New, W:Add, Z:Discontinued, F:Interchangeable by set, K:Q'ty Change

Copyright (C) 2014 YANMAR CO., LTD. All RightsReserved.

Fig.221. POWER SUPPLY

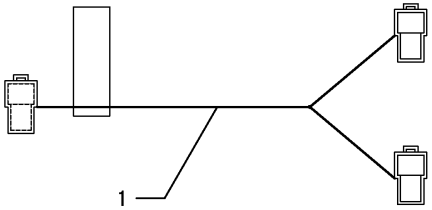

(A)=EG326Y
(B)=EG328Y
(C)=EG330Y
(D)=EG334Y
(E)=
(F)=

No.	Lev.	Parts No.	Description	Q'ty (A)	(B)	(C)	(D)	(E)	(F)	I	R
1	1	1A7140-59990	HARNESS, WIRE	1	1	1	1				

N:Old ◄Yes/No► New, Q:Old ◄No/Yes► New, R:Old ◄Yes/Yes► New, S:Old ◄No/No► New, W:Add, Z:Discontinued, F:Interchangeable by set, K:Q'ty Change

Copyright (C) 2014 YANMAR CO., LTD. All RightsReserved.

Fig.273. WEIGHT LOCK PIN

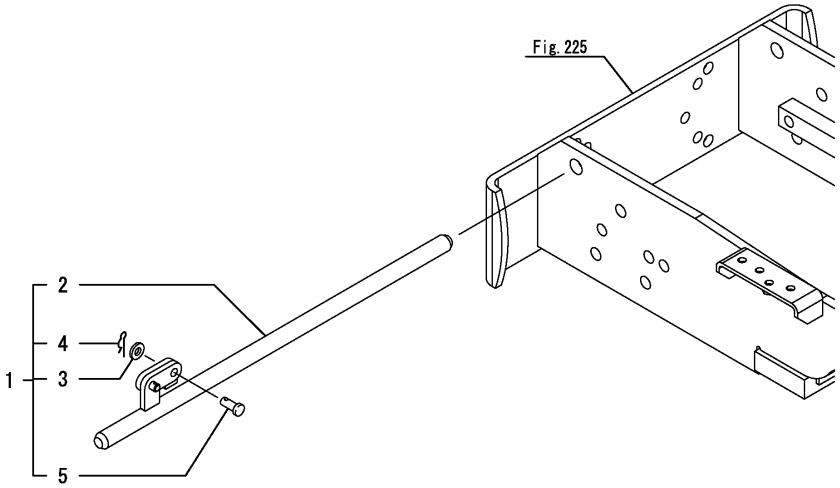

(A)=EG326Y (D)=EG334Y
(B)=EG328Y (E)=
(C)=EG330Y (F)=

No.	Lev.	Parts No.	Description	Q'ty (A)	(B)	(C)	(D)	(E)	(F)	I	R
1	1	1A7180-11000	PIN KIT, LOCK	1	1	1	1				
2	2	1A7180-11050	PIN ASSY, LOCK	1	1	1	1				
3	2	22137-080000	WASHER, 8	1	1	1	1				
4	2	22372-080000	PIN, SNAP 8	1	1	1	1				
5	2	22487-080160	PIN, H 8X 16	1	1	1	1				

N:Old ◄Yes/No► New, Q:Old ◄No/Yes► New, R:Old ◄Yes/Yes► New, S:Old ◄No/No► New, W:Add, Z:Discontinued, F:Interchangeable by set, K:Q'ty Change

Copyright (C) 2014 YANMAR CO., LTD. All RightsReserved.

Fig.274. SMV BRACKET

(A)=EG326Y
(B)=EG328Y
(C)=EG330Y
(D)=EG334Y
(E)=
(F)=

No.	Lev.	Parts No.	Description	Q'ty (A)	(B)	(C)	(D)	(E)	(F)	I	R
1	1	1A7180-93100	BRACKET KIT,SMV ROPS	1	1	1	1				
2	2	1A7180-93110	BRACKET, SMV ROPS	1	1	1	1				
3	2	22137-080000	WASHER, 8	3	3	3	3				
4	2	26106-080162	BOLT, M8X 16 PLATED	2	2	2	2				
5	2	26106-080452	BOLT, M8X 45 PLATED	1	1	1	1				
6	2	26716-080002	NUT, M8	3	3	3	3				

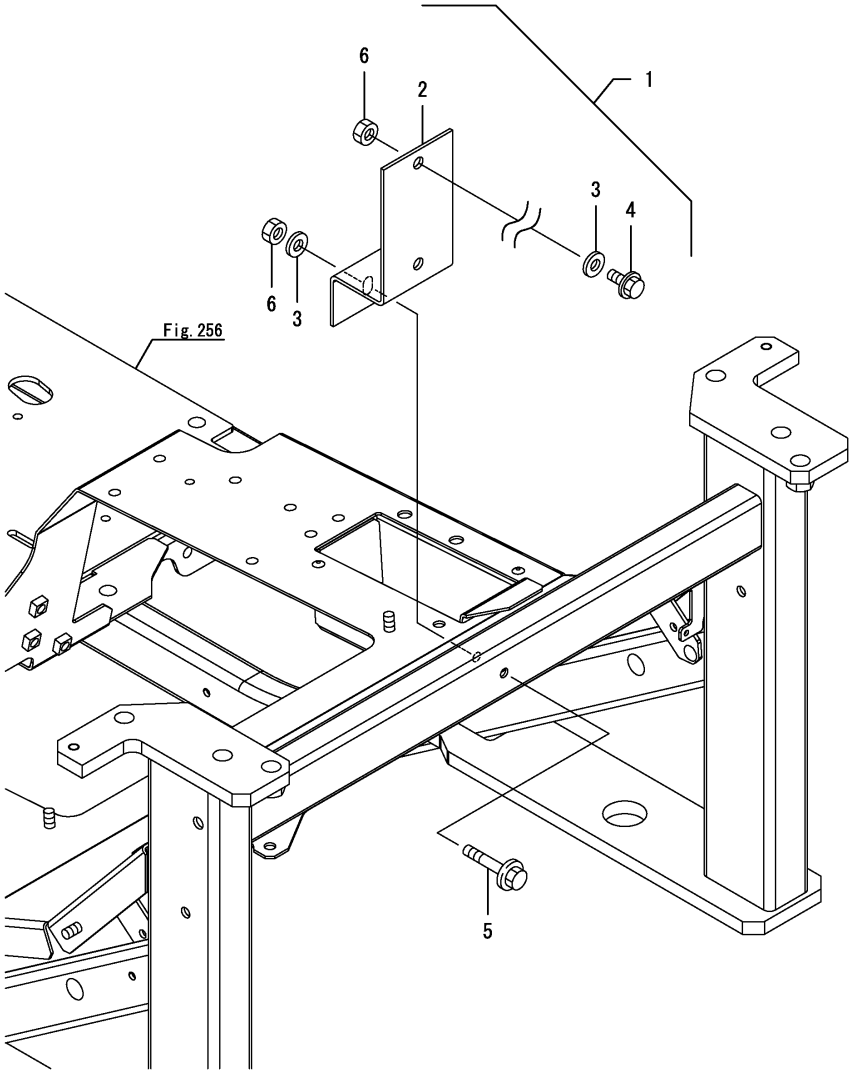

N:Old $\xleftrightarrow[\text{No}]{\text{Yes}}$ New, Q:Old $\xleftrightarrow[\text{Yes}]{\text{No}}$ New, R:Old $\xleftrightarrow[\text{Yes}]{\text{Yes}}$ New, S:Old $\xleftrightarrow[\text{No}]{\text{No}}$ New, W:Add, Z:Discontinued, F:Interchangeable by set, K:Q'ty Change

Copyright (C) 2014 YANMAR CO., LTD. All RightsReserved.

Fig.275. SMV BRACKET(CABIN)

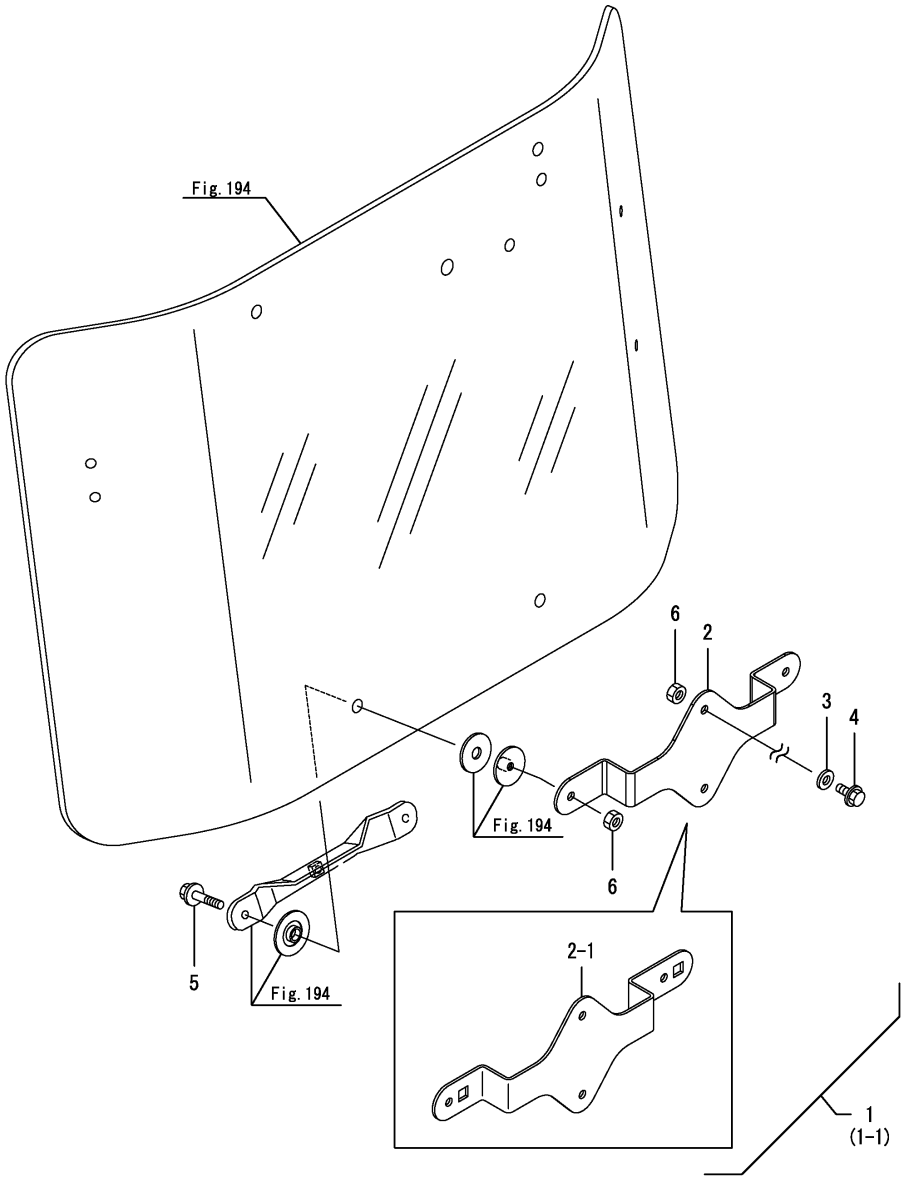

(A)=EG326Y (D)=EG334Y
(B)=EG328Y (E)=
(C)=EG330Y (F)=

No.	Lev.	Parts No.	Description	Q'ty (A)	(B)	(C)	(D)	(E)	(F)	I	R
1	1	1A7210-93100	BRACKET KIT,SMV CAB	1	1	1	1				
1-1	1	1A7210-93101	BRACKET KIT,SMV CAB.	1	1	1	1			S	
	(A=F090716)	(B=F080596)	(C=F071704) (D=F061533)								
2	2	1A7210-93110	BRACKET, SMV CABIN	1	1	1	1				
2-1	2	1A7210-93111	BRACKET, SMV CABIN	1	1	1	1			S	
	(A=F090716)	(B=F080596)	(C=F071704) (D=F061533)								
3	2	22137-080000	WASHER, 8	2	2	2	2				
4	2	26106-080162	BOLT, M8X 16 PLATED	2	2	2	2				
5	2	26106-080304	BOLT, M8X 30 PLATED	2	2	2	2				
6	2	26716-080002	NUT, M8	4	4	4	4				

N:Old $\xleftrightarrow[\text{No}]{\text{Yes}}$ New, Q:Old $\xleftrightarrow[\text{Yes}]{\text{No}}$ New, R:Old $\xleftrightarrow[\text{Yes}]{\text{Yes}}$ New, S:Old $\xleftrightarrow[\text{No}]{\text{No}}$ New, W:Add, Z:Discontinued, F:Interchangeable by set, K:Q'ty Change

Copyright (C) 2014 YANMAR CO., LTD. All RightsReserved.

Fig.279. MANUAL BRAKE

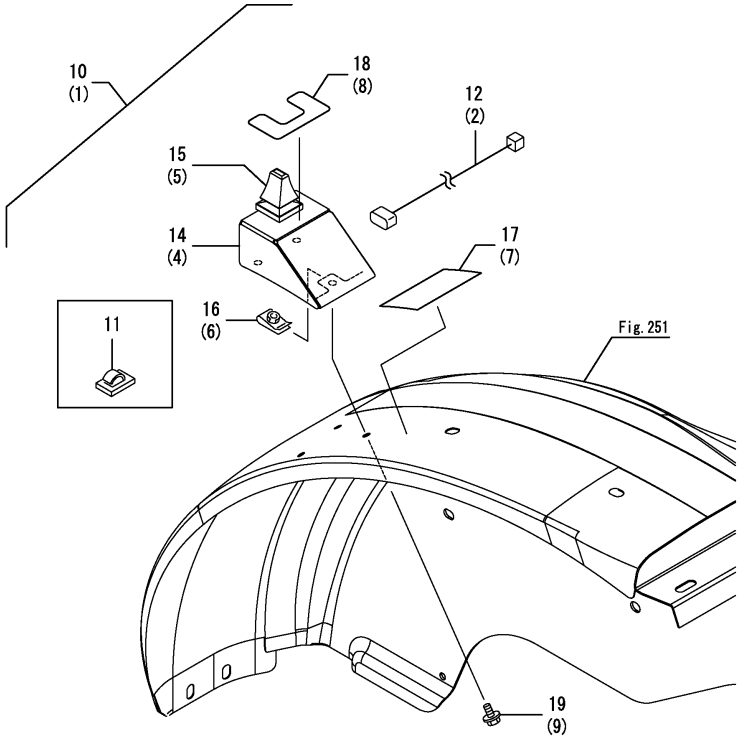

(A)=EG326Y (D)=EG334Y
(B)=EG328Y (E)=
(C)=EG330Y (F)=

No.	Lev.	Parts No.	Description	Q'ty (A)	(B)	(C)	(D)	(E)	(F)	I	R
1	1	1A7160-52410	BRAKE KIT, R			1	1				
2	2	1A7160-51910	WIRE HARNESS ASSY,R			1	1				
4	2	1A7160-52960	COVER ASSY, R SWITCH			1	1				
5	2	198121-55510	SWITCH ASSY			1	1				
6	2	198071-61890	NUT, SPEED M6			3	3				
7	2	1A7160-65900	LABEL, CAUTION			1	1				
8	2	1A7160-65910	LABEL, OPERATION			1	1				
9	2	26106-060122	BOLT, M6X 12 PLATED			3	3				
10	1	1A7160-52460	BRAKE KIT, L			1	1				
11	2	172010-07810	STICKER, WIRE			2	2				
12	2	1A7160-51900	WIRE HARNESS ASSY,L			1	1				
14	2	1A7160-52920	COVER ASSY, L SWITCH			1	1				
15	2	198121-55510	SWITCH ASSY			1	1				
16	2	198071-61890	NUT, SPEED M6			3	3				
17	2	1A7160-65900	LABEL, CAUTION			1	1				
18	2	1A7160-65910	LABEL, OPERATION			1	1				
19	2	26106-060122	BOLT, M6X 12 PLATED			3	3				

Remarks
* Applied to the following models.
(Rops specification)EG330A, EG330K, EG330KW, EG334A, EG334KW

N:Old $\frac{\text{Yes}}{\text{No}}$ New, Q:Old $\frac{\text{No}}{\text{Yes}}$ New, R:Old $\frac{\text{Yes}}{\text{Yes}}$ New, S:Old $\frac{\text{No}}{\text{No}}$ New, W:Add, Z:Discontinued, F:Interchangeable by set, K:Q'ty Change

Copyright (C) 2014 YANMAR CO., LTD. All RightsReserved.

Fig.287. CONTROLER(VSPEED)

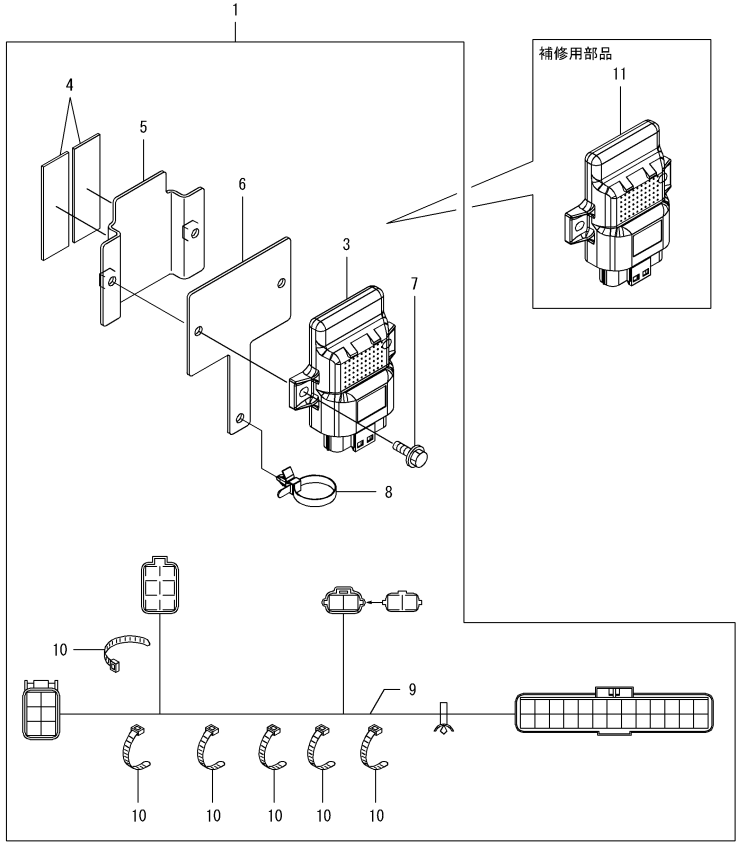

(A)=EG326Y (D)=EG334Y
(B)=EG328Y (E)=
(C)=EG330Y (F)=

No.	Lev.	Parts No.	Description	Q'ty (A)	(B)	(C)	(D)	(E)	(F)	I	R
1	1	1A7140-50900	CONTROL KIT, VSPEED	1	1	1	1				3
3	2	1A7140-50500	CONTROL UNIT, VSP	1	1	1	1				1
4	2	1A7140-58910	TAPE	2	2	2	2				
5	2	1A7140-58950	STAY ASSY,CONTROLLER	1	1	1	1				
6	2	1A7140-58970	PLATE, CONTROLLER	1	1	1	1				
7	2	26106-060202	BOLT, M6X 20 PLATED	2	2	2	2				
8	2	194680-51670	BAND, CLIP	1	1	1	1				
9	2	1A7140-51980	HARNESS, VSPEED	1	1	1	1				
10	2	29622-250001	BAND, RF250	6	6	6	6				
11	1	1A7805-50900	CONTROL UNIT,SERVICE	1	1	1	1				2

Remarks
* Optional parts.
(1)Eco Controler
This part cannot be ordered.
Spare the part using a Service controler with the proper product information installed.
(2)Service Controler
If the proper information is not installed, the product will not operate.
To install proper information go to an authorized Distributor.
* Product model : KIT-VSPEED

N:Old ◄Yes/No► New, Q:Old ◄No/Yes► New, R:Old ◄Yes/Yes► New, S:Old ◄No/No► New, W:Add, Z:Discontinued, F:Interchangeable by set, K:Q'ty Change

Copyright (C) 2014 YANMAR CO., LTD. All RightsReserved.

Fig.288. SMV BRACKET

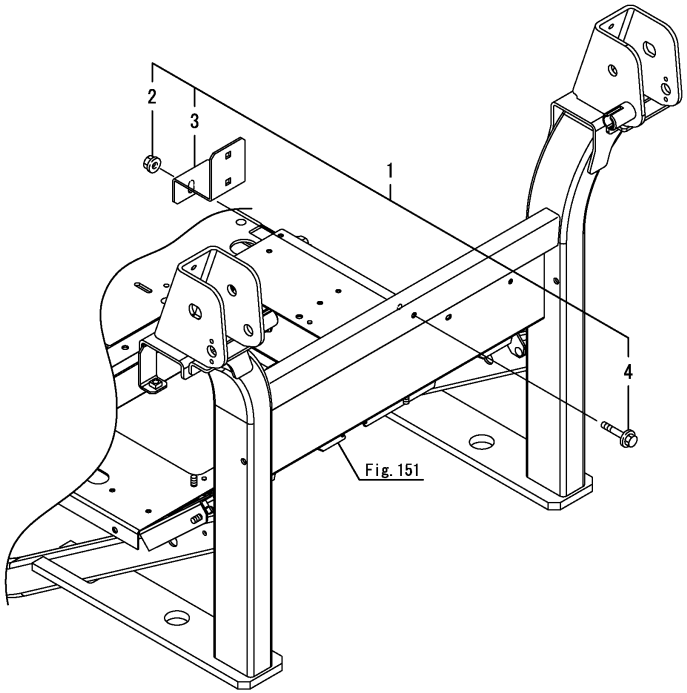

(A)=EG326Y (D)=EG334Y
(B)=EG328Y (E)=
(C)=EG330Y (F)=

No.	Lev.	Parts No.	Description	Q'ty (A)	(B)	(C)	(D)	(E)	(F)	I	R
1	1	7A7180-93110	BRACKET KIT,SMV ROPS	1	1	1	1				
2	2	194990-22140	NUT, M8	1	1	1	1				
3	2	1A8131-93111	BRACKET, SMV	1	1	1	1				
4	2	26106-080452	BOLT, M8X 45 PLATED	1	1	1	1				

Remarks
* Optional parts.

N:Old $\frac{\text{Yes}}{\text{No}}$ New, Q:Old $\frac{\text{No}}{\text{Yes}}$ New, R:Old $\frac{\text{Yes}}{\text{Yes}}$ New, S:Old $\frac{\text{No}}{\text{No}}$ New, W:Add, Z:Discontinued, F:Interchangeable by set, K:Q'ty Change

Copyright (C) 2014 YANMAR CO., LTD. All RightsReserved.

Fig.289. SMV BRACKET(CABIN)

(A)=EG326Y (D)=EG334Y
(B)=EG328Y (E)=
(C)=EG330Y (F)=

No.	Lev.	Parts No.	Description	Q'ty (A)	(B)	(C)	(D)	(E)	(F)	I	R
1	1	7A7210-93130	BRACKET KIT,SMV CAB	1	1	1	1				
2	2	1A8110-83730	NUT, CAP M8	2	2	2	2				
3	2	1A7210-93130	BRACKET ASSY,SMV CAB	1	1	1	1				

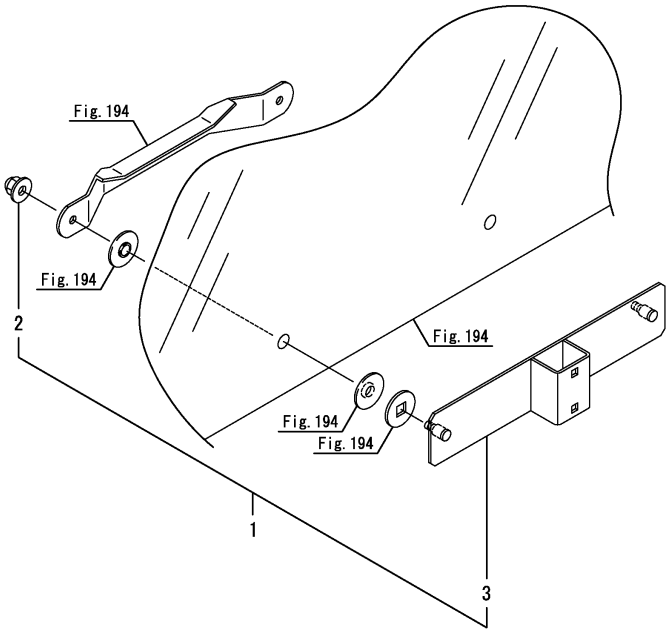

Remarks
* Optional parts.

N:Old $\overset{\text{Yes}}{\underset{\text{No}}{\leftrightarrow}}$ New, Q:Old $\overset{\text{No}}{\underset{\text{Yes}}{\leftrightarrow}}$ New, R:Old $\overset{\text{Yes}}{\underset{\text{Yes}}{\leftrightarrow}}$ New, S:Old $\overset{\text{No}}{\underset{\text{No}}{\leftrightarrow}}$ New, W:Add, Z:Discontinued, F:Interchangeable by set, K:Q'ty Change

Copyright (C) 2014 YANMAR CO., LTD. All RightsReserved.

Fig.290. SMV EMBLEM

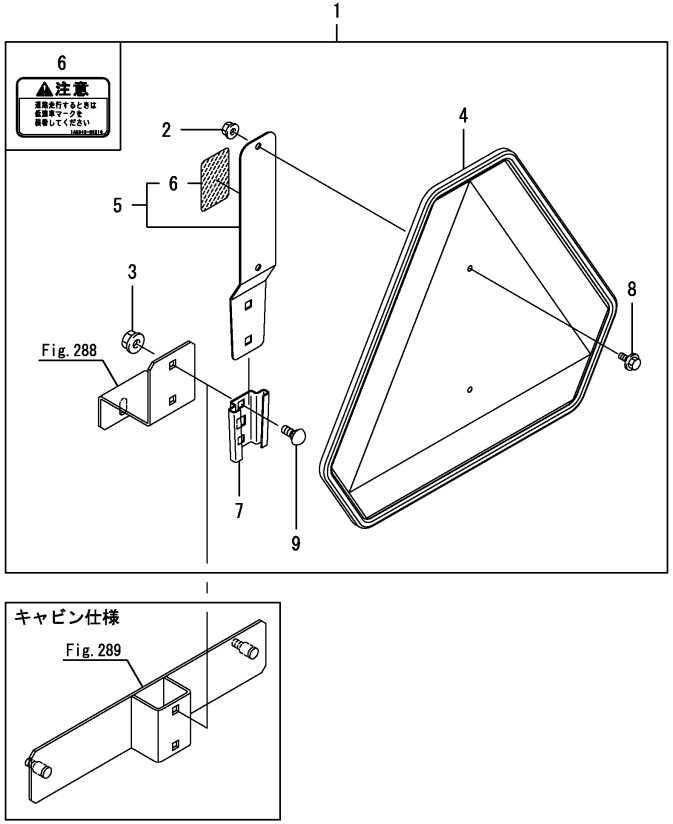

(A)=EG326Y (D)=EG334Y
(B)=EG328Y (E)=
(C)=EG330Y (F)=

No.	Lev.	Parts No.	Description	Q'ty (A)	(B)	(C)	(D)	(E)	(F)	I	R
1	1	7A8160-65800	SMV KIT	1	1	1	1				
2	2	194990-22130	NUT, M6	2	2	2	2				
3	2	194990-22140	NUT, M8	2	2	2	2				
4	2	1A8160-65800	EMBLEM, SMV	1	1	1	1				
5	2	7A7882-85620	M ASSY, STAY SMV	1	1	1	1				
6	3	1A8343-65210	LABEL, CAUTION SMV	1	1	1	1				
7	2	1A7882-85630	HOLDER, SMV	1	1	1	1				
8	2	26106-060202	BOLT, M6X 20 PLATED	2	2	2	2				
9	2	26487-080163	BOLT, M8X16	2	2	2	2				

Remarks
* Optional parts.

N:Old $\overset{\text{Yes}}{\underset{\text{No}}{\leftrightarrow}}$ New, Q:Old $\overset{\text{No}}{\underset{\text{Yes}}{\leftrightarrow}}$ New, R:Old $\overset{\text{Yes}}{\underset{\text{Yes}}{\leftrightarrow}}$ New, S:Old $\overset{\text{No}}{\underset{\text{No}}{\leftrightarrow}}$ New, W:Add, Z:Discontinued, F:Interchangeable by set, K:Q'ty Change

Copyright (C) 2014 YANMAR CO., LTD. All RightsReserved.

Fig.291. SMV EMBLEM(SMALL)

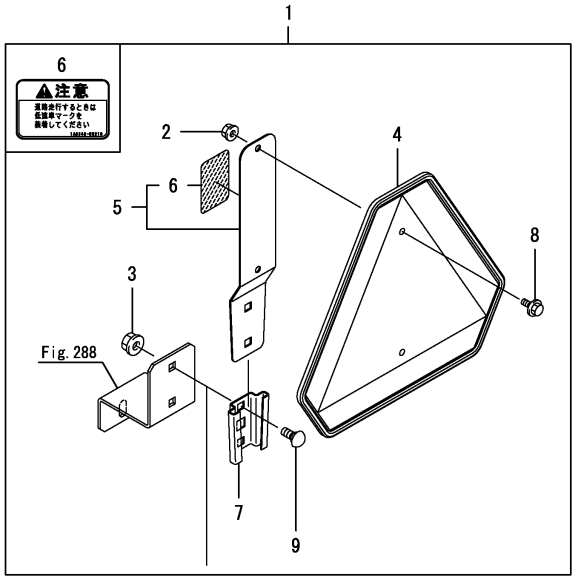

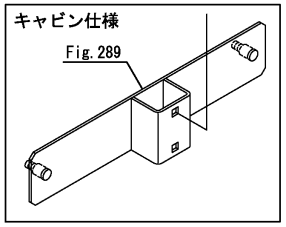

(A)=EG326Y (D)=EG334Y
(B)=EG328Y (E)=
(C)=EG330Y (F)=

No.	Lev.	Parts No.	Description	Q'ty (A)	(B)	(C)	(D)	(E)	(F)	I	R
1	1	7A8343-65800	SMV KIT, SMALL	1	1	1	1				
2	2	194990-22130	NUT, M6	2	2	2	2				
3	2	194990-22140	NUT, M8	2	2	2	2				
4	2	1A8343-65800	EMBLEM ASSY, SMV	1	1	1	1				
5	2	7A7882-85620	M ASSY, STAY SMV	1	1	1	1				
6	3	1A8343-65210	LABEL, CAUTION SMV	1	1	1	1				
7	2	1A7882-85630	HOLDER, SMV	1	1	1	1				
8	2	26106-060202	BOLT, M6X 20 PLATED	2	2	2	2				
9	2	26487-080163	BOLT, M8X16	2	2	2	2				

Remarks
* Optional parts.

N:Old $\overset{\text{Yes}}{\underset{\text{No}}{\leftrightarrow}}$ New, Q:Old $\overset{\text{No}}{\underset{\text{Yes}}{\leftrightarrow}}$ New, R:Old $\overset{\text{Yes}}{\underset{\text{Yes}}{\leftrightarrow}}$ New, S:Old $\overset{\text{No}}{\underset{\text{No}}{\leftrightarrow}}$ New, W:Add, Z:Discontinued, F:Interchangeable by set, K:Q'ty Change

Copyright (C) 2014 YANMAR CO., LTD. All RightsReserved.

Fig.307. SWITCH(LIFT UP)

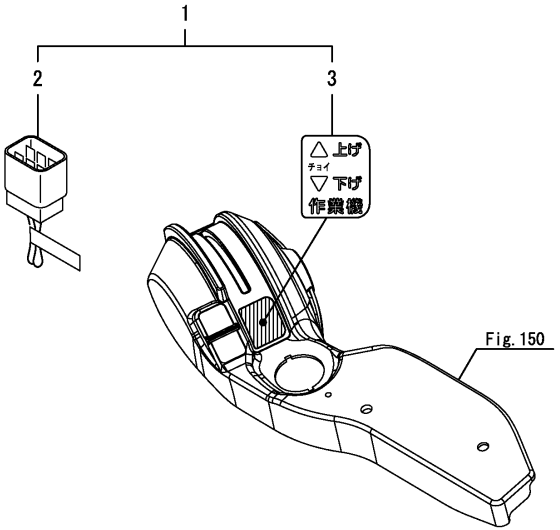

(A)=EG326Y
(B)=EG328Y
(C)=EG330Y
(D)=EG334Y
(E)=
(F)=

No.	Lev.	Parts No.	Description	Q'ty (A)	(B)	(C)	(D)	(E)	(F)	I	R
1	1	1A7180-51950	SWITCH KIT, LIFT UP	1	1	1	1				
2	2	1A7185-51250	COUPLER, SELECT	1	1	1	1				
3	2	1A7185-65740	LABEL, INCHING	1	1	1	1				

N:Old $\xleftarrow[\text{No}]{\text{Yes}}$ New, Q:Old $\xleftarrow[\text{Yes}]{\text{No}}$ New, R:Old $\xleftarrow[\text{Yes}]{\text{Yes}}$ New, S:Old $\xleftarrow[\text{No}]{\text{No}}$ New, W:Add, Z:Discontinued, F:Interchangeable by set, K:Q'ty Change

Copyright (C) 2014 YANMAR CO., LTD. All RightsReserved.

Fig.308. REPAIR PARTS(DIFFERENTIAL LOCK PEDAL)

(A)=EG326Y (D)=EG334Y
(B)=EG328Y (E)=
(C)=EG330Y (F)=

No.	Lev.	Parts No.	Description	Q'ty (A)	(B)	(C)	(D)	(E)	(F)	I	R
1	1	1A7180-33240	PEDAL KIT, DIFF ROCK	1	1	1	1				
2	2	1A7180-33190	HOOK, SPRING	1	1	1	1				
3	2	1A7180-33250	PEDAL, DIFF ROCK	1	1	1	1				
4	2	198290-37510	SPRING, RETURN	1	1	1	1				

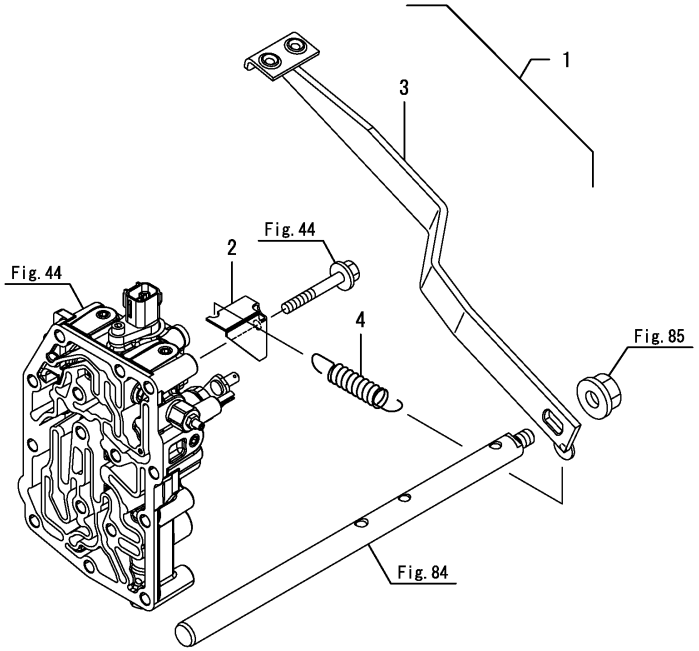

N:Old $\xleftrightarrow[\text{No}]{\text{Yes}}$ New, Q:Old $\xleftrightarrow[\text{Yes}]{\text{No}}$ New, R:Old $\xleftrightarrow[\text{Yes}]{\text{Yes}}$ New, S:Old $\xleftrightarrow[\text{No}]{\text{No}}$ New, W:Add, Z:Discontinued, F:Interchangeable by set, K:Q'ty Change

Copyright (C) 2014 YANMAR CO., LTD. All RightsReserved.

Fig.309. REPAIR PARTS(GYRO SENSOR)

(A)=EG326Y (D)=EG334Y
(B)=EG328Y (E)=
(C)=EG330Y (F)=

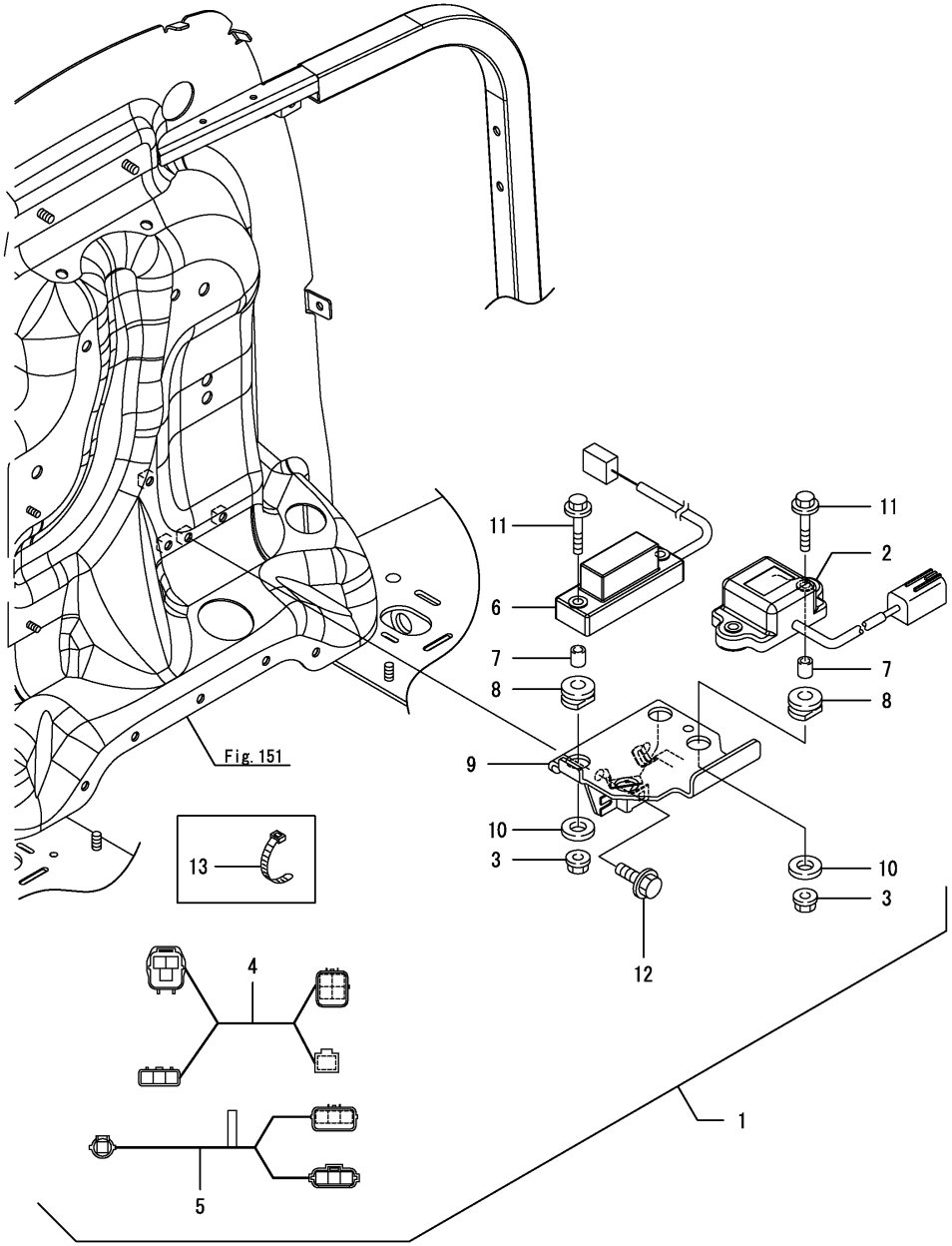

No.	Lev.	Parts No.	Description	Q'ty (A)	(B)	(C)	(D)	(E)	(F)	I	R
1	1	1A7180-51960	SENSOR KIT,GYRO	1	1	1	1				
2	2	1C7200-07101	SENSOR,ANGULAR SPEED	1	1	1	1				
3	2	194990-22130	NUT, M6	4	4	4	4				
4	2	1A7180-51980	HARNESS, GYRO	1	1	1	1				
5	2	1A7180-51990	HARNESS, POWER	1	1	1	1				
6	2	1A7870-78110	SENSOR, SWING	1	1	1	1				
7	2	1A7260-78700	SPACER, 11.3	4	4	4	4				
8	2	198129-78720	GROMMET, 10-16	4	4	4	4				
9	2	1A7180-78740	BRACKET ASSY, SENSOR	1	1	1	1				
10	2	22157-060000	WASHER, 6	4	4	4	4				
11	2	26106-060402	BOLT, M6X 40 PLATED	4	4	4	4				
12	2	26106-080162	BOLT, M8X 16 PLATED	2	2	2	2				
13	2	29622-140001	BAND, RF140	10	10	10	10				

N:Old $\frac{\text{Yes}}{\text{No}}$ New, Q:Old $\frac{\text{No}}{\text{Yes}}$ New, R:Old $\frac{\text{Yes}}{\text{Yes}}$ New, S:Old $\frac{\text{No}}{\text{No}}$ New, W:Add, Z:Discontinued, F:Interchangeable by set, K:Q'ty Change

Copyright (C) 2014 YANMAR CO., LTD. All RightsReserved.

Parts No. Index

Parts No.	Fig. No.	Ref. No.
0A041-J00800	215	2
0A041-J00804	215	2 -4
0A041-J00809	215	2 -9
0A041-JA0030	215	2 -10
0A041-JA0031	215	2 -11
0A041-JA0150	306	2
114270-59010	3	23
		24
		25
	4	25
		26
		27
	10	9
		10
		11
		12
	11	9
		10
		11
		12
	224	7
		8
		9
		10
114270-59010-1	292	32
		33
		34
119060-61990	5	16
119225-52102	2	7
119629-59910	10	13
	11	13
	224	11
119650-77910	129	4
119802-55801	2	18
119808-12520	3	10 A
	4	10 A
	292	13
119808-12540	3	10 C
	4	10 C
	292	15
119866-12541	3	10 B
	4	10 B
	292	16
120147-44810	204	3
	305	2
121750-49150	3	17
	4	17
	292	23
124223-39900	2	2
124550-77030	120	14

Parts No.	Fig. No.	Ref. No.
124550-77030	246	14
124756-77040	120	15
	246	15
129004-55612	2	8
129052-13550	2	1
129054-77811	5	12
129054-77820	5	13
129054-96150	4	32
129054-96970	211	21
129054-96980	211	22
129054-96990	211	23
129150-49081	2	5
129242-55720	2	10
129242-55730	2	11
129242-55740	2	12
129242-55750	2	13
129242-55760	2	14
129242-55770	2	15
129263-44510	2	3
129268-55700	2	9
129268-55701	2	9 -1
129418-12530	3	10 D
	4	10 D
	292	14
129457-96200	211	18
129457-96230	211	19
129550-49090	2	6
129550-49101	2	4
129927-77690	139	9
	248	9
129972-96980	211	22 -1
145610-83400	78	36
168218-01050	44	5
168218-01080	44	8
168219-00011	44	1
168219-00012	44	1 -1
168219-01011	44	2
168219-01030	44	3
168219-01040	44	4
168219-01060	44	6
168219-01070	44	7
168219-01080	44	9
168219-01100	44	10
168219-01110	44	11
168219-01120	44	12
168219-01150	44	13
168219-01200	44	14
168219-01210	44	16
168219-01250	44	17
168219-01350	44	5 -1

Parts No.	Fig. No.	Ref. No.
168219-01380	44	8 -1
1682D1-01050	47	6
1682D1-01060	47	7
1682D1-01070	47	8
1682D1-01080	47	9
1682D1-01100	47	4
1682D2-00010	47	1
1682D2-00011	47	1 -1
1682D2-01010	47	2
1682D2-01011	47	2 -1
1682D2-01150	47	20 A
168461-01150	78	5
168HQ0-87690	78	19
168KA0-29001	78	1
168KA0-29150	78	7
168KA0-29160	78	8
168KA0-29170	78	9
168KA0-29180	78	10
168KA0-29200	78	12
168KA0-29210	78	13
168KA0-29220	78	14
168KA0-29231	78	15
168KA0-29840	78	45
168KA0-29900	78	46
168KA1-29290	78	17
168KAA-29000	78	1 -2
168KAA-29002	78	1 -4
168KAA-29230	78	15 -1
172010-07810	218	2
	258	10
	279	11
172112-77361	113	4
172141-76900	113	9
172141-76920	36	4
172142-76181	35	8
	111	5
	112	5 -1
		7
	241	5
172157-72710	34	15
172730-75141	35	7
174570-57110	136	1
174842-13740	54	2 -1
	55	1 -1
175022-49750	3	18
		19
	4	18
		19
	292	24
		25

Parts No.	Fig. No.	Ref. No.
178073-01200	44	15
178076-02430	47	10
185100-50070	5	11
192159-27780	47	13
192159-27790	47	20 E
192159-27830	47	14
192167-24600	42	9
194065-34170	92	4
		15
	93	6
		15
	277	6
		17
	278	6
		17
	282	9
		20
	283	6
		17
194065-38300	97	5
194065-60580	194	2
	195	1
	301	3
	302	1
194065-65950	169	4
194066-13640	25	12
194080-34950	235	5
		10
194080-75790	220	7
	284	6
194130-33100	84	1
194130-34891-1	282	10
		21
194130-47851	109	8
194130-48650	102	55
	238	54
194130-75430	220	4
	284	3
194145-73150	184	14
	270	14
194145-75240	220	2
	284	1
194145-75250	184	11
	220	3
	270	11
	284	2
194150-22480	72	11
		19
194150-34650	235	2
		7

Parts No. Index

Parts No.	Fig. No.	Ref. No.
194150-45320	107	1
194151-36670	25	21
194151-47760	150	14
		22
	239	8
	255	15
194155-05250	14	4
194167-61650	249	24
194170-45370	47	15
194170-51210	4	20
194171-14800	228	2
		7
194171-14810	228	3
		8
194171-14820	228	4
		9
194180-12471	19	8
194180-25550	54	4
	55	4
194180-61980	3	30
	292	38
194180-72950	181	11
	300	11
194181-11560	18	3 A
194181-14180	92	3
		14
	93	4
		13
	277	4
		15
	278	4
		15
	282	7
		18
	283	4
		15
194190-26840	49	5
	57	20
	76	2
194191-28350	77	20
194197-25810	58	1
	60	2
	61	2
194197-25930	56	5
	64	3
194197-56350	155	1
	258	1
194205-63550	154	9
	156	6
	257	12

Parts No.	Fig. No.	Ref. No.
194240-35120-1	282	11
		22
194240-35231	282	5
		16
194240-65441	167	1
	168	2
	264	1
194250-25240	59	1
	77	1
194250-47490	72	14
		22
194250-51420	120	11
	246	11
194275-34810	93	7
		16
	277	7
		18
194275-62320	196	1
194279-14700	28	2
		7
194279-14700-1	281	2
		7
194300-21460	197	1
194300-25100	48	3
194305-32650	77	21
194310-43240	102	15
		15 -1
		15 -2
		54 F
	238	14
		14 -1
		14 -2
		53 F
194310-47790	150	15
		23
	239	9
	255	16
194311-13880	78	2
194311-13910	78	3
194312-25470	52	18
	53	18
	60	1
	61	1
194320-24930	72	2
194321-13230	21	3
194321-13250	21	5
194321-13270	21	7
194321-14820	281	4
		9
194321-14850	281	3

Parts No.	Fig. No.	Ref. No.
194321-14850	281	8
194321-14860	281	5
		10
194327-36530	96	10
194328-14810	276	3
		8
194328-14820	276	4
		9
194328-14830	276	5
		10
194330-62530	98	31
	150	8
194370-26350	62	2
	63	2
194420-05210	39	1 -1
	40	1 -1
194420-39370	77	23
194420-56620	8	6
194420-62260	115	7
	116	6
194432-34900	282	2
		13
194432-34910	282	3
		14
194432-34920	282	4
		15
194440-51620	42	11
	100	2
	183	2
	237	2
	269	2
194440-51630	210	2
194450-12552	19	2
		13
194450-12562	19	3
		14
194464-22160	62	1
	63	1
194465-13240	21	4
194465-13260	21	6
194515-01190	206	1
194550-47910	187	5
	189	7
194555-25880	76	1
194555-27450	72	12
		20
194555-32340	81	2
194555-34100	88	2
194555-34120	88	3
194555-34180	94	1

Parts No.	Fig. No.	Ref. No.
194555-34190	94	2
194555-34200	94	3
194555-34210	94	4
194555-34310	88	4
194555-65130	166	6
194555-77910	102	57
	238	56
194615-34900	278	9 -1
		20 -1
194615-34910	278	10 -1
		21 -1
194615-34920	283	11
		22
194640-25860	59	7
194640-26130	22	6
	59	10
	227	6
194640-42140	102	3
	238	3
194640-44250	104	4
194640-44261	104	5
194640-44540-1	104	13
194640-46410	107	5
194640-46420	107	6
194640-54100	218	6
194640-54110	218	6 A
194640-54120	218	6 B
194640-54130	218	6 C
194640-54140	218	6 D
194640-54150	218	6 E
194640-54160	218	6 F
194640-54170	218	7
194640-54180	218	6 G
194640-54190	218	6 H
194640-63560	155	7
	157	4
	258	7
	294	4
194640-72420	182	3
	183	5
	268	3
	269	5
194680-27540	68	6
194680-33560	77	22
194680-51670	3	20
		20 -1
		21
		45
	4	21
		21 -1

Parts No. Index

Parts No.	Fig. No.	Ref. No.
194680-51670	4	22
	10	7
	11	7
	116	5
	118	15
	119	15
	120	12
	154	4
	211	7
	224	5
	245	15
	246	12
	247	1
	257	5
	286	10
	287	8
	292	26
		27
		28
		29
	293	15
194680-77750	45	15
	233	15
194680-77770	78	18
194681-14790	93	5
		14
	277	5
		16
	278	5
		16
	282	8
		19
	283	5
		16
194697-47150	191	1
194697-62560	154	7
	156	4
	195	2
194740-00160	5	2
	213	1
	214	1
	217	3
		4
		4 -1
		30 A
	271	1
194850-31380	52	21
	53	21
194850-42500	102	10
	238	10

Parts No.	Fig. No.	Ref. No.
194940-47341	110	1
194940-61790	145	3
	146	5
		6
		7
	147	5
		6
		7
	150	5
		6
	210	3
	251	4
	255	5
		6
194940-65590	166	7
194990-22110	118	1
	119	3
	187	4
	189	5
		6
	245	2
	293	2
194990-22120	98	11
	154	3
	156	2
	200	1
	257	2
	303	1
194990-22130	3	14
	4	14
	10	6
	11	6
	31	22
	115	1
	116	1
	118	2
	119	4
	120	2
	132	1
	139	1
	140	1
	146	1
		2
	147	1
		2
	151	1
	189	1
	190	1
	193	35 -1
	194	27 -1

Parts No.	Fig. No.	Ref. No.
194990-22130	198	1
	210	1
	224	4
	230	24
	234	1
	245	3
	246	2
	248	1
	249	1
	286	5
		5 -1
	290	2
	291	2
	292	20
	293	3
	297	1
	301	1
	309	3
194990-22140	1	9
	3	15
		16
	4	15
		16
	9	3
	12	2
	98	15 A
	118	3
		4
	119	5
	120	3
	124	1
	137	1
	138	1
	150	1
	151	2
	154	11
	156	8
	159	1
	160	1
		2
		3
	164	1
	165	1
	189	2
	193	1
	202	7
	211	4
		5
	217	5
	218	3

Parts No.	Fig. No.	Ref. No.
194990-22140	243	1
	245	4
		5
	246	3
	251	1
		2
	255	1
	257	3
		4
	260	1
	261	1
		13
	262	1
	263	1
	285	1
	288	2
	290	3
	291	3
	292	21
		22
	293	4
	297	2
	298	1
194990-22150	217	6
	218	4
194990-22160	85	1
195184-15360	182	1
	183	1
	268	1
	269	1
195397-27810	181	1
		1 -1
	300	1
		1 -1
197810-84840	155	8
	258	8
197820-84740	193	30
	194	22
	301	26
197820-84750	193	31
	194	23
197820-88750	200	7
	303	5
197820-88760	200	8
	303	6
197820-88770	200	9
	303	7
197820-88780	200	10
	303	8
197830-84770	212	8

Parts No. Index

Parts No.	Fig. No.	Ref. No.
197830-85490	118	20
		20 -2
	206	2
	245	1
198010-65850	217	7
198010-65860	217	8
198010-85810	195	26
	206	4
	302	24
198071-12451	19	6
		11
198071-12460	19	7
		12
198071-14810	228	5
		10
198071-15720	33	2
198071-17481	34	13
198071-24350	42	7
198071-27470-1	69	9
198071-37490	98	8
		20
		22
198071-37510	98	9
		13
		21
198071-51271	218	5
198071-54012	218	1
198071-58810	6	7
	191	54
		57
198071-61890	141	5
	142	6
		7
	143	5
		6
	198	3
		4
	211	11
	212	1
	250	5
	279	6
		16
198071-62800	152	2
	153	2
198071-62890	152	3
	153	3
198071-62900	152	4
	153	4
198071-65610	140	21
	166	8

Parts No.	Fig. No.	Ref. No.
198071-65610	249	22
198071-65690	167	7
	168	8
	264	7
198071-78510	183	27
	269	27
198071-85420	218	8
198071-85440	200	2
	303	2
198071-85501	217	11
198071-85820	217	12
198072-04510	8	3
198072-12440	19	5
		10
198072-13760	25	15
198072-15810	31	20
	230	20
198072-17440	34	12
198072-27650-3	69	10
198072-32110	80	8
198072-53450	132	6
		11
198072-60590	115	5
	135	2
	140	2
		3
		4
	141	1
	142	1
		2
	143	1
		2
	144	1
	145	1
	146	3
		4
	147	3
		4
	148	1
	149	1
	151	4
	159	2
	160	5
	190	2
	198	2
	211	10
	249	2
		3
		4
	254	1

Parts No.	Fig. No.	Ref. No.
198072-62790	152	1
	153	1
198072-65560	174	1
	175	1
	267	1
198072-65710	180	2
198072-65730	180	4
198073-14750	228	1
198073-14850	228	6
198081-34700	282	1
198081-34800	282	12
198082-17880	36	3
198091-34100	89	2
198091-34130	89	3
198091-75710-1	220	5
	284	4
198093-82510	164	6
	165	7
	191	26
	216	4
198093-83751	194	19
198093-83752	194	19 -1
	301	23
198093-84810	15	12
	191	61
	196	21
		22
	210	8
		9
		9 -1
	226	15
198093-84860	195	21
	302	19
198093-85650	198	12
198094-01260	5	6
198094-82540	194	4
	195	6
	301	5
	302	3
198094-82550	193	2
	194	5
		6
198094-83620	194	12
	301	11
198094-83640	194	14
	301	15
198094-83650	194	16
	301	17
198094-85570	196	28
	198	9

Parts No.	Fig. No.	Ref. No.
198094-85570	206	3
198094-85710	149	4
	196	27
198094-86060	203	2
	204	4
198094-86410	201	4
	304	4
198094-86560	204	13
	305	4
198094-86580	204	8
198101-65361	178	3
	179	3
198101-65921	178	5
198101-85091	178	6
198101-85411	213	5
	214	5
	271	5
198101-85541	213	7
	214	7
	271	6
198101-85581	213	8
	214	8
	271	7
198101-85620	217	13
198101-85690	217	14
198101-85701	217	15
198101-85702	217	15 -1
198101-85940	217	18
198101-85961	217	19
198101-85971	217	20
198103-85600	217	2
198103-85601	217	2 -1
198103-85850	217	16
198103-85860	217	17
198107-34920	278	11 -1
		22 -1
198119-27150	68	2
198121-47111	109	7
198121-48870	102	56
	238	55
198121-55510	279	5
		15
198121-85150	213	3
	214	3
	271	3
198121-85320	213	4
	214	4
	271	4
198129-63691	197	2
198129-78710	5	17

Parts No. Index

Parts No.	Fig. No.	Ref. No.
198129-78710	211	12
198129-78720	211	13
	286	7
		7 -1
	309	8
198133-14750	28	1
198133-14760	28	3
		8
	229	2
		7
198133-14770	28	4
		9
	229	3
		8
198133-14780	28	5
		10
	229	4
		9
198133-14850	28	6
198133-22510	98	6
		17
198133-22530	98	7
		12
		18
198133-25860	54	12
	55	14
	59	8
198133-34130	30	1
	95	1
198133-34730	92	10
		21
198133-34760	278	9
		20
198133-34770	278	10
		21
198133-34780	278	11
		22
198133-64400	199	2
	262	7
	263	8
	272	6
198133-65910	178	4
	179	4
198133-71600-1	181	4
	300	4
198133-71700-1	181	5
	300	5
198133-78680	188	14
		15
198137-14710	29	3

Parts No.	Fig. No.	Ref. No.
198137-14710	29	8
198137-14720	29	4
		9
198137-14730	29	5
		10
198138-49100	115	3
	116	3
198146-15240	31	3
	230	3
198146-34740	278	7
		18
	283	7
		18
198146-86120	119	18
	293	18
198149-25700	59	3
198149-25780	59	4
198149-25790	54	6
	55	8
	59	6
198149-25890	54	13
	55	15
	59	5
		9
198153-51540	124	2
198153-51810	118	16
	119	16
	245	16
	293	16
198153-83710	193	26
	194	17
	301	18
198153-83720	193	27
	194	18
	301	19
198153-83730	193	28
198162-52110	126	3
198162-52150	126	6
198164-15780	231	4
198165-01130	5	4
198165-21490	21	12
198167-26240	52	19
	53	19
	57	17
	77	2
198181-74620	184	8
	270	8
198181-74630	184	9
	270	9
198181-74670	184	10

Parts No.	Fig. No.	Ref. No.
198181-74670	270	10
198196-34700	235	1
198196-34800	235	6
198196-34900	235	3
		8
198196-34910	235	4
		9
198200-14210	27	4
198200-18350	31	21
	230	21
198200-18370	31	21 B
	230	23
198200-24320	49	1
198200-27811	71	2
198200-27911	72	17
198200-37240	98	15 B
198200-56060	134	2
198200-56080	134	3
198200-61490	14	5
198200-61580	124	3 -1
198200-62910	152	5
	153	5
198200-62970	153	6
198200-63620	149	3
198200-65810	167	12
	168	13
	264	12
198200-65850	167	13
	168	14
	264	13
198200-78710	189	21
198200-78730	189	22
198200-85602	217	1
198200-85603	217	1 -1
198200-85900	217	31
198200-85920	217	32
198200-85930	217	33
198208-62920	155	6
	157	3
	258	6
	294	3
198208-82260	191	11
198208-83680	193	25
198208-84190	196	3
198208-85610	198	10
198208-85620	198	11
198208-87410	208	10
198208-87980	208	21
198208-88980	210	20
198212-25150	49	4

Parts No.	Fig. No.	Ref. No.
198212-26330	41	6
198213-24750	47	11
198217-25680	55	7
	59	2
198220-11520	34	1
198220-15770	231	3
198220-25830	54	9
	55	11
198220-25840	54	10
	55	12
198220-45350	107	2
198220-45370	107	3
198220-46400	107	4
198220-51570	124	2 -1
198220-52180	129	1
198220-61340	3	28
	4	30
	292	36
198220-62150	151	6
	190	3
	191	2
198220-62220	183	4
	269	4
198220-63340	193	8
		15
	199	1
	262	2
	263	2
	272	2
198223-52150	126	8
	127	6
198230-61560	37	3
	232	3
198230-61960	3	29
	4	31
	292	37
198240-04550	8	4
198240-11640	34	2
198240-25810	54	8
	55	10
198240-61880	210	4
198241-14650	22	5
	227	5
198242-34950	277	9
		20
198242-34960-1	277	10
		21
198242-34970	277	11
		22
198249-34900	283	9

Parts No. Index

Parts No.	Fig. No.	Ref. No.
198249-34900	283	20
198249-34910	283	10
		21
198251-13670	20	8
198255-24460-1	46	6
198255-34100	93	3
		12
	277	3
		14
	282	6
		17
198255-82640	191	35
	217	9
	301	12
198255-82650	191	37
		38
	193	3
	194	7
198255-82660	191	40
		41
	193	4
	194	8
	217	10
198255-82701	191	45
198255-82840	194	9
198255-83550	198	5
198268-34850	92	8
		19
198268-46552	109	1
	239	1
198268-46580	109	2
	239	2
198268-46600	109	3
	239	3
198268-46610	109	4
	239	4
198268-47451	240	1
198268-53450	131	3
		11
198268-64810	163	1
	295	1
198268-82270	191	13
		13 -1
	194	3
198273-18360	31	21 A
	230	22
198273-27870	72	16
198280-04470	10	1 -1
	11	1 -1
198282-24330	41	4

Parts No.	Fig. No.	Ref. No.
198283-13480	18	4
198290-26850	65	1
198290-37510	31	23
	98	27
	230	25
	308	4
198291-72790	183	17
	269	17
198320-71500-1	181	3
	300	3
198327-65352	178	2
	179	2
198327-65711	180	3
198327-65921	179	5
198360-03260	119	1 -1
	204	1
	293	1
	305	1
198360-31500	80	2
198360-31510	80	3
198360-31530	80	4
198360-31800	80	5
198360-31810	80	6
198360-31850	80	7
198360-33500	86	3
198360-52320	126	4
198360-52330	126	5
198360-55630	6	6
198360-78571	189	15
198361-48750	113	3
198361-48770	102	71
	238	70
198361-77371	183	26
198361-77380	183	25
198366-14700	29	2
		7
	276	2
		7
198366-14701	29	2 -1
		7 -1
	276	2 -1
		7 -1
198390-25790	54	7
	55	9
198390-43360	103	5
198415-25840	54	11
	55	13
198421-33140	84	3
198440-64100	164	4
	165	5

Parts No.	Fig. No.	Ref. No.
198440-64100	216	3
	262	6
	263	7
	272	5
198448-04250	10	1
	11	1
198448-15700	33	1
198448-27470-1	68	5
198448-43260	103	2
198448-43270	103	3
198448-45150	102	72
	238	71
198448-51460	118	13
	119	14
	211	6
	245	14
	293	14
198448-51910	3	45 -1
	4	24
	292	30
198448-52250	189	8
198448-52280	126	16
	127	14
198448-78560	189	14
198460-34100	278	3
		14
	283	3
		14
198460-83350	159	10
	160	17
	191	60
	193	6
	194	10
	198	21
	252	2
	253	2
	257	13
		14
		15
	260	8
	261	9
198461-52950	129	2
		3
198463-63360	160	14
198463-82350	191	15
198463-82550	191	29
198463-82551	191	29 -1
198463-82632	191	34
198463-83760	193	29
	194	20

Parts No.	Fig. No.	Ref. No.
198463-83760	301	24
198463-84720	195	18
	302	16
198463-84740	195	19
	302	17
198463-84760	195	20
	302	18
198463-85610	210	10
198463-86510	206	6
198463-86520	206	7
198463-86771	206	8
198463-86851	206	10
198463-87630	210	14
198475-32660	27	5
	88	1
198475-36810	97	1
	183	9
	269	9
198475-36840	97	3
198475-37690	98	29
198475-37770	98	14
198475-37780	98	15
198479-22350	38	1
198480-72680	183	11
	269	11
198480-72690	183	12
	269	12
198483-32660	89	1
198492-82150	191	5
198492-82590	191	32
198535-48080	114	1
	242	1
198535-52110	118	7
	119	8
	245	8
	293	9
198535-52120	118	8
	119	9
	245	9
	293	10
198535-52130	118	9
	119	10
	245	10
	293	11
198535-52140	118	10
	119	11
	245	11
	293	12
198535-52410	118	11
	119	12

Parts No. Index

Parts No.	Fig. No.	Ref. No.
198535-52410	245	12
	293	13
1A1040-28470	42	10
1A2260-87100	178	7
	179	6
1A6150-73700	182	6
	183	24
	184	5
	268	6
	269	24
	270	5
1A6210-22600	98	1
1A6240-26830	52	11
	53	11
	57	15
	77	13
1A6382-52530	188	3
1A6481-62650	154	8
	156	5
	257	7
1A6650-25470	54	2
	55	1
1A6750-26290	57	19
1A6750-37200	98	2
1A6770-25030	58	3 -1
1A6770-26610	47	12
1A7000-34760	236	1
1A7000-34860	236	6
1A7000-34950	236	3
		8
1A7000-34960	236	4
		9
1A7000-34970	236	5
		10
1A7000-51540	123	1
1A7000-52820	120	8
	246	8
1A7010-34650	90	2
		5
	236	2
		7
1A7020-34700	92	1
1A7020-34710	92	2
		13
1A7020-34720	92	5
		16
1A7020-34760	92	6
		17
1A7020-34790	92	7
		18

Parts No.	Fig. No.	Ref. No.
1A7020-34800	92	12
1A7020-34900	92	9
		20
1A7020-34910	92	11
		22
1A7030-65950	168	16
1A7030-80940	210	5
1A7030-81190-1	210	6
1A7030-83630	194	13
	301	13
1A7030-84141	195	9
	302	6
1A7030-85590	196	26
1A7030-86870	210	11
1A7030-86980	208	3
1A7030-87040	208	4
1A7030-87151	208	5
1A7030-87190	208	7
1A7030-87201	208	29
	209	1
1A7030-87211	209	2
1A7030-87220	209	3
1A7030-87240	209	10
1A7030-87251	209	11
1A7030-87260	195	27
	302	25
1A7030-87270	209	12
1A7030-87280	209	13
1A7030-87290	209	14
1A7030-87300	209	15
1A7030-87310	209	16
1A7030-87320	212	3
		5
1A7030-87330	209	17
1A7030-87340	209	18
1A7030-87350	209	19
1A7030-87360	209	20
1A7030-87380	212	2
1A7030-87390	212	4
1A7030-87411	212	6
1A7030-87470	210	13
1A7030-87500	212	7
1A7030-87510	212	9
1A7030-87560	212	10
1A7030-87590	212	11
1A7030-87650	212	19
1A7030-87660	212	12
1A7030-87670	212	13
1A7030-87680	212	14
1A7030-87720	210	15

Parts No.	Fig. No.	Ref. No.
1A7030-87730	210	16
1A7030-87741	208	24 -1
1A7030-87760	208	11
1A7030-87770	208	12
1A7030-87780	208	13
1A7030-87790	208	8
		14
1A7030-87810	208	15
1A7030-87820	210	17
1A7030-87850	208	16
1A7030-87860	212	20
1A7030-87870	212	21
1A7030-87911	207	15
	219	2
1A7030-87970	208	20
1A7030-87990	208	22
1A7030-88060	208	23
1A7030-88070	209	21
1A7030-88080	209	22
1A7030-88090	209	23
1A7030-88101	209	24
1A7030-88110	209	25
1A7030-88120	209	26
1A7030-88130	209	27
1A7030-88140	209	28
1A7030-88150	209	29
1A7030-88160	209	30
1A7030-88170	209	31
1A7030-88180	209	4
1A7030-88190	209	5
1A7030-88200	209	6
1A7030-88210	208	9
1A7030-88230	209	7
1A7030-88250	209	32
1A7030-88650	208	27
1A7030-88680	210	18
1A7030-88710	207	11
		11 -1
	208	28
1A7030-88760	207	7 A
1A7030-88820	209	8
1A7030-88840	208	18
	209	9
1A7030-89860	207	18
	219	5
1A7030-89870	207	19
	219	6
1A7030-89930	207	20
	219	8
1A7030-89940	207	21

Parts No.	Fig. No.	Ref. No.
1A7030-89940	219	9
1A7030-89950	207	22
	219	10
1A7030-89960	207	23
	219	11
1A7030-89970	207	24
	219	12
1A7030-89980	207	25
	219	13
1A7140-00250	1	4
1A7140-00290	1	5
1A7140-00300	1	6
1A7140-00310	1	7
1A7140-00400	1	16
1A7140-00410	1	17
1A7140-00460	1	18
1A7140-00461	1	18 -1
1A7140-00600	3	1
	4	1
	292	1
1A7140-01500	3	8
	4	8
1A7140-01501	3	8 -1
	4	8 -1
	292	8
1A7140-03110	7	1 -1
1A7140-03111	7	1 -2
	223	1 -2
1A7140-04010	8	1
1A7140-04090	8	2
1A7140-04091	8	2 -1
1A7140-04200	9	1
1A7140-04300	9	2
1A7140-04700	10	3
	11	3
	224	1
1A7140-05100	3	10
	4	10
	292	12
1A7140-05510	12	1
1A7140-06201	3	11
	4	11
	292	17
1A7140-06300	3	13
	4	13
	292	19
1A7140-11100	13	5
1A7140-11101	13	5 -1
1A7140-11430	15	5
	226	5

Parts No. Index

Parts No.	Fig. No.	Ref. No.
1A7140-12310	19	1
1A7140-12610	19	9
1A7140-13300	22	1
1A7140-13520	23	1
1A7140-13560	23	2
1A7140-13570	23	3
1A7140-13620	25	1
1A7140-13640	25	3
1A7140-13670	128	1
1A7140-13710	25	13
1A7140-13720	25	14
1A7140-13770	25	16
1A7140-13771	25	16 -1
1A7140-13780	25	17
1A7140-13781	25	17 -1
1A7140-13870	26	3
1A7140-14610	22	2
1A7140-14700	28	1 -1
1A7140-14760	28	2 -1
		7 -1
	281	2 -1
		7 -1
1A7140-14800	28	6 -1
1A7140-17100	34	3
1A7140-17260	34	4
1A7140-17310	34	5
1A7140-17320	34	6
1A7140-17330	34	7
1A7140-17400	34	9
1A7140-17430	34	11
1A7140-17850	36	1
1A7140-17860	36	2
1A7140-24100	42	1
1A7140-24101	42	1 -1
1A7140-24102	42	1 -2
1A7140-25260	52	16
1A7140-25270	54	1
1A7140-25570	54	5
1A7140-26110	57	3
1A7140-26111	57	3 -1
1A7140-26120	57	5
1A7140-26121	57	5 -1
1A7140-26410	60	4
1A7140-26420	62	4
1A7140-28010	76	3
1A7140-28070	76	7
1A7140-31000	79	1
1A7140-31110	82	1
1A7140-31120	82	2
1A7140-33400	86	1

Parts No.	Fig. No.	Ref. No.
1A7140-33410	86	2
1A7140-34700	90	1
1A7140-34701	90	1 -1
1A7140-34760	90	2 -1
		5 -1
1A7140-34800	90	4
1A7140-34801	90	4 -1
1A7140-48390	113	3 -2
		3 -4
1A7140-49350	117	2
1A7140-49400	117	3
1A7140-50500	287	3
1A7140-50900	287	1
1A7140-51980	287	9
1A7140-58910	287	4
1A7140-58950	287	5
1A7140-58970	287	6
1A7140-59990	221	1
1A7140-60100	137	2
1A7140-60450	139	4
1A7140-60451	139	4 -1
	248	4
1A7140-60452	139	4 -2
	248	4 -1
1A7140-60800	139	5
1A7140-61100	140	11
1A7140-61130	140	12
1A7140-61140	140	13
1A7140-61430	141	2
1A7140-61450	141	3
1A7140-61520	150	39
1A7140-62490	151	8
1A7140-62491	151	8 -1
1A7140-62841	159	3
1A7140-63130	159	5
	260	4
	261	4
1A7140-63160	159	6
	260	5
	261	5
1A7140-63211	159	7
1A7140-63240	159	9
1A7140-63350	161	1
1A7140-64200	216	1
1A7140-65110	170	1
1A7140-65180	170	2
	171	2
	172	2
	173	2
1A7140-65190	170	3

Parts No.	Fig. No.	Ref. No.
1A7140-65190	171	3
	172	3
	173	3
1A7140-65930	167	14 -2
	168	15 -2
	264	14
1A7140-65932	167	14 -4
	168	15 -4
	264	14 -2
1A7140-71100	181	2
	300	2
1A7140-71101	181	2 -1
	300	2 -1
1A7140-71102	181	2 -2
	300	2 -2
1A7140-71600	181	4 -1
	300	4 -1
1A7140-71700	181	5 -1
	300	5 -1
1A7140-72300	182	2
1A7140-72301	182	2 -1
1A7140-72601	183	8 -1
1A7140-72602	183	8 -2
1A7140-72621	183	10
1A7140-72761	183	16 -1
1A7140-72762	183	16 -2
1A7140-72800	183	8
1A7140-72860	183	16
1A7140-73100	184	2
1A7140-73500	184	3
1A7140-74100	186	1
1A7140-74150	186	2
1A7140-74200	184	4
	270	4
1A7140-74210	184	6
	270	6
1A7140-74250	184	7
	270	7
1A7140-75700	220	1
1A7140-75750	220	6
	284	5
1A7140-75751	220	6 -1
	284	5 -1
1A7140-95950	215	1
	306	1
1A7150-34700	91	1
1A7150-34760	91	2
		5
1A7150-34800	91	4
1A7150-34900	91	3

Parts No.	Fig. No.	Ref. No.
1A7150-34900	91	6
1A7150-65110	171	1
1A7150-72600	183	8 -3
1A7150-85090	214	2
1A7160-03110	222	1
1A7160-04810	224	19
1A7160-10700	226	3
1A7160-10701	226	3 -1
1A7160-10702	226	3 -2
1A7160-10800	226	4
1A7160-10801	226	4 -1
1A7160-10802	226	4 -2
1A7160-11100	225	5
1A7160-11101	225	5 -1
1A7160-13300	227	1
1A7160-14610	227	2
1A7160-14620	227	3
1A7160-14700	29	1
1A7160-14710	276	1
1A7160-14750	229	1
1A7160-14760	229	5
		10
1A7160-14761	229	5 -1
		10 -1
1A7160-14800	29	6
1A7160-14810	276	6
1A7160-14850	229	6
1A7160-15320	230	4
1A7160-15500	230	2
1A7160-15501	230	2 -1
1A7160-17710	241	1
1A7160-18110	230	6
1A7160-21140	232	1
1A7160-21141	232	1 -1
1A7160-21142	232	1 -2
1A7160-24370	233	3
1A7160-31110	83	1
1A7160-31120	83	2
1A7160-33400	87	1
1A7160-33410	87	2
1A7160-33510	87	3
1A7160-34310	89	4
1A7160-34740	278	1 -1
1A7160-34840	278	12 -1
1A7160-37850	237	1
1A7160-42810	238	11
1A7160-47310	239	7
1A7160-48110	241	2
1A7160-48810	243	2
	285	2

Parts No. Index

Parts No.	Fig. No.	Ref. No.
1A7160-48830	226	7
1A7160-48840	226	8
1A7160-49350	244	2
1A7160-49400	244	3
1A7160-51160	245	7
1A7160-51180	245	13
1A7160-51260	245	7 -1
1A7160-51261	245	7 -2
1A7160-51262	245	7 -3
1A7160-51350	246	10
1A7160-51900	279	12
1A7160-51910	279	2
1A7160-52410	279	1
1A7160-52460	279	10
1A7160-52920	279	14
1A7160-52960	279	4
1A7160-53510	247	2
1A7160-60800	248	5
1A7160-61100	249	11
1A7160-61130	249	12
1A7160-61140	249	13
1A7160-61210	249	14
1A7160-61400	248	8
1A7160-61430	250	2
1A7160-61450	250	3
1A7160-61850	250	4
1A7160-62080	251	5
1A7160-62100	251	6
1A7160-62110	251	8
1A7160-62250	251	9
1A7160-62300	257	6
1A7160-62350	258	4
1A7160-62490	256	2
1A7160-62491	256	2 -1
1A7160-62492	256	2 -2
1A7160-62750	257	8
1A7160-62800	257	9
1A7160-62820	257	10
1A7160-62821	257	10 -1
1A7160-62841	260	2
	261	2
1A7160-62880	257	11
1A7160-62920	259	1
1A7160-62930	259	2
1A7160-63210	260	6
	261	8
1A7160-63240	261	7
1A7160-63300	255	11
1A7160-63330	234	5
1A7160-63340	239	10

Parts No.	Fig. No.	Ref. No.
1A7160-63470	255	18
1A7160-63520	239	6
1A7160-63530	255	12
1A7160-63600	254	2
1A7160-63610	252	1
	253	1
1A7160-64200	272	1
1A7160-65110	172	1
	265	1
1A7160-65180	265	2
	266	2
1A7160-65190	265	3
	266	3
1A7160-65730	264	9
1A7160-65900	279	7
		17
1A7160-65910	279	8
		18
1A7160-72300	268	2
1A7160-72602	269	8
1A7160-72603	269	8 -1
1A7160-72622	269	10
1A7160-72623	183	10 -1
	269	10 -1
1A7160-72760	269	16
1A7160-73100	270	2
1A7160-73500	270	3
1A7160-76110	243	3
1A7160-77380	183	25 -1
	269	25
1A7160-77500	183	34
	269	31
1A7160-85090	271	2
1A7160-85200	256	3
1A7160-85210	256	4
1A7170-14700	281	1 -1
1A7170-14800	281	6 -1
1A7170-25240	53	16
1A7170-34700	93	1
1A7170-34800	93	10
1A7170-34900	93	9
		18
1A7170-65110	173	1
	266	1
1A7170-72600	269	8 -2
1A7170-86570	204	6
	305	5
1A7170-86580	305	7
1A7170-86590	305	8
1A7170-87020	207	1 -2

Parts No.	Fig. No.	Ref. No.
1A7170-87021	207	1 -3
1A7170-87030	208	1
1A7170-87031	208	1 -1
1A7170-87920	207	5 -1
1A7170-87960	208	19
1A7170-88630	208	25 -1
1A7170-88640	208	26 -1
1A7180-00191	1	1
1A7180-00200	1	2
1A7180-01000	3	2
	4	2
	292	2
1A7180-01030	3	3
	4	3
	292	3
1A7180-01050	3	4
	4	4
	292	4
1A7180-01100	5	1
1A7180-01110	5	3
1A7180-01150	6	1
1A7180-01222	3	6
	4	6
	292	6
1A7180-01300	6	3
1A7180-01310	6	4
1A7180-01330	6	5
1A7180-01601	14	1
1A7180-01602	14	1 -1
1A7180-01700	14	2
1A7180-01750	14	3
1A7180-01800	3	35 -1
	4	37 -1
	292	9
1A7180-02160	5	22
1A7180-03110	7	1
	223	1
1A7180-03111	223	1 -1
1A7180-04800	154	2
	156	1
1A7180-04850	10	1 -2
	11	1 -2
1A7180-04950	3	9
	4	9
	292	11
1A7180-04960	10	4
	11	4
	224	2
1A7180-04970	10	5
	11	5

Parts No.	Fig. No.	Ref. No.
1A7180-04970	224	3
1A7180-05600	13	1
1A7180-05601	13	1 -1
1A7180-06220	3	12
	4	12
	292	18
1A7180-10410	15	1
	226	1
1A7180-10460	15	2
	226	2
1A7180-10702	15	3
1A7180-10802	15	4
1A7180-10830	13	2
	225	1
1A7180-10860	13	3
	225	3
1A7180-10870	13	4
	225	4
1A7180-11000	273	1
1A7180-11050	273	2
	280	1
1A7180-11600	18	1
1A7180-11620	18	1 A
1A7180-11630	18	1 B
1A7180-11650	18	2
1A7180-11700	18	3
1A7180-11720	18	3 B
1A7180-11802	15	6
1A7180-11803	15	6 -1
	226	6
1A7180-12710	19	16
1A7180-12720	19	17
1A7180-13101	20	1
1A7180-13150	20	2
1A7180-13201	21	1
1A7180-13211	21	2
1A7180-13250	21	9
1A7180-13260	21	10
1A7180-13270	21	11
1A7180-13380	20	3
1A7180-13390	20	4
1A7180-13400	20	5
1A7180-13410	20	6
1A7180-13420	20	7
1A7180-13610	24	1
1A7180-13630	25	2
1A7180-13790	27	1
1A7180-13820	26	1
1A7180-13830	26	2
1A7180-13840	27	2

Parts No. Index

Parts No.	Fig. No.	Ref. No.
1A7180-13880	26	4
1A7180-14110	27	3
1A7180-14620	22	3
1A7180-14621	22	3 -1
1A7180-14630	22	4
	227	4
1A7180-15321	31	4
1A7180-15350	32	1
1A7180-15410	31	1
	230	1
1A7180-15501	31	2
1A7180-15502	31	2 -1
1A7180-15601	31	5
	230	5
1A7180-15602	31	5 -1
	230	5 -1
1A7180-15690	32	3
1A7180-15710	31	18
	230	18
1A7180-15750	31	19
	230	19
1A7180-17350	34	8
1A7180-17500	35	1
1A7180-17601	35	2
1A7180-17602	35	2 -1
1A7180-17710	111	1
	112	1
1A7180-18110	31	6
1A7180-18210	31	7
	230	7
1A7180-18250	31	8
	230	8
1A7180-21112	39	2
	40	2
1A7180-21130	39	3
	40	3
1A7180-21140	37	1
1A7180-21141	37	1 -1
1A7180-21142	37	1 -2
1A7180-21150	39	4
	40	4
1A7180-21161	39	5
	40	5
1A7180-21200	52	1
	53	1
1A7180-21210	52	2
	53	2
1A7180-21211	52	2 -1
	53	2 -1
1A7180-21220	52	3

Parts No.	Fig. No.	Ref. No.
1A7180-21220	53	3
	77	6
1A7180-21230	52	4
	53	4
	57	4
	77	7
1A7180-21240	52	5
	53	5
	77	8
1A7180-21250	52	6
	53	6
	77	9
1A7180-21260	37	1 A
1A7180-22400	98	4
1A7180-22410	98	5
1A7180-22510	44	35
1A7180-22520	99	1
1A7180-24050	46	1
1A7180-24051	46	1 -1
1A7180-24141	44	36
1A7180-24170	42	5
1A7180-24200	41	2
1A7180-24230	41	3
1A7180-24240	46	2
1A7180-24241	46	2 -1
1A7180-24250	46	4
1A7180-24260	45	1
	233	1
1A7180-24290	46	5
1A7180-24291	46	5 -1
1A7180-24310	43	1
1A7180-24350	45	2
	233	2
1A7180-24370	45	3
1A7180-24410	45	4
	233	4
1A7180-24450	48	1
1A7180-24470	48	2
1A7180-24541	45	5
	233	5
1A7180-24550	45	6
	233	6
1A7180-24560	45	7
	233	7
1A7180-24580	45	8
	233	8
1A7180-24590	42	8
1A7180-24600	187	1
1A7180-24621	45	9
	233	9

Parts No.	Fig. No.	Ref. No.
1A7180-24680	45	10
	233	10
1A7180-24700	45	11
	233	11
1A7180-24750	45	12
	233	12
1A7180-24830	46	7
1A7180-24850	46	8
1A7180-24851	46	8 -1
1A7180-24912	45	13
	233	13
1A7180-25100	49	2
1A7180-25110	49	3
1A7180-25120	51	1
1A7180-25150	51	2
1A7180-25210	52	14
	53	13
1A7180-25220	52	15
	53	14
1A7180-25230	53	15
1A7180-25250	56	2
1A7180-25260	56	3
	64	2
1A7180-25270	56	4
1A7180-25300	52	17
	53	17
1A7180-25301	52	17 -1
	53	17 -1
1A7180-25430	50	1
1A7180-25450	50	2
1A7180-25530	55	2
1A7180-25540	54	3
	55	3
1A7180-25570	55	5
1A7180-25870	15	13
	226	16
1A7180-26000	57	1
1A7180-26001	57	1 -1
1A7180-26010	57	2
1A7180-26130	57	6
1A7180-26140	52	4 -1
	53	4 -1
	57	4 -1
	77	7 -1
1A7180-26210	58	2
1A7180-26220	58	3
1A7180-26230	58	4
1A7180-26240	58	5
1A7180-26241	58	5 -1
1A7180-26250	57	18

Parts No.	Fig. No.	Ref. No.
1A7180-26270	41	5
1A7180-26310	64	4
1A7180-26350	58	6
1A7180-26380	60	3
	61	3
1A7180-26390	62	3
	63	3
1A7180-26410	61	4
1A7180-26420	63	4
1A7180-26500	59	11
1A7180-26510	59	12
1A7180-26520	59	13
1A7180-26530	59	14
1A7180-26540	59	15
1A7180-26550	59	16
1A7180-26840	47	21
1A7180-26900	66	1
1A7180-27010	69	1
1A7180-27050	68	1
1A7180-27090	69	2
1A7180-27110	150	2
	255	2
1A7180-27130	69	3
1A7180-27131	69	3 -1
1A7180-27150	68	3
1A7180-27180	69	4
1A7180-27190	68	4
1A7180-27200	150	20
	255	13
1A7180-27250	67	1
1A7180-27290	150	4
	255	4
1A7180-27310	150	21
	255	14
1A7180-27380	69	5
1A7180-27390	69	6
1A7180-27410	69	7
1A7180-27450	69	8
1A7180-27600	71	1
1A7180-27610	160	4
1A7180-27630	68	7
1A7180-27701	72	1
1A7180-27710	72	3
1A7180-27761	72	4
1A7180-27771	72	5
1A7180-27800	72	7
1A7180-27850	72	10
1A7180-27851	72	10 -1
1A7180-27870	72	13
1A7180-27871	72	13 -1

Parts No. Index

Parts No.	Fig. No.	Ref. No.
1A7180-27880	69	11
1A7180-27900	72	12 -1
1A7180-27910	72	8
1A7180-27920	72	18
1A7180-27930	72	21
1A7180-28020	76	4
1A7180-28030	77	3
1A7180-28040	77	4
1A7180-28050	76	5
1A7180-28060	76	6
1A7180-28110	77	5
1A7180-28120	77	14
1A7180-28121	77	14 -1
1A7180-28130	77	15
1A7180-28140	77	16
1A7180-28150	77	17
1A7180-28300	77	19
1A7180-31200	81	1
1A7180-33110	84	2
1A7180-33140	84	4
1A7180-33141	84	4 -1
1A7180-33150	85	2
1A7180-33190	308	2
1A7180-33240	308	1
1A7180-33250	308	3
1A7180-36100	96	2
1A7180-36110	96	3
1A7180-36120	96	4
1A7180-36130	96	5
1A7180-36160	96	6
1A7180-36201	96	7
1A7180-36211	96	8
1A7180-36240	96	9
1A7180-36820	97	2
1A7180-36840	97	3 -1
1A7180-36850	97	4
1A7180-37201	98	3
1A7180-37202	98	3 -1
1A7180-37203	98	3 -2
1A7180-37300	98	10 -1
1A7180-37310	98	15 C
1A7180-37410	98	16
1A7180-37411	98	16 -1
1A7180-37420	98	19
1A7180-37421	98	19 -1
1A7180-37550	98	23
1A7180-37551	98	23 -1
1A7180-37650	98	28 -2
1A7180-37701	99	2
1A7180-37711	99	5

Parts No.	Fig. No.	Ref. No.
1A7180-37721	99	3
1A7180-37731	99	6
1A7180-37800	99	8
1A7180-37850	100	1
1A7180-37910	99	9
1A7180-41100	101	1
1A7180-41300	101	2
1A7180-42101	102	1
	238	1
1A7180-42102	102	1 -1
	238	1 -1
1A7180-42150	102	5
	238	5
1A7180-42230	102	6
	238	6
1A7180-42250	102	7
	238	7
1A7180-42280	102	8
1A7180-42281	102	8 -1
	238	8
1A7180-42300	102	9
	238	9
1A7180-42320	102	70
	238	69
1A7180-42850	102	11
1A7180-42851	102	11 -1
1A7180-42860	102	12
1A7180-42861	102	12 -1
1A7180-43100	102	14
	238	13
1A7180-43200	102	13
	238	12
1A7180-43280	103	1
1A7180-43290	103	4
1A7180-43300	102	16
	238	15
1A7180-43340	102	17
	238	16
1A7180-43410	104	7
1A7180-43610	102	18
	238	17
1A7180-43710	102	19
	238	18
1A7180-43900	102	13 -3
	238	12 -3
1A7180-43930	102	20
	113	8
		8 -2
	238	19
1A7180-44110	104	8

Parts No.	Fig. No.	Ref. No.
1A7180-44210	104	1
1A7180-44311	104	6
1A7180-44410	104	11
1A7180-44510	104	12
1A7180-45110	105	2
1A7180-45150	102	21
	238	20
1A7180-45170	102	22
	238	21
1A7180-45180	102	23
	238	22
1A7180-45190	102	24
		44
	238	23
		43
1A7180-45700	106	1
1A7180-46610	102	27
	238	26
1A7180-46701	102	28
	238	27
1A7180-47310	150	13
1A7180-48110	111	2
	112	2
1A7180-48131	113	1
1A7180-48170	113	2
1A7180-48191	111	3
	112	3
	241	3
1A7180-48210	111	4
	112	4
	241	4
1A7180-48250	45	14
	233	14
1A7180-48251	45	14 -1
	233	14 -1
1A7180-48310	113	1 -1
1A7180-48340	114	2
	242	2
1A7180-48350	114	3
	242	3
1A7180-48351	114	3 -1
	242	3 -1
1A7180-48352	114	3 -2
	242	3 -2
1A7180-48360	113	3 -1
1A7180-48390	113	3 -3
1A7180-48460	114	4
1A7180-48500	112	5
1A7180-48550	112	6
1A7180-48790	115	2

Parts No.	Fig. No.	Ref. No.
1A7180-48790	116	2
1A7180-49190	115	4
	116	4
1A7180-49260	117	1
	244	1
1A7180-51020	118	5
	119	6
	245	6
	293	5
1A7180-51040	120	5
	246	5
1A7180-51111	120	6
	246	6
1A7180-51140	122	1
1A7180-51161	118	6
1A7180-51180	118	12
	119	13
	293	6
1A7180-51250	118	6 A
	119	7 A
	245	7 A
	293	8
1A7180-51260	118	6 -1
1A7180-51261	118	6 -2
1A7180-51262	118	6 -3
1A7180-51310	120	9
	246	9
1A7180-51350	120	10
1A7180-51560	124	3
1A7180-51660	113	11
		11 -1
1A7180-51950	307	1
1A7180-51960	309	1
1A7180-51980	118	24
		24 -1
	119	22
		22 -1
	245	21
		21 -1
	309	4
1A7180-51990	309	5
1A7180-52050	25	4
	46	9
1A7180-52110	126	25
1A7180-52140	126	7
	127	5
1A7180-52180	126	10 -1
	127	8 -1
1A7180-52190	125	1
1A7180-52210	126	11

Parts No. Index

Parts No.	Fig. No.	Ref. No.
1A7180-52210	127	9
1A7180-52240	126	15
	127	13
1A7180-52310	126	18
	127	16
1A7180-52500	25	5
1A7180-52610	75	1
		2
1A7180-52810	74	3
	187	6
	234	4
1A7180-52920	109	5
	239	5
1A7180-53050	132	12
1A7180-53400	154	5
1A7180-53510	133	1
1A7180-56600	8	5
1A7180-58010	118	18
1A7180-60290	137	3
	138	3
1A7180-60350	139	2
	248	2
1A7180-60371	139	3
	248	3
1A7180-60601	140	5
	249	5
1A7180-60650	115	6
1A7180-60750	140	6
	249	6
1A7180-60760	155	2
	258	2
1A7180-60890	120	13
	246	13
1A7180-60901	139	6
	248	6
1A7180-61050	140	8
	249	8
1A7180-61070	140	9
	249	9
1A7180-61080	140	10
	249	10
1A7180-61250	3	27
	4	29
	292	35
1A7180-61400	139	8
1A7180-61410	140	15
	249	16
1A7180-61490	142	3
1A7180-61510	142	4
	143	4

Parts No.	Fig. No.	Ref. No.
1A7180-61530	145	2
1A7180-61540	144	2
1A7180-61550	140	16
	249	17
1A7180-61590	142	5
1A7180-61611	98	24
1A7180-61730	98	30
1A7180-61780	132	17
	140	17
		18
		19
	166	2
	249	18
		19
		20
1A7180-61790	150	7
	255	7
1A7180-61810	140	20
	249	21
1A7180-61850	141	4
1A7180-61941	141	6
	250	6
1A7180-62080	146	8
	147	8
1A7180-62110	151	5
1A7180-62111	151	5 -1
1A7180-62130	146	9
	147	9
1A7180-62140	146	10
	147	10
1A7180-62150	151	7
1A7180-62151	151	7 -1
1A7180-62300	154	12
	156	9
1A7180-62310	154	13
	156	10
1A7180-62350	155	4
	157	1
	294	1
1A7180-62360	154	6
	156	3
1A7180-62841	160	6
1A7180-62920	158	1
1A7180-62930	158	2
1A7180-62980	152	6
1A7180-63110	159	4
	160	7
	260	3
	261	3
1A7180-63150	150	9

Parts No.	Fig. No.	Ref. No.
1A7180-63150	255	8
1A7180-63200	160	15
1A7180-63271	150	10
	255	9
1A7180-63280	150	11
	255	10
1A7180-63300	150	16
1A7180-63400	150	24
	255	17
1A7180-63470	150	25
1A7180-63520	150	12
1A7180-63530	150	19
1A7180-63550	150	32
1A7180-63600	149	2
1A7180-63610	148	2
1A7180-63680	146	12
	147	12
1A7180-63860	164	2
	165	2
	262	4
1A7180-63870	164	3
	165	3
1A7180-65010	166	3
1A7180-65020	166	4
1A7180-65030	166	5
1A7180-65050	166	3 -1
1A7180-65060	166	5 -1
1A7180-65310	178	1
	179	1
1A7180-65520	167	2
	168	3
	264	2
1A7180-65551	169	1
1A7180-65552	169	1 -1
1A7180-65620	180	1
1A7180-65640	167	3
	168	4
	264	3
1A7180-65650	167	4
	168	5
	264	4
1A7180-65660	176	1
1A7180-65670	167	5
	168	6
	264	5
1A7180-65680	167	6
	168	7
	264	6
1A7180-65720	167	8
	264	8

Parts No.	Fig. No.	Ref. No.
1A7180-65730	167	9
	168	10
1A7180-65740	167	10
	168	11
	264	10
1A7180-65780	167	11
	168	12
	264	11
1A7180-65933	167	14
	168	15
1A7180-65934	167	14 -1
	168	15 -1
1A7180-71400	181	14
	300	16
1A7180-72450	182	4
	183	6
	268	4
1A7180-72451	182	4 -1
	183	6 -1
	268	4 -1
	269	6
1A7180-72550	182	5
	183	7
	268	5
	269	7
1A7180-73150	185	1
1A7180-73160	185	2
1A7180-73170	185	3
1A7180-73171	185	3 -1
1A7180-77210	102	29
	238	28
1A7180-77220	102	30
	238	29
1A7180-77221	102	30 -2
	238	29 -2
1A7180-77230	102	31
	238	30
1A7180-77240	102	32
	238	31
1A7180-77260	102	33
	238	32
1A7180-77270	102	34
		34 -1
	238	33
		33 -1
1A7180-77280	102	35
	238	34
1A7180-77290	102	36
	238	35
1A7180-77300	102	37

Parts No. Index

Parts No.	Fig. No.	Ref. No.
1A7180-77300	238	36
1A7180-77310	102	38
	238	37
1A7180-77320	102	39
	238	38
1A7180-77330	102	40
	238	39
1A7180-77350	102	41
	238	40
1A7180-77380	183	25 -2
	269	25 -1
1A7180-77390	183	31
	269	30
1A7180-77420	102	42
	238	41
1A7180-77430	102	43
	238	42
1A7180-77500	183	32
	269	33
1A7180-78190	189	4
1A7180-78200	189	9
1A7180-78210	189	10
1A7180-78260	189	12
1A7180-78280	187	2
1A7180-78530	189	13
1A7180-78610	126	21
	127	19
1A7180-78740	286	2 -1
	309	9
1A7180-78770	286	2
1A7180-78800	187	3
1A7180-78801	187	3 -1
1A7180-78810	187	7
1A7180-78811	187	7 -1
1A7180-78880	189	16
1A7180-78900	187	8
1A7180-78910	187	9
1A7180-78970	187	11
1A7180-84600	196	10
1A7180-86690	118	21
	245	18
1A7180-92100	163	2
	295	2
1A7180-93100	274	1
1A7180-93110	274	2
1A7185-10700	15	3 -1
1A7185-10701	15	3 -2
1A7185-10800	15	4 -1
1A7185-10801	15	4 -2
1A7185-11800	15	6 -2

Parts No.	Fig. No.	Ref. No.
1A7185-11800	226	6 -1
1A7185-43100	102	14 -1
	238	13 -1
1A7185-43200	102	13 -4
	238	12 -4
1A7185-43201	102	13 -5
	238	12 -5
1A7185-43970	102	54 E
	238	53 E
1A7185-50300	188	1 -3
1A7185-50301	188	1 -4
1A7185-51110	120	6 -1
1A7185-51140	122	1 -1
1A7185-51250	307	2
1A7185-65740	307	3
1A7185-77420	102	42 -1
	238	41 -1
1A7185-77430	102	43 -1
	238	42 -1
1A7185-77440	102	54 A
	238	53 A
1A7185-77610	102	31 -1
		31 -2
		54 G
	238	30 -1
		30 -2
		53 G
1A7185-77620	102	38 -2
		38 -3
		54 H
	238	37 -2
		37 -3
		53 H
1A7185-77630	102	54 B
	238	53 B
1A7185-77640	102	54 C
	238	53 C
1A7185-77650	102	54 D
	238	53 D
1A7185-77660	102	33 -1
	238	32 -1
1A7185-77680	102	32 -1
	238	31 -1
1A7185-92100	163	2 -1
1A7190-27600	70	1
1A7190-72620	183	10 -2
	269	10 -2
1A7190-85090	213	2
1A7210-00230	1	3
1A7210-00450	1	8

Parts No.	Fig. No.	Ref. No.
1A7210-02801	211	1
1A7210-02831	211	2
1A7210-02832	211	2 -1
1A7210-02833	211	2 -2
1A7210-02850	211	3
1A7210-04700	3	44
	292	10
1A7210-17860	36	1 -1
1A7210-21301	40	6
1A7210-21311	40	7
1A7210-51050	121	1
1A7210-51162	119	7
1A7210-51190	202	1
1A7210-51200	121	2
1A7210-51260	119	7 -1
1A7210-51261	119	7 -2
1A7210-51262	119	7 -3
	293	7
1A7210-52100	127	23
1A7210-60102	138	2
1A7210-60251	211	8
1A7210-60271	211	9
1A7210-61490	143	3
1A7210-62560	155	5
	157	2
	258	5
	294	2
1A7210-65720	168	9
1A7210-80090	190	4
1A7210-80091	190	4 -1
1A7210-81190-1	210	6 -1
1A7210-81240	195	3
1A7210-81260	195	4
1A7210-81300	195	5
1A7210-82100	191	3
1A7210-82110	191	4
1A7210-82320	191	14
1A7210-82610	191	33
1A7210-82850	127	28
1A7210-82870	127	33
1A7210-83110	192	1
1A7210-83150	192	2
1A7210-83160	192	3
1A7210-83200	192	5
1A7210-83210	192	6
1A7210-83410	193	21
1A7210-83430	193	22
1A7210-83610	194	11
	301	10
1A7210-84100	195	7

Parts No.	Fig. No.	Ref. No.
1A7210-84101	195	7 -1
	302	4
1A7210-84120	195	8
	302	5
1A7210-84150	195	10
	302	7
1A7210-84160	195	11
	302	8
1A7210-84170	196	2
1A7210-84180	195	12
	302	9
1A7210-84190	195	13
	302	10
1A7210-84220	154	7 -1
	156	4 -1
	195	2 -1
	302	13
1A7210-84260	196	4
1A7210-84270	197	3
1A7210-84310	157	5
	294	5
1A7210-84320	157	6
	294	6
1A7210-84330	157	7
	294	7
1A7210-84410	196	7
1A7210-84510	196	8
1A7210-84521	196	9
1A7210-84611	195	16
	302	14
1A7210-84621	195	17
	302	15
1A7210-84680	196	11
1A7210-84711	156	12
1A7210-84712	156	12 -1
1A7210-84730	196	12
1A7210-84740	196	14
1A7210-84750	196	16
1A7210-84760	196	17
1A7210-84770	196	18
1A7210-84780	196	19
1A7210-84790	196	20
1A7210-84810	157	8
1A7210-84830	196	23
1A7210-84840	196	24
1A7210-84870	156	13
1A7210-84880	156	14
1A7210-84910	196	25
1A7210-85360	195	22
	302	20

Parts No. Index

Parts No.	Fig. No.	Ref. No.
1A7210-85370	195	23
1A7210-85371	195	23 -1
	302	21
1A7210-85450	198	6
1A7210-85460	198	7
1A7210-85470	195	24
	302	22
1A7210-85490	195	25
	302	23
1A7210-85500	198	8
1A7210-85700	198	13
1A7210-85720	198	14
1A7210-85750	198	15
1A7210-85751	198	15 -1
1A7210-85760	198	16
1A7210-85761	198	16 -1
1A7210-85780	198	22
		22 -1
1A7210-85810	199	4
1A7210-86080	204	5
	305	3
1A7210-86300	205	1
1A7210-86310	205	2
1A7210-86430	201	5
	304	5
1A7210-86530	201	6
1A7210-86610	202	5
1A7210-86680	202	6
1A7210-87020	207	1
1A7210-87021	207	1 -1
1A7210-87140	211	15
1A7210-87450	210	12
1A7210-87460	198	17
1A7210-87470	198	18
1A7210-87480	198	19
1A7210-87890	212	20 -1
1A7210-87920	207	5
1A7210-87931	207	6
1A7210-87950	207	7
1A7210-87951	207	7 -1
1A7210-87970	207	8
1A7210-88610	207	9
1A7210-88620	207	10
1A7210-88621	207	10 -1
1A7210-88630	208	25
1A7210-88640	208	26
1A7210-88700	211	16
1A7210-88900	211	17
1A7210-93100	275	1
1A7210-93101	275	1 -1

Parts No.	Fig. No.	Ref. No.
1A7210-93110	275	2
1A7210-93111	275	2 -1
1A7210-93130	289	3
	299	2
1A7260-01210	3	5
	4	5
	292	5
1A7260-01220	3	7
	4	7
	292	7
1A7260-37310-1	98	10
1A7260-37650	98	28
1A7260-37651	98	28 -1
1A7260-43810	97	6
1A7260-45100-1	105	1
1A7260-46640	108	1
1A7260-46650	108	2
1A7260-53220	132	5
		10
1A7260-60860	3	26
	4	28
	292	31
1A7260-60890	140	7
	249	7
1A7260-62310	155	3
	258	3
1A7260-63841	263	3
	272	3
1A7260-63851	262	3
	263	4
1A7260-64080	165	4
	216	2
1A7260-64180	164	5
	165	6
1A7260-64450	257	18
1A7260-72711	183	13
	269	13
1A7260-72730	183	14
	269	14
1A7260-72750	183	15
	269	15
1A7260-78150	189	3
	286	1
		1 -1
1A7260-78700	286	6
		6 -1
	309	7
1A7260-85510	213	6
	214	6
1A7280-65910	177	1

Parts No.	Fig. No.	Ref. No.
1A7280-81110	16	1
1A7290-81110	17	1
1A7300-34720	283	1
1A7300-34740	278	1
1A7300-34750	278	2
		13
	283	2
		13
1A7300-34820	283	12
1A7300-34840	278	12
1A7300-34890	278	8
		19
	283	8
		19
1A7320-61140	203	1
1A7320-64510	199	3
1A7320-64860	168	1
1A7320-71710	181	10
	300	10
1A7320-82750	191	48
1A7320-82760	191	50
1A7320-82770	191	52
1A7320-83640	194	15
	301	16
1A7320-83790	194	21
1A7320-83791	194	21 -1
	301	25
1A7320-84730	196	13
1A7320-84740	196	15
1A7320-86640	204	10
	305	12
1A7320-86650	204	9
	305	11
1A7320-87892	207	14
1A7320-87902	207	13
1A7320-87922	207	16
	219	3
1A7320-87990	207	17
	219	4
1A7320-88970	210	19
1A7320-89892	219	7
1A7320-89902	219	1
1A7351-25830	52	7
	53	7
	77	10
1A7351-26730	57	7
1A7351-26740	57	8
1A7351-26750	57	9
1A7351-26760	52	8
	53	8

Parts No.	Fig. No.	Ref. No.
1A7351-26760	57	10
1A7351-26770	52	9
	53	9
	57	11
	77	11
1A7351-26780	57	12
1A7351-26790	52	10
	53	10
	57	13
	77	12
1A7351-26800	57	14
1A7351-31450	80	1
1A7360-25640	55	6
1A7390-23140	44	19
1A7400-24550	52	13
1A7400-53110	131	1
1A7400-53120	131	9
1A7400-53530	131	4
		12
1A7400-53560	131	5
		13
1A7400-53570	131	6
1A7400-53580	131	14
1A7400-53590	131	7
1A7400-53600	131	15
1A7400-53610	131	8
1A7400-53620	131	16
1A7410-87580	207	3
1A7410-87630	207	4
1A7450-03170	141	1 -1
	154	1
	250	1
1A7450-24170	41	1
	42	6
1A7450-52210	126	12
	127	10
1A7450-52230	126	13
	127	11
1A7450-52291	126	17
	127	15
1A7450-52450	126	19
	127	17
1A7470-82400	191	16
1A7470-82410	127	24
		29
	191	17
1A7470-82420	127	25
		30
	191	18
1A7470-82440	191	22

Parts No. Index

Parts No.	Fig. No.	Ref. No.
1A7470-82450	191	23
1A7470-82471	191	24
1A7470-82481	191	25
1A7470-82510	191	27
1A7470-82520	191	28
1A7470-82560	191	30
1A7470-82570	191	31
1A7470-82580	127	26
		31
	191	19
1A7470-82640	191	36
1A7470-82650	191	39
1A7470-82660	191	42
1A7470-82670	191	43
1A7470-82680	191	44
1A7470-82720	191	46
1A7470-82730	191	47
1A7470-82750	191	49
1A7470-82760	191	51
1A7470-82800	191	53
1A7470-82810	191	55
1A7470-82820	191	58
1A7470-82880	191	20
1A7470-82890	127	27
		32
	191	21
1A7470-82900	191	56
1A7470-82950	191	59
1A7470-83250	192	4
1A7470-86250	200	3
	303	3
1A7470-86270	200	4
		6
	303	4
1A7470-86350	200	5
1A7470-87110	211	14
1A7470-87120	207	12
1A7470-88280	209	33
1A7470-88420	208	24
1A7471-87900	207	13 -1
1A7471-87920	207	16 -1
	219	3 -1
1A7471-89900	219	1 -1
1A7480-01201	6	2
1A7480-52180	126	10
	127	8
1A7480-52340	74	2
	234	3
1A7510-62100	251	7
1A7530-28280	52	20

Parts No.	Fig. No.	Ref. No.
1A7530-28280	53	20
1A7591-52410	118	17
1A7591-52520	126	20
	127	18
	201	2
	304	2
1A7591-86330	206	5
1A7600-52223	126	14
	127	12
1A7600-52224	126	14 -1
	127	12 -1
1A7600-63151	160	8
1A7600-63160	160	9
1A7600-63190	160	12
1A7600-63210	160	13
1A7601-53920	3	26 -1
	4	28 -1
	292	31 -1
1A7601-63860	263	5
	272	4
1A7601-63870	262	5
	263	6
1A7601-64810	163	1 -1
	295	1 -1
1A7601-65250	170	4
	171	4
	172	4
	173	4
	265	4
	266	4
1A7610-18380	31	9
	230	9
1A7610-52170	10	8
	11	8
	224	6
1A7640-44230	104	2
1A7640-44240	104	3
1A7640-63170	160	10
1A7640-63180	160	11
1A7640-63190	160	14 A
1A7640-63220	159	8
	160	16
	260	7
	261	6
1A7640-78980	44	37
1A7690-01230	5	26
1A7710-15540	32	2
1A7710-87940	208	17
1A7740-65860	167	13 -1
	168	14 -1

Parts No.	Fig. No.	Ref. No.
1A7740-65860	264	13 -1
1A7805-04170	211	50
1A7805-50900	287	11
1A7805-52420	302	2
1A7850-52110	127	3
1A7850-52130	127	4
1A7870-24910	102	10 -1
	238	10 -1
1A7870-52950	129	1 -1
1A7870-78110	286	11
	309	6
1A7880-04270	10	2
	11	2
1A7880-27570	96	1
1A7882-85630	290	7
	291	7
	297	5
1A7890-01350	5	5
1A7890-01360	5	7
1A7890-01380	5	10
1A7890-01410	5	8
1A7890-01460	5	9
1A7890-53420	131	2
		10
1A7890-57200	130	1
1A7890-60980	139	7
	248	7
1A7890-65611	169	2
1A7890-65790	169	3
1A7900-17840	34	14
1A7900-34900	90	3
		6
1A7930-34750	277	1
1A7930-34760	93	2
		11
	277	2
		13
1A7930-34820	93	8
		17
	277	8
		19
1A7930-34850	277	12
1A7940-27870	71	3
1A7951-86550	202	2
1A7951-86560	202	3
1A7951-86570	202	4
1A8070-53010	132	2
1A8070-53020	132	7
1A8070-53030	132	4
1A8070-53040	132	9

Parts No.	Fig. No.	Ref. No.
1A8070-61330	140	14
	166	1
	249	15
1A8070-63640	146	11
	147	11
1A8100-53380	131	19
1A8110-62250	193	31 -1
	194	23 -1
	301	4
1A8110-62990	152	7
	153	7
1A8110-82201	191	6
1A8110-82221	191	7
1A8110-82241	191	9
1A8110-82250	191	10
1A8110-82650	193	6 -1
	194	10 -1
		28
		28 -1
	301	6
		14
1A8110-82660	193	36
	194	29
		30
		30 -1
	301	7
		30
1A8110-82670	191	37 -1
		38 -1
	193	3 -1
	194	7 -1
		8 -1
	301	8
		9
		31
1A8110-83280	193	5
1A8110-83350	193	7
1A8110-83360	193	14
1A8110-83450	193	23
1A8110-83460	193	9
1A8110-83470	193	16
1A8110-83510	193	10
1A8110-83520	193	17
1A8110-83570	193	24
1A8110-83730	191	1 -1
	193	2 -1
	194	5 -1
		6 -1
		9 -1
	289	2

Parts No. Index

Parts No.	Fig. No.	Ref. No.
1A8110-83730	299	1
	301	20
		21
		22
		32
1A8110-84210	195	14
		15
	210	7
	302	11
		12
1A8110-84280	196	5
1A8110-84300	196	6
1A8110-85860	199	5
1A8110-86330	205	3
1A8110-86340	205	4
1A8110-86350	205	5
1A8110-86360	205	6
1A8110-86370	205	7
1A8110-86400	205	13
1A8110-86410	205	14
1A8110-86420	205	15
1A8110-86450	205	8
1A8110-86460	205	9
1A8110-86470	205	10
1A8110-86480	205	11
1A8110-86490	205	12
1A8110-86910	206	11
1A8110-86920	206	12
1A8110-87210	207	2
1A8131-93111	288	3
	298	2
1A8160-63400	161	2
	162	1
1A8160-63410	161	3
	162	2
1A8160-63420	161	4
	162	3
1A8160-63440	162	4
1A8160-65800	290	4
1A8280-50102	74	1
1A8280-50103	74	1 -1
	234	2
1A8280-50104	74	1 -2
1A8280-50105	74	1 -3
	234	2 -2
1A8280-50106	74	1 -4
	234	2 -3
1A8280-50107	74	1 -5
	234	2 -4
1A8280-50108	74	1 -6

Parts No.	Fig. No.	Ref. No.
1A8280-50108	234	2 -5
1A8280-50302	188	1
1A8280-50303	188	1 -1
1A8280-50304	188	1 -2
1A8280-50900	74	6
	188	17
	234	9
1A8280-53200	132	13
1A8280-53220	132	14
		16
1A8280-53300	132	15
1A8280-53320	131	18
1A8280-53400	131	17
1A8280-56011	134	1
1A8280-56012	134	1 -1
1A8280-56110	134	4
1A8280-56180	134	5
1A8280-78311	188	2
1A8280-78410	188	4
1A8280-78420	188	5
1A8280-78430	188	6
1A8280-78440	188	7
1A8280-78450	188	8
1A8280-78460	188	9
1A8280-78470	188	10
1A8280-78490	188	11
1A8280-78510	188	12
1A8280-78520	188	13
1A8343-65210	290	6
	291	6
	296	1
1A8343-65800	291	4
	297	3
1C1011-33990	191	8
1C6053-26020	151	3
	191	70 -1
	256	1
1C6053-32020	120	4
	246	4
1C6215-81681	66	2
1C6281-52310	183	3
	194	1
	269	3
	301	2
1C6281-52320	73	1
	99	10
1C6410-22850	44	18
1C6650-13030	56	1
	64	1
1C6660-94100	195	31

Parts No.	Fig. No.	Ref. No.
1C6660-94100	302	26
1C6780-37180	251	3
1C6860-08160	132	3
		8
1C6900-06180	120	7
	246	7
1C6900-07200	126	1
	127	1
1C6900-23120	25	19
1C6900-23150	25	20
1C7100-08150	135	1
1C7100-08151	135	1 -1
1C7100-15100	25	18
1C7121-42000	231	1
1C7121-42050	231	2
1C7200-07101	286	9
	309	2
1D2310-68550	113	3 A
		3 A-1
1D4180-17300	126	2
	127	2
1D4180-22850	113	4 -1
1D4220-16250	120	1
	246	1
1D4270-17650	201	1
	304	1
1E5120-86720	180	5
1E5120-86780	180	6
1E6102-83230	99	11
	120	16
	139	19
	246	16
	248	19
1E6190-54080	49	6
1E6190-55660	42	12
1E6190-55710	42	13
1E6213-83410	66	3
1E6480-56410	42	14
1E6680-81130	133	3
	247	4
1E6760-74150	154	14
	156	11
1E8050-05510	118	20 -1
	119	1
1E8450-81370	201	3
	304	3
1E8500-97200	180	7
1E8500-97220	180	8
1E8540-54130	52	22
	53	22

Parts No.	Fig. No.	Ref. No.
1E8545-80080	208	2
		6
1E8945-85480	120	17
	246	17
1E9000-82000	133	2
	247	3
1E9000-82010	133	4
	247	5
1E9000-82020	133	5
	247	6
1E9170-81270	131	20
1K1140-82500	118	19
	119	17
	245	17
		17 -1
	293	17
22117-080000	99	17
22117-120000	25	6
	44	34 A
22117-200000	31	10
	230	10
22137-050000	189	17
22137-060000	5	18
	6	8
	14	6
	183	28
	212	15
	269	28
22137-080000	44	20
	99	12
		12 -1
		17 -1
	139	10
	163	5
	193	32
	194	24
	248	10
	273	3
	274	3
	275	3
	280	2
	295	3
	300	12
	301	27
22137-100000	5	23
	25	37
		37 -1
	115	8
	116	7
	150	26

Parts No. Index

Parts No.	Fig. No.	Ref. No.
22137-100000	161	5
	162	5
	211	24
	213	9
	214	9
	217	21
	255	19
	271	8
22137-120000	39	6
	40	8
	98	32
	193	11
		18
	199	6
	262	8
	263	9
	272	7
22137-160000	33	3
22137-200000	84	5
22157-060000	5	19
	31	24
	39	7
	98	37
	115	9
	146	13
	147	13
	189	23
	210	21
	211	25
		26
	212	16
	230	26
	251	13
	286	8
		8 -1
	309	10
22157-080000	47	20 B
	66	4
	98	15 D
	150	33
	181	12
	300	13
22157-100000	139	11
	217	22
	248	11
22190-050000	8	7
22190-060000	44	34 B
22190-080000	8	8
	46	23
	68	8

Parts No.	Fig. No.	Ref. No.
22190-080000	69	12
22207-012160	44	21
22207-045320	183	18
	269	18
22217-040000	102	25
		73
	238	24
		72
22217-060000	181	6
	218	6 J
	300	6
22217-080000	32	4
	44	38
22217-100000	25	22
	82	3
	83	3
22217-120000	1	10
	15	7
	185	4
	226	9
22217-140000	152	8
	153	8
	256	5
22217-160000	13	6
	15	8
	184	12
	225	7
	226	10
	231	5
	270	12
22242-000100	78	47
22242-000120	25	7
22242-000170	31	25
	69	13
	230	27
22242-000200	31	11
	35	3
	230	11
22242-000250	39	8
	40	9
22242-000300	22	7
	60	5
	61	5
	77	24
	227	7
22242-000320	96	11
22242-000350	34	10
22242-000420	183	19
	269	19
22242-000450	88	5

Parts No.	Fig. No.	Ref. No.
22242-000500	51	3
	89	5
22252-000150	48	4
22252-000190	49	7
22252-000350	41	7
	56	6
	64	5
22252-000370	31	12
	230	12
22252-000420	35	4
22252-000470	52	23
	53	23
22252-000520	57	21
	77	25
22252-000550	52	24
	53	24
22252-000620	24	2
22252-000850	25	23
	88	6
22252-000900	25	24
	89	6
22252-000950	25	25
22252-001000	52	12
	53	12
	57	16
	77	18
22272-000060	210	22
22272-000080	150	27
	255	20
22272-000120	187	12
	213	10
	214	10
	271	9
22272-000150	72	9
22272-000190	98	25
22287-080000	44	22
22312-030200	44	23
22312-060100	69	14
22312-080180	46	10
	47	22
	69	15
22312-100180	25	26
	38	2
	41	8
	43	2
	46	11
	82	4
	83	4
	88	10
	89	7

Parts No.	Fig. No.	Ref. No.
22312-100180	102	58
	238	57
22312-100200	34	16
22351-030008	52	25
	53	25
	57	22
	77	26
22351-030025	191	12
22351-040016	102	48
	238	47
22351-040024	181	7
	300	7
22351-040032	31	13
	68	9
	230	13
22351-050040	80	9
	84	6
22351-050070	104	9
22351-060012	104	14
22351-060025	68	10
	69	16
22351-060028	107	7
22351-060030	44	24
22351-060032	31	14
	68	11
		12
	69	17
		18
	230	14
22351-060036	193	12
		19
	262	9
	263	10
	272	8
22351-060040	21	8
22351-060050	199	7
22351-060060	47	16
22351-080040	84	7
22351-080070	104	10
22372-060000	14	7
22372-080000	139	12
	189	24
	191	62
	217	23
	248	12
	273	4
	280	3
22372-100000	159	11
	160	18
	260	9

Parts No. Index

Parts No.	Fig. No.	Ref. No.
22372-100000	261	10
22417-160120	211	27
22417-160160	212	17
22417-160180	6	9
	187	13
	189	18
22417-200100	42	15
22417-200200	72	24
	109	9
	217	24
		25
22417-200300	99	13
	100	3
	237	3
22417-250250	150	17
	189	19
	239	11
22417-250300	98	33
22417-400400	19	18
22487-050100	305	9
22487-080160	273	5
	280	4
22487-080200	99	14
	100	4
	237	4
22487-080450	191	63
22487-080600	194	25
	301	28
22512-070400	98	26
22857-400100	210	23
23000-019000	211	49
23000-022000	115	10
	116	8
	117	4
	244	4
23000-035000	3	31
		32
	4	33
		34
	292	39
		40
23000-041000	114	5
	242	4
23000-060000	3	33
	4	35
	292	41
23000-070000	3	34
	4	36
	292	42
23010-060000	22	8

Parts No.	Fig. No.	Ref. No.
23010-060000	227	8
23010-065000	22	9
	227	9
23080-007000	204	7
		11
		14
	305	6
		10
		13
		14
23391-030000	112	9
23414-100014	46	12
23414-140018	102	59
	238	58
23414-160000	112	10
23414-160021	45	16
		17
	233	16
		17
23414-180000	125	2
23414-180023	45	18
		19
		20
		21
	102	60
	233	18
		19
		20
		21
	238	59
23414-200026	113	5
		8 -1
23414-210000	42	16
23491-140002	42	17
	82	5
	83	5
23857-080000	102	61
	238	60
23857-100000	45	22
	233	22
23857-120000	45	23
	233	23
23871-010000	41	9
	42	18
	43	3
	45	24
		25
		26
	46	3
	47	5

Parts No.	Fig. No.	Ref. No.
23871-010000	102	4
	233	24
		25
		26
	238	4
23871-020000	43	4
23887-100002	46	13
23887-160002	112	11
23897-040002	42	19
23980-730310	10	14
	11	14
	224	12
23980-730330	10	15
23980-730440	11	15
23980-730450	11	15 -1
23980-730510	3	35
	4	37
23980-730660	10	16
	11	16
23980-730680	10	16 -1
	11	16 -1
	224	13
23980-730780	3	36
	4	38
	292	43
23980-730870	10	17
	11	17
23980-730890	10	17 -1
	11	17 -1
	224	14
23980-731080	3	37
	4	39
	10	18
	11	18
	224	15
	292	44
24101-060034	48	5
24101-060054	52	26
	53	26
	57	23
24101-060064	52	27
	53	27
	57	24
24101-060084	51	4
	80	10
24101-060114	80	11
24101-060124	25	27
24101-060174	21	13
24101-062054	49	8
	57	25

Parts No.	Fig. No.	Ref. No.
24101-062054	76	8
	77	27
24101-062064	59	17
	60	6
	61	6
	62	5
	63	5
	77	28
24101-062070	86	4
24101-062074	58	7
24101-062080	86	5
	87	4
24101-062084	27	6
24101-062094	23	4
	25	28
	27	7
	88	7
24101-062104	89	8
24101-063060	87	5
24101-063064	59	18
24101-063074	62	6
	63	6
24101-063084	88	8
24101-063094	89	9
24104-060040	35	5
24104-060054	39	9
	40	10
24104-062024	211	20
24104-062104	26	5
24107-060094	51	5
24107-062054	57	26
24107-063054	52	28
	53	28
24121-063054	49	9
	57	27
24141-320070	20	9
24163-305200	59	19
	77	29
24164-000282	78	48
24164-000452	51	6
24190-070001	150	28
	255	21
24190-080001	68	13
	69	19
24190-100001	69	20
24190-110001	31	15
	230	15
24190-130003	102	49
	238	48
24190-180001	96	12

Parts No. Index

Parts No.	Fig. No.	Ref. No.
24311-000060	44	25
24311-000070	5	14
	47	17
24311-000080	102	45
	238	44
24311-000090	44	26
24311-000110	25	8
	97	7
	102	50
	238	49
24311-000120	44	27
	47	20 C
	107	8
24311-000140	35	10
	42	20
	78	21
24311-000160	2	16
	42	21
	44	28
	68	14
	69	21
	82	6
	83	6
24311-000180	25	29
	44	29
	107	9
	113	6
	125	2 -2
		2 -3
24311-000200	97	8
	183	20
	269	20
24311-000220	78	22
24311-000224	45	27
	233	27
24311-000240	47	18
	114	6
	242	5
24311-000360	104	15
24311-000500	15	15
	226	18
24315-000050	102	46
	238	45
24315-000120	102	51
	238	50
24315-000140	35	9
	36	5
	102	52
		62
	111	6

Parts No.	Fig. No.	Ref. No.
24315-000140	112	5 A
		8
	238	51
		61
	241	6
24315-000180	113	10
24315-000200	31	16
	102	53
	230	16
	238	52
24315-000390	183	21
	269	21
24321-000250	69	22
24321-000500	22	10
	227	10
24321-000550	22	11
	227	11
24321-000650	104	16
24321-000750	2	17
24321-000800	101	3
24321-000850	25	9
24321-001300	25	30
24321-002300	27	8
24325-000800	102	54
	238	53
24341-000080	45	28
		29
		30
		31
	102	74
	233	28
		29
		30
		31
	238	73
24341-000090	78	23
24341-000112	47	19
24341-000315	20	10
24351-020300	102	63
	238	62
24351-240280	15	16
	226	19
24351-240300	102	63 -1
	238	62 -1
24421-203007	42	22
24421-355008	82	7
	83	7
24421-456209	24	3
24430-204206	35	6
24550-012200	41	10

Parts No.	Fig. No.	Ref. No.
24550-015120	31	17
	230	17
24550-015250	187	10
	189	11
24550-018200	72	6
24550-020150	183	22
	269	22
24761-010000	18	1 C
		3 C
	99	4
		7
24761-040000	37	1 B
24761-060000	19	4
		15
26013-100252	1	11
26013-140302	243	4
26013-140352	158	3
	186	3
	220	8
	259	3
	284	7
26016-060162	47	20
26021-050122	206	13
26022-040122	118	22
	119	19
	245	19
	293	19
26022-050162	25	10
26023-040102	74	4
	109	6
	234	6
	239	13
26023-040202	5	15
26023-060162	150	34
	255	27
26023-060202	6	10
26062-080201	212	22
26062-100251	213	11
	214	11
	271	10
26106-060102	210	24
26106-060122	3	38
		39
	4	40
		41
	5	20
		24
	6	11
	40	11
	99	15

Parts No.	Fig. No.	Ref. No.
26106-060122	120	18
	126	22
	127	20
	129	5
		6
		7
	130	2
	133	6
	136	2
	191	64
		65
		66
	195	28
	198	20
	210	25
		26
	212	23
	246	18
	279	9
		19
	292	45
		46
	302	27
26106-060162	25	11
	39	1
	40	1
	204	12
	211	28
	212	24
	305	15
26106-060202	3	40
		41
	4	42
		43
	74	5
	132	18
	188	16
	210	27
		28
	211	29
		42 -1
	287	7
	290	8
	291	8
	292	47
		48
	297	6
26106-060252	98	34
	211	30
		31

Parts No. Index

Parts No.	Fig. No.	Ref. No.
26106-060252	211	32
26106-060302	234	7
26106-060352	211	33
	286	3
		3 -1
26106-060402	211	34
	286	12
	309	11
26106-060452	189	25
26106-080102	154	10
	156	7
26106-080122	5	27
	22	12
		13
	31	26
	39	10
	40	12
	46	14
		22
	65	2
	70	2
	71	4
	72	25
	82	8
	83	8
	96	13
	99	16
	114	7
	120	19
	139	13
	150	35
	151	9
	154	10 -1
	163	4 -1
	183	29
	227	12
		13
	230	28
	245	20 -1
	246	19
	248	13
	251	10
	255	28
	257	16
	269	29
26106-080162	3	42
	4	44
	8	9
	9	4
		5

Parts No.	Fig. No.	Ref. No.
26106-080162	13	7
	14	8
	15	14
	25	31
	42	23
		24
	45	32
		33
		34
		35
	46	15
	47	20 D
	68	15
		16
	69	23
		24
	100	5
	117	5
		6
	118	23
	119	20
	120	20
		21
		22
		23
	132	19
	137	4
		5
	138	4
		5
	139	14
		15
		16
	140	22
	141	7
	150	36
	154	15
	155	9
	156	15
	157	9
	159	12
	163	3
		4
	187	14
	189	26
	204	2
	210	29
		30
	211	35
		36

Parts No.	Fig. No.	Ref. No.
26106-080162	226	17
	233	32
		33
		34
		35
	234	8
	237	5
	239	14
	243	5
		6
	244	5
		6
	245	20
	246	20
		21
		22
		23
	248	14
		15
		16
	249	23
	250	7
	251	11
	255	29
	257	17
	258	9
	260	10
	261	11
	274	4
	275	4
	285	3
	286	4
	292	49
	293	20
	294	8
	295	4
		5
	305	16
	309	12
26106-080202	1	12
	3	43
	4	45
	9	6
		7
	69	25
	97	9
	150	37
		38
	211	37
	217	26

Parts No.	Fig. No.	Ref. No.
26106-080202	218	9
	255	30
	292	50
26106-080252	7	2
	38	3
	66	5
	81	3
	111	7
		7 -1
	112	12
		12 -1
	139	17
	191	67
	211	38
		39
	222	2
	223	2
	241	7
		7 -1
	248	17
26106-080302	32	5
26106-080304	275	5
26106-080352	54	14
	55	16
26106-080402	13	8
	193	33
	194	26
	225	8
	301	29
26106-080452	274	5
	288	4
	298	3
26106-080502	47	23
	141	8
26106-080552	10	19
	11	19
	141	8 -1
	224	16
	250	8
26106-080602	44	39
	46	16
	69	26
	151	10
	217	27
	251	12
26106-080702	10	20
	11	20
	47	24
	224	17
26106-080752	211	40

Parts No. Index

Parts No.	Fig. No.	Ref. No.
26106-080752	211	41
26106-080802	44	40
26106-100162	1	19
	7	3
	120	24
	222	3
	223	3
	246	24
26106-100202	1	13
	35	11
	98	35
	161	6
		7
	183	33
	211	42
	226	11
	269	32
26106-100252	15	9
	226	12
26106-100302	25	32
	27	9
	41	11
	43	5
	82	9
	83	9
	88	9
	101	4
	139	18
	217	13 -1
	248	18
26106-100402	37	2
	46	17
	89	10
	232	2
26106-100502	46	18
	202	8
26106-100602	46	19
		20
26106-100652	217	28
26106-100702	218	10
26106-100802	41	12
	82	10
	83	10
26106-120252	15	11 -1
	39	11
	40	13
	102	64
	226	14 -1
	238	63
26106-120302	104	17

Parts No.	Fig. No.	Ref. No.
26106-120452	102	65
	238	64
26106-120502	16	2
	17	2
	102	66
		67
	238	65
		66
26106-120702	102	68
	238	67
26106-120952	102	69
	238	68
26116-060162	218	6 K
26116-060504	6	12
26116-080304	300	14
26116-080354	255	22
26116-100252	25	33
26116-100354	25	33 -1
26116-100404	25	34
26116-121102	15	10
	226	13
26116-140402	256	6
26116-140702	151	11
	190	5
	256	7
26116-160402	15	11
	226	14
26116-160602	13	9
	225	9
26116-160604	13	10
	225	10
26216-080202	1	14
26216-100302	42	3
26226-080652	42	4
26306-100002	98	36
	211	43
26346-060002	39	12
	40	14
	212	18
26346-080002	181	13
	193	34
	300	15
26346-100002	161	8
	162	6
	199	8
	262	10
	263	11
	272	9
26347-060002	5	21
26356-100002	193	13

Parts No.	Fig. No.	Ref. No.
26356-100002	193	20
26356-120002	150	29
	255	23
26356-140002	183	23 -1
	269	23 -1
26356-160002	33	4
	271	11
26366-060002	6	13
26366-080002	113	7
26366-100002	128	2
26367-060002	189	20
26450-040122	102	47
	238	46
26450-040402	102	26
		75
	238	25
		74
26450-060122	46	21
	75	3
26450-060162	44	30
	78	24
		50
26450-080122	25	35
26450-080352	105	3
26487-080163	290	9
	291	9
	297	7
26557-050122	206	14
26557-050162	126	23
		23 -1
	127	21
26557-050202	134	6
26557-050252	200	11
	303	9
26557-060062	181	8
	300	8
26557-060162	126	24
	127	22
26557-060202	150	30
	255	24
26559-050162	210	31
26577-050202	195	29
	302	28
26577-060202	191	68
26577-080252	191	69
26589-060102	193	35
	194	27
26589-060162	147	14
	195	30
	206	15

Parts No.	Fig. No.	Ref. No.
26589-060162	302	29
26589-060202	146	14
26589-080122	190	6
	191	70
26716-050002	134	7
26716-080002	36	6
	44	31
		41
	98	15 E
	124	4
	159	13
	255	25
	260	11
	261	12
	274	6
	275	6
26716-100002	5	25
	25	36 -1
	72	15
		23
	82	11
	83	11
	217	29 -1
		30 -1
26716-120002	1	15
26716-140002	152	9
	153	9
26716-160002	13	11
	225	11
26716-240002	181	9
	300	9
26717-120002	39	13
	40	15
26737-160002	184	13
	270	13
26756-060002	44	32
	150	31
	240	2
	255	26
26756-100002	25	36
26776-120002	126	9
	127	7
26776-160002	231	6
26837-100002	217	29
		30
26877-120002	150	18
	239	12
26979-040052	44	33
	150	3
	255	3

Parts No. Index

Parts No.	Fig. No.	Ref. No.
26979-060202	44	34
26996-140002	183	23
	269	23
27260-320000	41	13
29311-124000	66	6
29622-140001	3	22
		22 -1
	4	23
	118	14
	119	2
	120	25
		26
		27
		29
		30
		31
		32
	183	30
	210	32 -1
	211	44
	245	23
		24
		25
	246	25
		26
		27
		28
		29
		30
	269	34
	293	21
		22
	309	13
29622-250001	10	21
	11	21
	118	25
		25 -1
	119	23
		23 -1
	120	28
	210	32
		33
	211	45
		46
		47
		48
	224	18
	245	22
		22 -1
		26

Parts No.	Fig. No.	Ref. No.
29622-250001	246	31
	287	10
41800-210040	166	4 -1
794130-71410	184	1
	270	1
794416-14700-1	281	1
794416-14800-1	281	6
7A7180-93110	288	1
7A7210-93130	289	1
7A7882-85620	290	5
	291	5
	297	4
7A8160-65800	290	1
7A8343-65800	291	1

Parts No.	Fig. No.	Ref. No.

Parts No.	Fig. No.	Ref. No.