YANMAR

PARTS CATALOG

0CNP4-M94901EN

Last update Oct., 2013

DEPLOYMENT ENGINE MODEL TABLE

TRACTOR			ENGINE	
MODEL	PC-No.	SERIAL No.	MODEL	PC-No.
SC2400	0CNP4-G94901	～F020100	3TNV72-YUKS	0CNP4-G95000
		F020101～	3TNM72-CUKS	0CNP5-G27300

Contents

Fig. No.	Fig. Name
ENGINE CONTROL SECTION	
1.	ENG. ACCESSORY (1)
2.	ENG. ACCESSORY (2)
110.	(2A)ENG. ACCESSORY (2)
119.	ENG. ACCESSORY (3)
3.	ACCEL LEVER
111.	(3A)ACCEL LEVER
4.	TANK, FUEL OIL
5.	COVER, FO TANK
6.	FUEL PIPE
112.	(6A)FUEL PIPE
FRONT AXLE SECTION	
7.	FRAME
8.	ENGINE MOUNT
113.	(8A)ENGINE MOUNT
9.	CENTER PIN
10.	TIE ROD
11.	DRIVE PINION
12.	DIFF GEAR
13.	PROP SHAFT
14.	FRONT SHAFT 1
15.	CASE FRONT AXLE
16.	CASE FRONT GEAR
17.	FRONT SHAFT 2
18.	FRONT SPINDLE
19.	COVER PROP SHAFT
20.	FRONT TIRE R1
21.	FRONT TIRE R3
22.	FRONT TIRE R4
23.	HUB BOLT
24.	STEERING WHEEL
25.	COLUMN BRACKET
114.	(25A)COLUMN BRACKET
26.	PST VALVE
27.	PST CYLINDER
28.	STEERING PIPE
TRANSMISSION SECTION	
29.	DRIVE SHAFT
30.	T/M ACCESSORIES
31.	TRANSAXLE CASE
32.	OIL GAUGE
33.	CENTER CASE K93
34.	MOTOR CASE
35.	FILTER
36.	PUMP
37.	CLUTCH SHAFT
38.	PTO BRAKE
39.	PTO SHAFT

Contents

Fig. No.	Fig. Name
40.	POWER PUMP K93
41.	SOLENOID VALVE
42.	R-PTO SHAFT
43.	SHIFT
44.	RANGE LEVER
45.	CONTROL
46.	PTO LEVER
47.	DRIVE SHAFT
48.	2-4WD LEVER
49.	MFWD SHIFT
50.	HST PEDAL
51.	HST CRUISE LINK
52.	CRUISE LEVER
53.	GEAR PUMP
98.	MOTOR ,K93

REAR AXLE SECTION

54.	INPUT GEAR
55.	DIFF.GEAR
56.	REAR AXLE HOUSING
57.	DIFF.LOCK
58.	DIFF.PEDAL
59.	REAR AXLE SHAFT
60.	TIRE REAR R1
61.	TIRE REAR R3

Fig. No.	Fig. Name
62.	TIRE REAR R4
63.	HUB BOLT
64.	DISC BRAKE
65.	BRAKE PEDAL
66.	PARKING BRAKE

HYD. CONTROL SECTION

67.	LIFT CYLINDER
68.	LIFT ARM
69.	CONTROL VALVE
70.	STOP VALVE
71.	VALVE,SCV
72.	LEVER,SCV
73.	CONTROL, HYD
74.	HYDRAULIC PIPE
75.	OIL COOLER
76.	PIPING,SCV

ELECT. PARTS SECTION

77.	WIRE HARNESS
115.	(77A)WIRE HARNESS
78.	BATTERY
79.	SWITCH A
116.	(79A)SWITCH A
80.	SWITCH B

Contents

Fig. No. Fig. Name

81. LAMP
82. SIDE LAMP
83. METER

FITTING SECTION

84. HOOD
85. DASH BOARD A
86. DASH BOARD B
87. FENDER
88. LEVER GUIDE
89. FOOTREST STAY
90. FOOTREST
91. SEAT
92. SEAT STAY
93. LABEL(SAFETY
94. LABEL(1)
95. LABEL(2)
96. LABEL(3)
97. LABEL(4)

HITCH SECTION

99. 3P KIT
100. SAFETY COVER(PTO
101. ROPS UPPER
102. LOWER FRAME

Fig. No. Fig. Name

103. SMV

OPTIONAL SECTION

104. FRONT WEIGHT
105. FRONT HITCH
107. WORK LAMP
108. HEATER(RADIATOR
109. CABLE ASSY, BRAKE SW
117. SERVICE PARTS
118. FUEL LINE(FAME

ACCESSORY SECTION

106. MANUAL,OPERATOR

Fig.1. ENG. ACCESSORY (1)

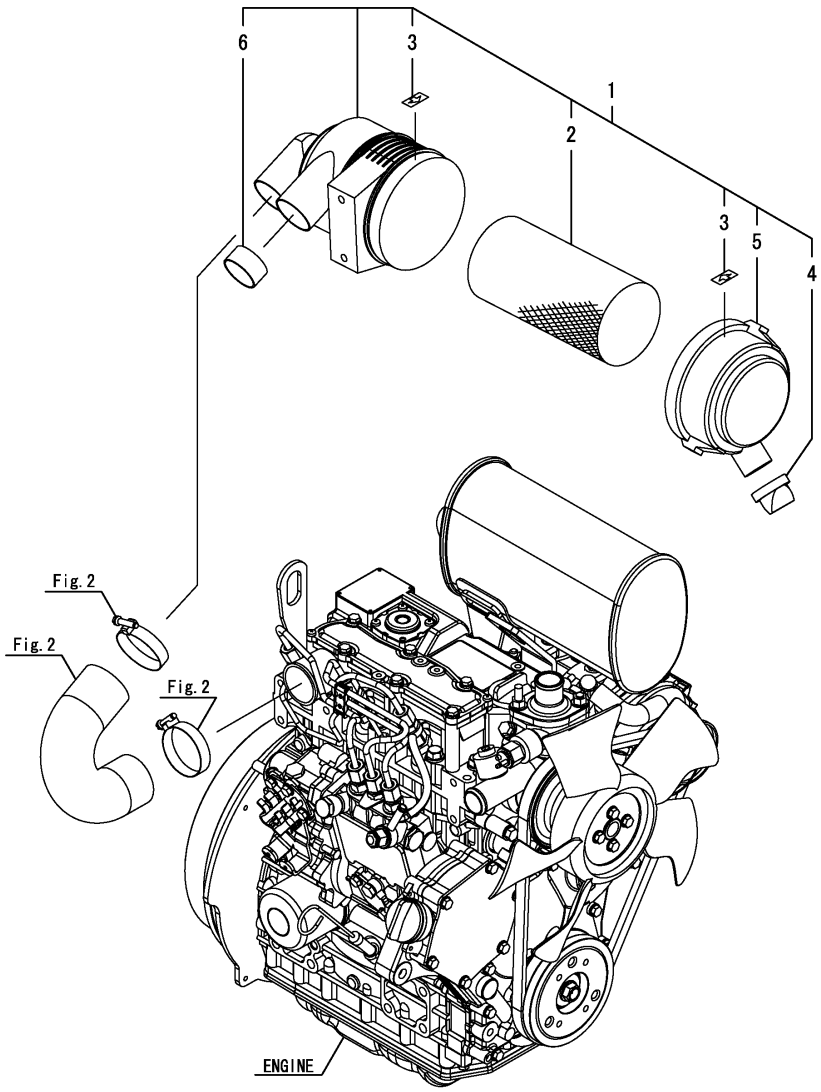

(A)=SC2400(CCY) (D)=
(B)= (E)=
(C)= (F)=

No.	Lev.	Parts No.	Description	Q'ty (A)	(B)	(C)	(D)	(E)	(F)	I	R
1	1	119517-12510	CLEANER ASSY, AIR	1							
2	2	119515-12520	ELEMENT	1							
2-1	2	119655-12560	ELEMENT	1						N	
	(A=FXXXXX)										
3	2	129418-12530	LABEL, MARK	2							
4	2	119808-12540	VALVE, UNLOADER	1							
5	2	119686-12570	COVER ASSY	1							
6	2	105027-12580	RING	1							

N:Old $\xleftrightarrow[\text{No}]{\text{Yes}}$ New, Q:Old $\xleftrightarrow[\text{Yes}]{\text{No}}$ New, R:Old $\xleftrightarrow[\text{Yes}]{\text{Yes}}$ New, S:Old $\xleftrightarrow[\text{No}]{\text{No}}$ New, W:Add, Z:Discontinued, F:Interchangeable by set, K:Q'ty Change

Copyright (C) YANMAR CO., LTD. All RightsReserved.

Fig.2. ENG. ACCESSORY (2)

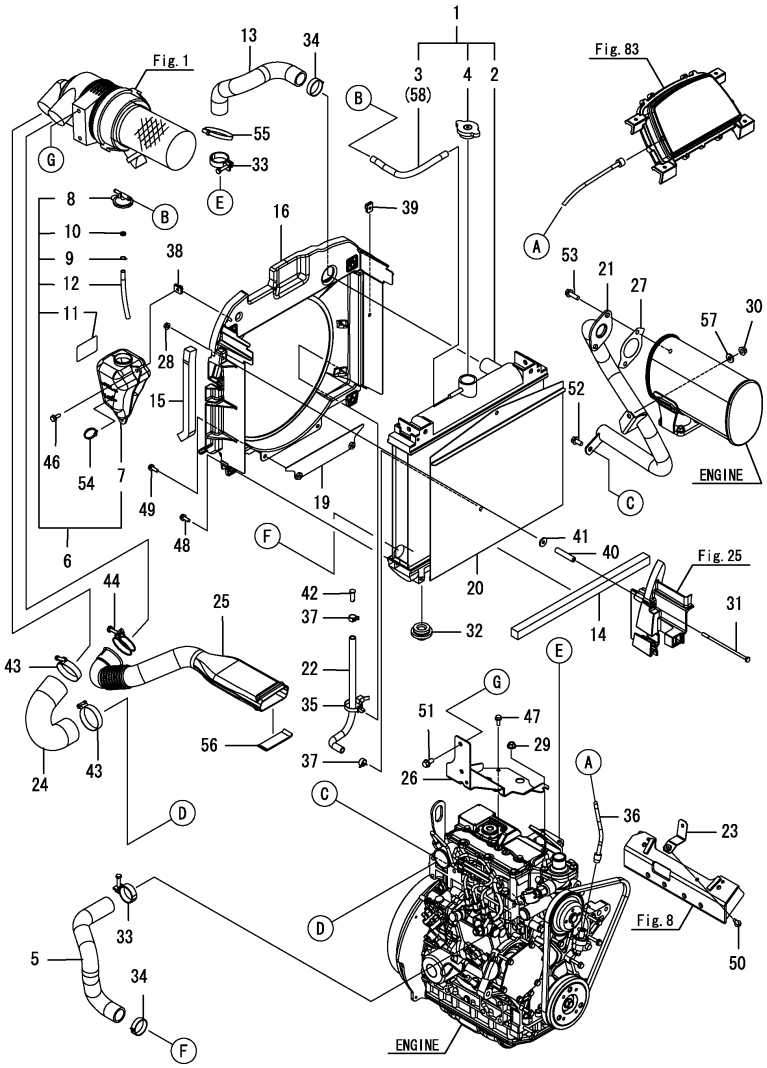

(A)=SC2400(CCY) (D)=
(B)= (E)=
(C)= (F)=

No.	Lev.	Parts No.	Description	Q'ty (A)	(B)	(C)	(D)	(E)	(F)	I	R
1	1	1A7880-00600	RADIATOR ASSY	1							
1-1	1	1A7880-00601	RADIATOR ASSY	1						F	1
	(A=F002035)										
2	2	1A7880-00610	RADIATOR	1							
3	2	1A7880-00630	HOSE, SUB TANK	1						Z	
	(A=F002035)										
4	2	129107-44590	CAP, RADIATOR	1							
5	1	198162-00720	PIPE, WATER L 66	1							
6	1	1A7880-01350	TANK ASSY, COOLANT	1							
7	2	1A7880-01360	TANK, COOLANT	1							
8	2	121450-44531	CAP	1							
9	2	124450-44560	RETAINER	1							
10	2	121470-44581	GASKET	1							
11	2	124764-44810	LABEL,SUB-TANK	1						Z	
	(A=F020101)										
12	2	23065-070130	PIPE, 7X 130	1							
13	1	1A7880-01410	HOSE, WATER A	1							
14	1	1A7880-01440	SEAL, RADIATOR	1							
15	1	1A7880-01460	SEAL, SHROUD LOWER	2							
16	1	1A7880-01500	SHROUD ASSY, FAN M	1							
19	1	1A7880-01520	PLATE ASSY, SHROUD	1							
20	1	1A7880-01560	SCREEN, RADIATOR	1							
21	1	1A7880-03110	PIPE, EXHAUST	1							
21-1	1	1A7880-03111	PIPE, EXHAUST	1						N	
	(A=FXXXXX)										
22	1	1A7510-04430	HOSE, FUEL F-P	1							
23	1	1A7880-05410	INSULATOR	1							
24	1	1A7880-06010	HOSE, AIR INTAKE	1							
25	1	1A7880-06150	PIPE, AIR INTAKE	1							
26	1	1A7880-06200	BRACKET ASSY,AIR CLN	1							
26-1	1	1A7880-06201	BRACKET ASSY	1						N	
	(A=F002869)										
27	1	129052-13550	GASKET	1							
28	1	194990-22130	NUT, M6	2							
29	1	194990-22140	NUT, M8	1							
30	1	194990-22140	NUT, M8	1							
31	1	1A7880-01650	BOLT, M6X135	2							
32	1	119255-44660	ABSORBER	2							
33	1	121267-49500	BAND, 38	2							
34	1	175022-49730	CRIP 31, HOSE	2							
35	1	194680-51670	BAND, CLIP	2							
36	1	1A6680-56920	CABLE, HOUR METER	1							
37	1	114270-59010	CLIP, HOSE 12	2							
38	1	198071-61890	NUT, SPEED M6	2							
39	1	198071-61890	NUT, SPEED M6	1							
40	1	198461-87590	COLLAR, 6.5X10X52	2							
41	1	22157-060000	WASHER, 6	2							
42	1	22487-080200	PIN, H 8X 20	1							
43	1	23000-054000	CLAMP, 54	2							
44	1	23010-050000	CLAMP, 50	1							
46	1	26106-060162	BOLT, M6X 16 PLATED	2							

Remarks
*Serial No.
Up to F020100 refer to this item.
From F020101 refer to Fig.110.
(1)Ref.No.1 is interchangeable
with a set of 1-1 & 58.

N:Old $\xleftarrow[\text{No}]{\text{Yes}}$ New, Q:Old $\xleftarrow[\text{Yes}]{\text{No}}$ New, R:Old $\xleftarrow[\text{Yes}]{\text{Yes}}$ New, S:Old $\xleftarrow[\text{No}]{\text{No}}$ New, W:Add, Z:Discontinued, F:Interchangeable by set, K:Q'ty Change

++ CONTINUE ++

Copyright (C) YANMAR CO., LTD. All RightsReserved.

Fig.2. ENG. ACCESSORY (2)

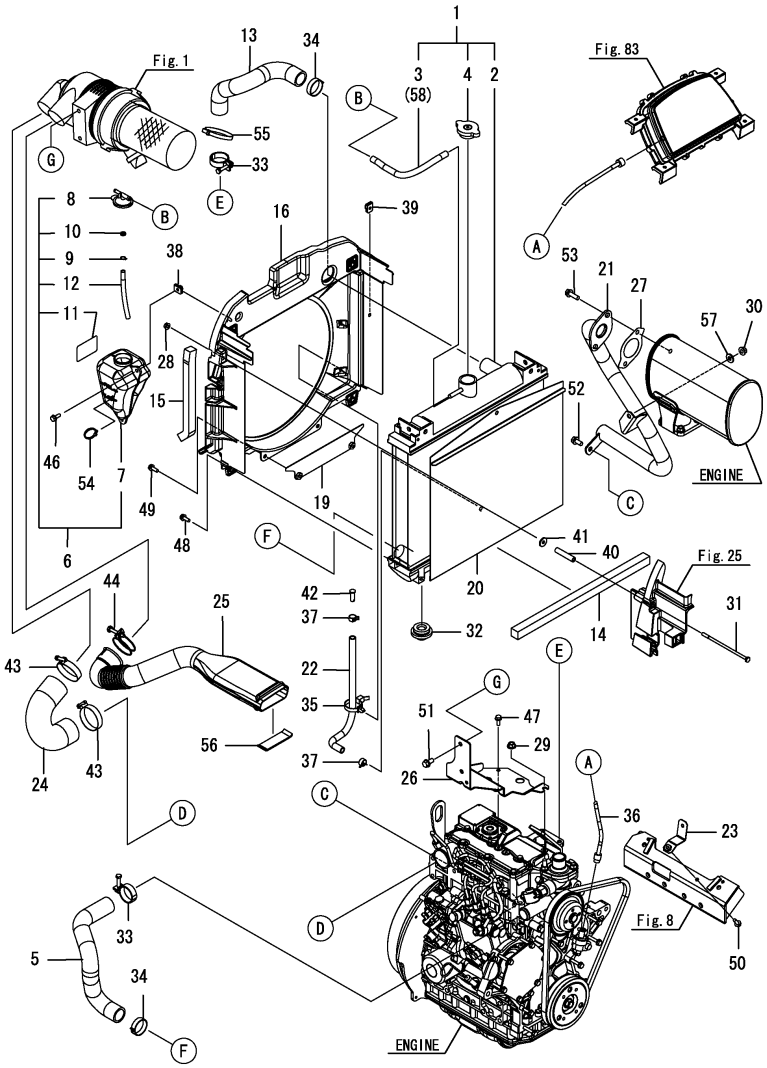

(A)=SC2400(CCY) (D)=
(B)= (E)=
(C)= (F)=

No.	Lev.	Parts No.	Description	Q'ty (A)	(B)	(C)	(D)	(E)	(F)	I	R
47	1	26106-060162	BOLT, M6X 16 PLATED	2							
48	1	26106-060162	BOLT, M6X 16 PLATED	4							
49	1	26106-060162	BOLT, M6X 16 PLATED	2							
50	1	26106-060162	BOLT, M6X 16 PLATED	1							
51	1	26106-080162	BOLT, M8X 16 PLATED	2							
52	1	26106-080162	BOLT, M8X 16 PLATED	1							
53	1	26106-080252	BOLT, M8X 25 PLATED	2							
54	1	1A1380-55310	CLAMP, WIRE	1							
55	1	29622-250001	BAND, RF250	1							
55-1	1	1A8300-51210	BAND, REPEAT	1						R	
	(A=FXXXXX)										
56	1	198162-61370	SEAL, RADIATOR E	1							
57	1	22137-080000	WASHER, 8	1						W	
	(A=FXXXXX)										
58	1	1A7880-00640	HOSE, SUB TANK	1						W	
	(A=F002035)										

Remarks
*Serial No.
Up to F020100 refer to this item.
From F020101 refer to Fig.110.
(1)Ref.No.1 is interchangeable
with a set of 1-1 & 58.

N:Old $\overset{\text{Yes}}{\underset{\text{No}}{\leftrightarrow}}$ New, Q:Old $\overset{\text{No}}{\underset{\text{Yes}}{\leftrightarrow}}$ New, R:Old $\overset{\text{Yes}}{\underset{\text{Yes}}{\leftrightarrow}}$ New, S:Old $\overset{\text{No}}{\underset{\text{No}}{\leftrightarrow}}$ New, W:Add, Z:Discontinued, F:Interchangeable by set, K:Q'ty Change

Copyright (C) YANMAR CO., LTD. All RightsReserved.

Fig.110. (2A)ENG. ACCESSORY (2)

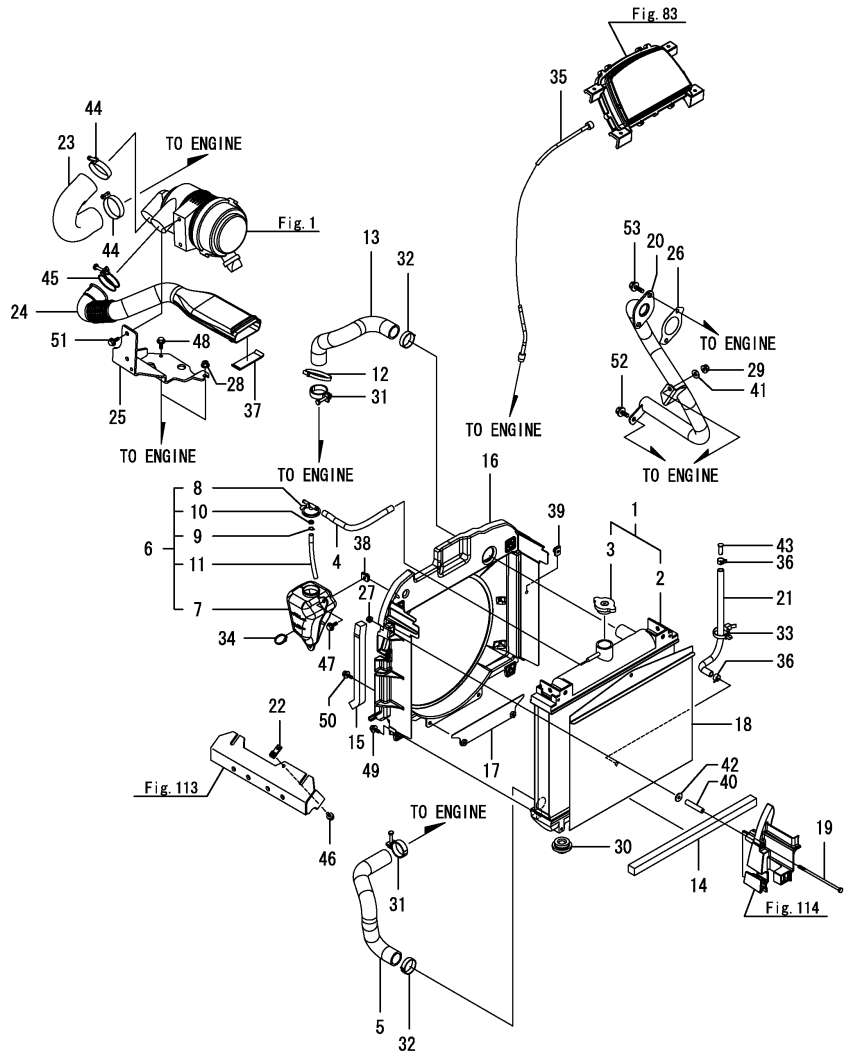

Remarks
*Serial No.
Up to F020100 refer to Fig.2.
From F020101 refer to this item.

(A)=SC2400(CCY) (D)=
(B)= (E)=
(C)= (F)=

No.	Lev.	Parts No.	Description	Q'ty (A)	(B)	(C)	(D)	(E)	(F)	I	R
1	1	1A7880-00601	RADIATOR ASSY	1							
2	2	1A7880-00610	RADIATOR	1							
3	2	129107-44590	CAP, RADIATOR	1							
4	1	1A7880-00640	HOSE, SUB TANK	1							
5	1	198162-00720	PIPE, WATER L 66	1							
6	1	1A7880-01350	TANK ASSY, COOLANT	1							
7	2	1A7880-01360	TANK, COOLANT	1							
8	2	121450-44531	CAP	1							
9	2	124450-44560	RETAINER	1							
10	2	121470-44581	GASKET	1							
11	2	23065-070130	PIPE, 7X 130	1							
12	1	1A8300-51210	BAND, REPEAT	1							
13	1	1A7880-01410	HOSE, WATER A	1							
14	1	1A7880-01440	SEAL, RADIATOR	1							
15	1	1A7880-01460	SEAL, SHROUD LOWER	2							
16	1	1A7880-01500	SHROUD ASSY, FAN M	1							
17	1	1A7880-01520	PLATE ASSY, SHROUD	1							
18	1	1A7880-01560	SCREEN, RADIATOR	1							
19	1	1A7880-01650	BOLT, M6X135	2							
20	1	1A7880-03111	PIPE, EXHAUST	1							
21	1	1A7510-04430	HOSE, FUEL F-P	1							
22	1	1A7882-05410	PLATE ASSY,MOUNT	1							
23	1	1A7882-06010	HOSE, AIR INTAKE	1							
24	1	1A7880-06150	PIPE, AIR INTAKE	1							
25	1	1A7880-06201	BRACKET ASSY	1							
26	1	129052-13550	GASKET	1							
27	1	194990-22130	NUT, M6	2							
28	1	194990-22140	NUT, M8	1							
29	1	194990-22140	NUT, M8	1							
30	1	119255-44660	ABSORBER	2							
31	1	121267-49500	BAND, 38	2							
32	1	175022-49730	CRIP 31, HOSE	2							
33	1	194680-51670	BAND, CLIP	2							
34	1	1A1380-55310	CLAMP, WIRE	1							
35	1	1A6680-56920	CABLE, HOUR METER	1							
36	1	114270-59010	CLIP, HOSE 12	2							
37	1	198162-61370	SEAL, RADIATOR E	1							
38	1	198071-61890	NUT, SPEED M6	2							
39	1	198071-61890	NUT, SPEED M6	1							
40	1	198461-87590	COLLAR, 6.5X10X52	2							
41	1	22137-080000	WASHER, 8	1							
42	1	22157-060000	WASHER, 6	2							
43	1	22487-080200	PIN, H 8X 20	1							
44	1	23000-054000	CLAMP, 54	2							
45	1	23010-050000	CLAMP, 50	1							
46	1	26106-060122	BOLT, M6X 12 PLATED	1							
47	1	26106-060162	BOLT, M6X 16 PLATED	2							
48	1	26106-060162	BOLT, M6X 16 PLATED	2							
49	1	26106-060162	BOLT, M6X 16 PLATED	4							
50	1	26106-060162	BOLT, M6X 16 PLATED	2							
51	1	26106-080162	BOLT, M8X 16 PLATED	2							

N:Old $\xleftarrow[\text{No}]{\text{Yes}}$ New, Q:Old $\xleftarrow[\text{Yes}]{\text{No}}$ New, R:Old $\xleftarrow[\text{Yes}]{\text{Yes}}$ New, S:Old $\xleftarrow[\text{No}]{\text{No}}$ New, W:Add, Z:Discontinued, F:Interchangeable by set, K:Q'ty Change

++ CONTINUE ++

Copyright (C) YANMAR CO., LTD. All RightsReserved.

Fig.110. (2A)ENG. ACCESSORY (2)

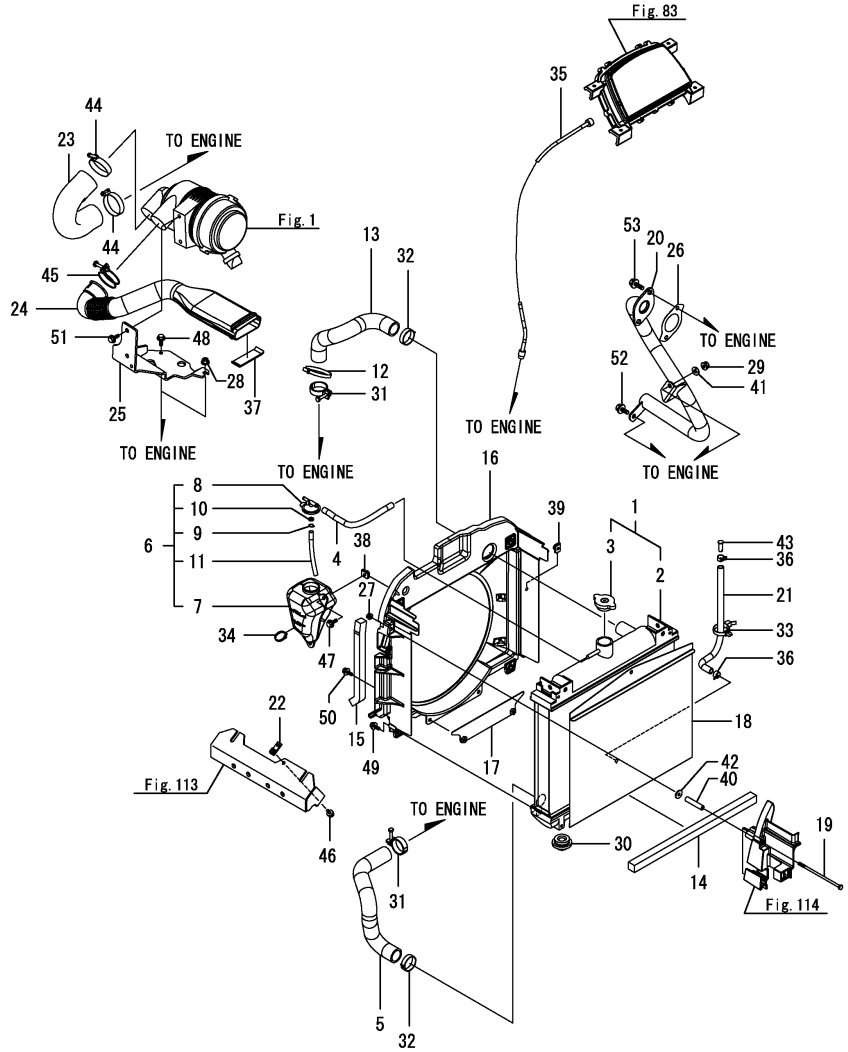

(A)=SC2400(CCY) (D)=
(B)= (E)=
(C)= (F)=

No.	Lev.	Parts No.	Description	Q'ty (A)	(B)	(C)	(D)	(E)	(F)	I	R
52	1	26106-080162	BOLT, M8X 16 PLATED	1							
53	1	26106-080252	BOLT, M8X 25 PLATED	2							

Remarks
*Serial No.
Up to F020100 refer to Fig.2.
From F020101 refer to this item.

N:Old ◄Yes/No► New, Q:Old ◄No/Yes► New, R:Old ◄Yes/Yes► New, S:Old ◄No/No► New, W:Add, Z:Discontinued, F:Interchangeable by set, K:Q'ty Change

Copyright (C) YANMAR CO., LTD. All RightsReserved.

Fig.119. ENG. ACCESSORY (3)

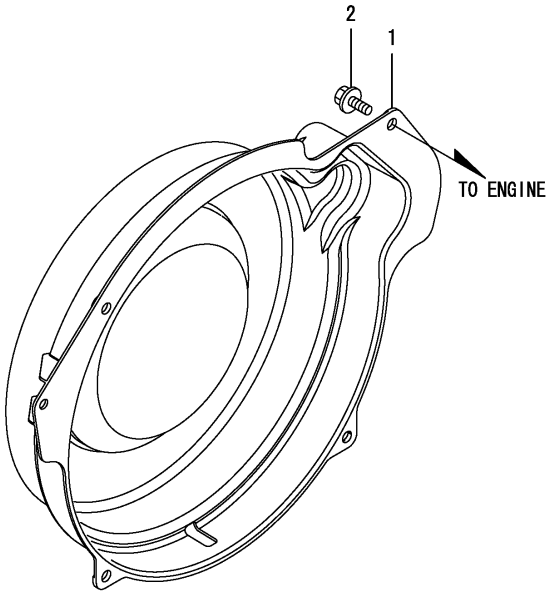

(A)=SC2400(CCY) (D)=
(B)= (E)=
(C)= (F)=

No.	Lev.	Parts No.	Description	Q'ty (A)	(B)	(C)	(D)	(E)	(F)	I	R
1	1	1A7880-05110	COVER, FLYWHEEL	1							
2	1	26106-060122	BOLT, M6X 12 PLATED	4							

N:Old $\xleftrightarrow[\text{No}]{\text{Yes}}$ New, Q:Old $\xleftrightarrow[\text{Yes}]{\text{No}}$ New, R:Old $\xleftrightarrow[\text{Yes}]{\text{Yes}}$ New, S:Old $\xleftrightarrow[\text{No}]{\text{No}}$ New, W:Add, Z:Discontinued, F:Interchangeable by set, K:Q'ty Change

Copyright (C) YANMAR CO., LTD. All RightsReserved.

Fig.3. ACCEL LEVER

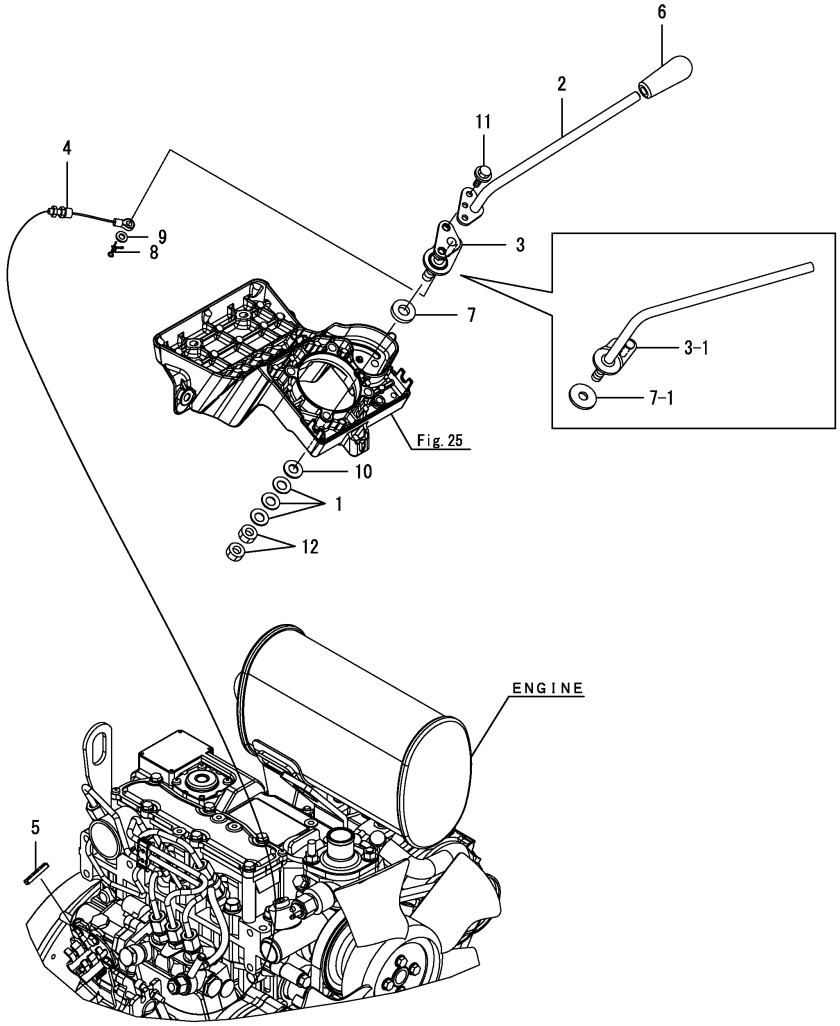

(A)=SC2400(CCY) (D)=
(B)= (E)=
(C)= (F)=

No.	Lev.	Parts No.	Description	Q'ty (A)	(B)	(C)	(D)	(E)	(F)	I	R
1	1	194740-00160	SPRING, 10	3							
2	1	1A7880-01060	LEVER, ACCELERATOR	1						Z	
	(A=FZZZZZ)										
3	1	1A7880-01110	LEVER, ACCELERATOR	1							
3-1	1	1A7880-01010	LEVER ASSY, CONTROL	1						S	
	(A=FZZZZZ)										
4	1	1A7880-01150	WIRE ASSY, CONTROL	1							
5	1	198071-01160	RUBBER	1							
6	1	198253-01190	KNOB, LEVER	1							
7	1	1C6900-48251	SPACER, 13X26X5	1							
7-1	1	198200-01260	PLATE, FRICTION	1						S	
	(A=FZZZZZ)										
8	1	1C6281-52310	PIN, SNAP 6	1							
9	1	22137-060000	WASHER, 6	1							
10	1	22137-100000	WASHER, 10	1							
11	1	26106-060122	BOLT, M6X 12 PLATED	2						Z	
	(A=FZZZZZ)										
12	1	26716-100002	NUT, M10	2							

Remarks
*Serial No.
Up to F020100 refer to this item.
From F020101 refer to Fig.111.

N:Old $\overset{\text{Yes}}{\underset{\text{No}}{\leftrightarrows}}$ New, Q:Old $\overset{\text{No}}{\underset{\text{Yes}}{\leftrightarrows}}$ New, R:Old $\overset{\text{Yes}}{\underset{\text{Yes}}{\leftrightarrows}}$ New, S:Old $\overset{\text{No}}{\underset{\text{No}}{\leftrightarrows}}$ New, W:Add, Z:Discontinued, F:Interchangeable by set, K:Q'ty Change

Copyright (C) YANMAR CO., LTD. All RightsReserved.

Fig.111. (3A)ACCEL LEVER

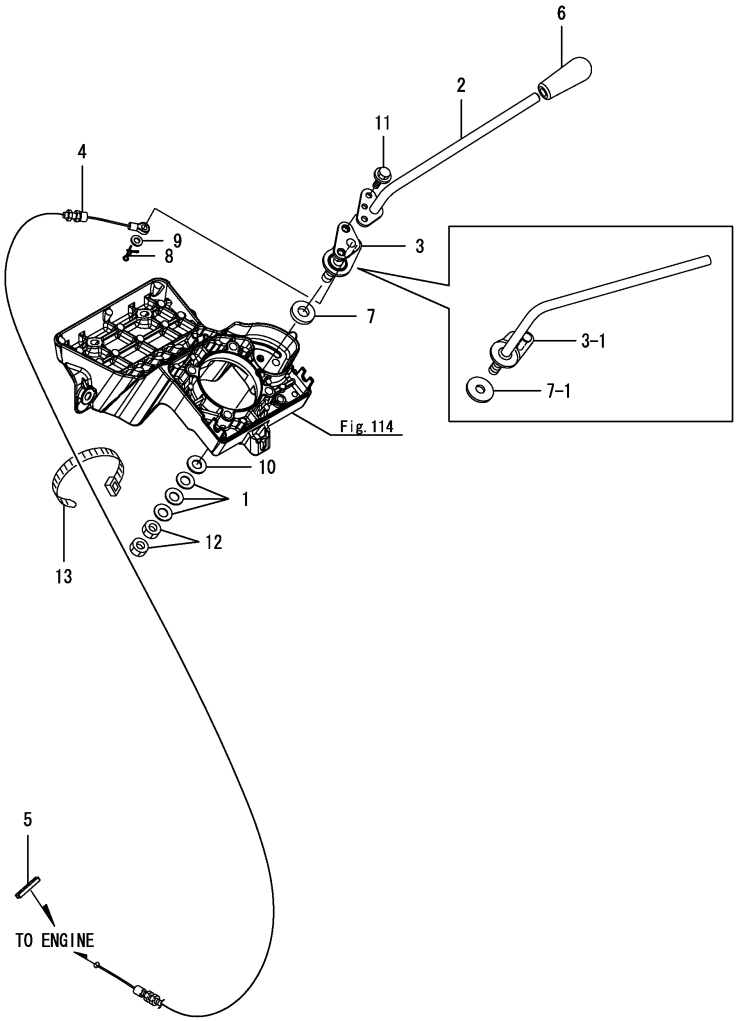

(A)=SC2400(CCY) (D)=
(B)= (E)=
(C)= (F)=

No.	Lev.	Parts No.	Description	Q'ty (A)	(B)	(C)	(D)	(E)	(F)	I	R
1	1	194740-00160	SPRING, 10	3							
2	1	1A7880-01060	LEVER, ACCELERATOR	1						Z	
	(A=FZZZZZ)										
3	1	1A7880-01110	LEVER, ACCELERATOR	1							
3-1	1	1A7880-01010	LEVER ASSY, CONTROL	1						S	
	(A=FZZZZZ)										
4	1	1A7882-01150	WIRE ASSY, CONTROL	1							
5	1	198071-01160	RUBBER	1							
6	1	198253-01190	KNOB, LEVER	1							
7	1	1C6900-48251	SPACER, 13X26X5	1							
7-1	1	198200-01260	PLATE, FRICTION	1						S	
	(A=FZZZZZ)										
8	1	1C6281-52310	PIN, SNAP 6	1							
9	1	22137-060000	WASHER, 6	1							
10	1	22137-100000	WASHER, 10	1							
11	1	26106-060122	BOLT, M6X 12 PLATED	2						Z	
	(A=FZZZZZ)										
12	1	26716-100002	NUT, M10	2							
13	1	1A8300-51210	BAND, REPEAT	1							

Remarks
*Serial No.
Up to F020100 refer to Fig.3.
From F020101 refer to this item.

N:Old $\overset{\text{Yes}}{\underset{\text{No}}{\leftrightarrows}}$ New, Q:Old $\overset{\text{No}}{\underset{\text{Yes}}{\leftrightarrows}}$ New, R:Old $\overset{\text{Yes}}{\underset{\text{Yes}}{\leftrightarrows}}$ New, S:Old $\overset{\text{No}}{\underset{\text{No}}{\leftrightarrows}}$ New, W:Add, Z:Discontinued, F:Interchangeable by set, K:Q'ty Change

Copyright (C) YANMAR CO., LTD. All RightsReserved.

Fig.4. TANK, FUEL OIL

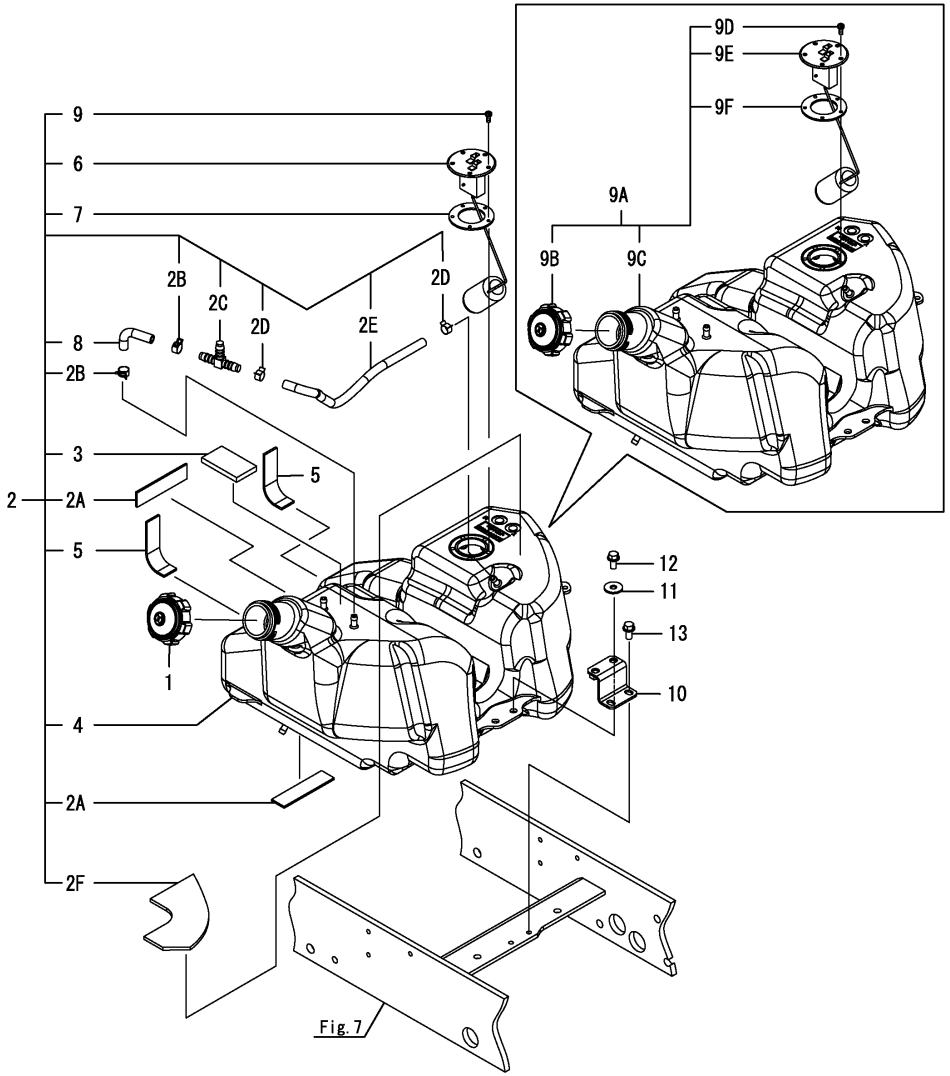

(A)=SC2400(CCY) (D)=
(B)= (E)=
(C)= (F)=

No.	Lev.	Parts No.	Description	Q'ty (A)	(B)	(C)	(D)	(E)	(F)	I	R
1	1	1A7880-04091	CAP, FUEL TANK	1						Z	
	(A=FXXXXX)										
2	1	1A7880-04100	TANK ASSY, FUEL	1							
2-1	1	1A7880-04101	TANK ASSY, FUEL	1						R	
	(A=FXXXXX)										
2A	2	198165-04380	RUBBER, 100X25X3	2							
2B	2	114270-59010	CLIP, HOSE 12	2							
2C	2	119629-59910	JOINT, 3-WAY	1							
2D	2	23080-012000	CLAMP, 12	2							
2D-1	2	114270-59010	CLIP, HOSE 12	2						R	
	(A=FXXXXX)										
2E	2	23980-730260	HOSE, 7.3X 260	1							
2F	2	1A7880-04040	CUSHION, TANK R	1							
3	2	1A7880-04080	CUSHION, TANK UPPER	1							
4	2	1A7880-04110	TANK, FUEL	1						Z	
	(A=FXXXXX)										
5	2	1A7880-04050	CUSHION, TANK SIDE	2							
6	2	1A7880-56600	GAUGE ASSY, FUEL	1							
6-1	2	1A7880-56601	GAUGE ASSY, FUEL	1						N	
	(A=FXXXXX)										
6-2	2	1A7880-56601	GAUGE ASSY, FUEL	1						Z	
	(A=FXXXXX)										
7	2	198200-56630	GASKET, GAUGE	1						Z	
	(A=FXXXXX)										
8	2	198448-04270	HOSE, RETURN	1							
9	2	26022-050122	SCREW, M5X12	5							
9-1	2	1A7180-04180	SCREW, M5X14	5						N	
	(A=FXXXXX)										
9-2	2	1A7180-04180	SCREW, M5X14	5						Z	
	(A=FXXXXX)										
9A	2	1A7880-04130	TANK, FUEL KIT	1						W	
	(A=FXXXXX)										
9B	3	1A7880-04091	CAP, FUEL TANK	1						W	
	(A=FXXXXX)										
9C	3	1A7880-04111	TANK, FUEL	1						W	
	(A=FXXXXX)										
9D	3	1A7180-04180	SCREW, M5X14	5						W	
	(A=FXXXXX)										
9E	3	1A7880-56601	GAUGE ASSY, FUEL	1						W	
	(A=FXXXXX)										
9F	3	198200-56630	GASKET, GAUGE	1						W	
	(A=FXXXXX)										
10	1	1A7880-04210	STAY, FUEL TANK	1							
11	1	22157-080000	WASHER, 8	2							
12	1	26106-080162	BOLT, M8X 16 PLATED	2							
13	1	26106-080162	BOLT, M8X 16 PLATED	2							

N:Old $\xleftrightarrow[\text{No}]{\text{Yes}}$ New, Q:Old $\xleftrightarrow[\text{Yes}]{\text{No}}$ New, R:Old $\xleftrightarrow[\text{Yes}]{\text{Yes}}$ New, S:Old $\xleftrightarrow[\text{No}]{\text{No}}$ New, W:Add, Z:Discontinued, F:Interchangeable by set, K:Q'ty Change

Copyright (C) YANMAR CO., LTD. All RightsReserved.

Fig.5. COVER, FO TANK

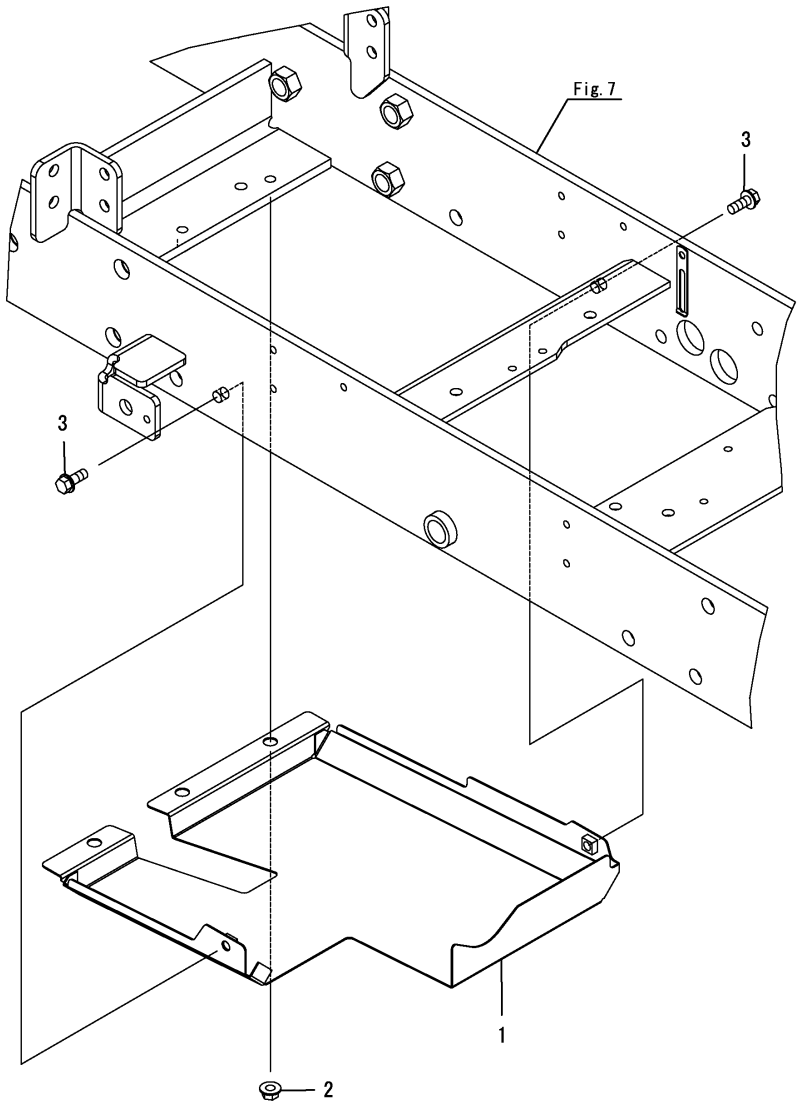

(A)=SC2400(CCY) (D)=
(B)= (E)=
(C)= (F)=

No.	Lev.	Parts No.	Description	Q'ty (A)	(B)	(C)	(D)	(E)	(F)	I	R
1	1	1A7880-04300	COVER ASSY,LOWER	1							
1-1	1	1A7880-04301	COVER, FUEL TANK	1						R	
	(A=FZZZZZ)										
2	1	194990-22140	NUT, M8	3							
3	1	26106-080202	BOLT, M8X 20 PLATED	2							

N:Old $\xleftarrow[\text{No}]{\text{Yes}}$ New, Q:Old $\xleftarrow[\text{Yes}]{\text{No}}$ New, R:Old $\xleftarrow[\text{Yes}]{\text{Yes}}$ New, S:Old $\xleftarrow[\text{No}]{\text{No}}$ New, W:Add, Z:Discontinued, F:Interchangeable by set, K:Q'ty Change

Copyright (C) YANMAR CO., LTD. All RightsReserved.

Fig.6. FUEL PIPE

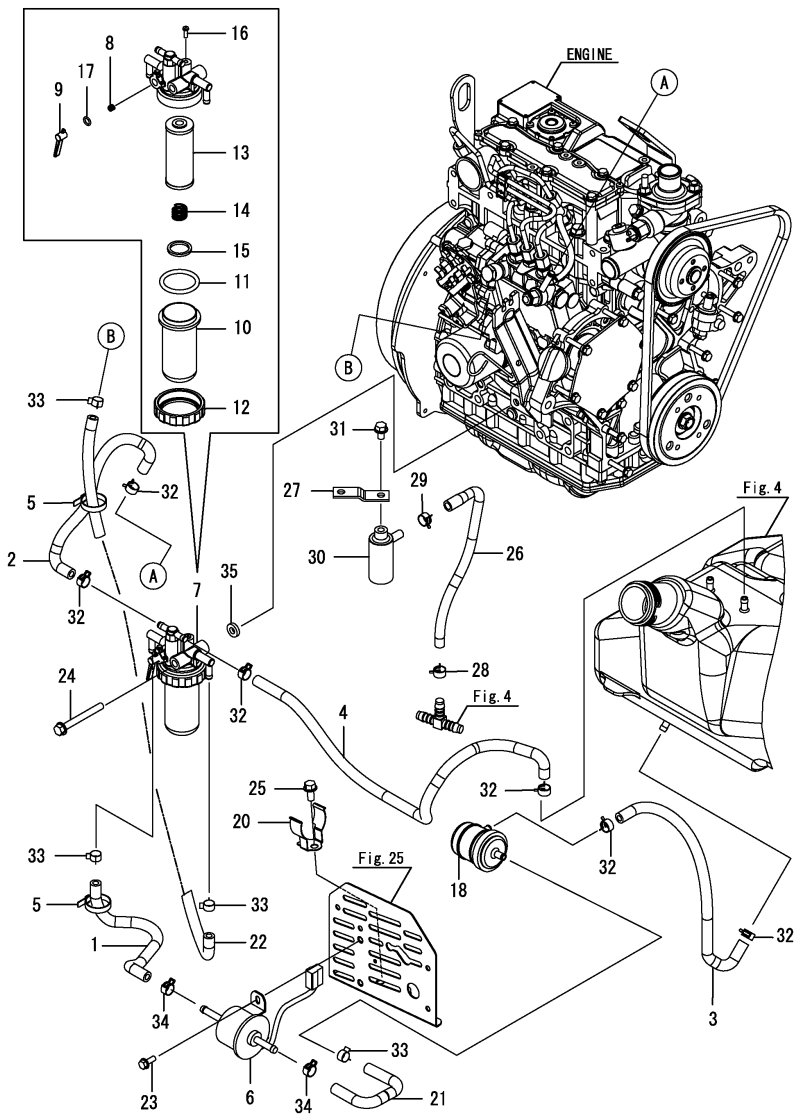

(A)=SC2400(CCY) (D)=
(B)= (E)=
(C)= (F)=

No.	Lev.	Parts No.	Description	Q'ty (A)	(B)	(C)	(D)	(E)	(F)	I	R
1	1	23980-730260	HOSE, 7.3X 260	1							
2	1	1A7880-04410	HOSE, FUEL F-E	1							
3	1	1A7510-04430	HOSE, FUEL F-P	1							
4	1	1A7880-04430	HOSE, FUEL F-T	1							
5	1	29622-140001	BAND, RF140	2							
5-1	1	1A8300-51210	BAND, REPEAT	2							R
	(A=FXXXXX)										
6	1	119225-52102	PUMP ASSY, FUEL FEED	1							
7	1	129053-55620	FILTER ASSY, FUEL	1							
8	2	104200-55330	SPRING, VALVE	1							
9	2	119810-55340	LEVER	1							
10	2	129107-55510	CUP, STRAINER	1							
11	2	102103-55520	O-RING	1							
12	2	110250-55610	RING, RETAINING	1							
13	2	119810-55650	ELEMENT	1							
14	2	121257-55720	SPRING	1							
15	2	121257-55731	FLOAT	1							
16	2	104200-55750	SCREW, M4	1							
17	2	24311-240100	O-RING, 1AP10A	1							
18	1	129052-55630	FILTER, FUEL	1							
20	1	198072-04320	CLAMP, FILTER	1							
21	1	23980-730150	HOSE, 7.3X 150	1							
22	1	23980-730330	HOSE, 7.3X 330	1							
23	1	26106-060162	BOLT, M6X 16 PLATED	2							
24	1	26106-080702	BOLT, M8X 70 PLATED	1							
24-1	1	26106-080602	BOLT, M8X 60 PLATED	1							R
	(A=FXXXXX)										
25	1	26106-080162	BOLT, M8X 16 PLATED	1							
25-1	1	26106-080122	BOLT, M8X 12 PLATED	1							N
	(A=FXXXXX)										
26	1	1A7880-04270	HOSE, AIR VENT	1							
27	1	194312-39480	SUPPORT, BREATHER	1							
28	1	114270-59010	CLIP, HOSE 12	1							
29	1	114270-59010	CLIP, HOSE 12	1							
30	1	194205-63550	BREATHER, AIR	1							
31	1	26106-080122	BOLT, M8X 12 PLATED	1							
32	1	114270-59010	CLIP, HOSE 12	6							
33	1	23080-012000	CLAMP, 12	4							
33-1	1	114270-59010	CLIP, HOSE 12	4							R
	(A=FXXXXX)										
34	1	114270-59010	CLIP, HOSE 12	2							
35	1	194145-22430	SPACER, 18	1							Z
	(A=FXXXXX)										

Remarks
*Serial No.
Up to F020100 refer to this item.
From F020101 refer to Fig.112.

N:Old $\overset{\text{Yes}}{\underset{\text{No}}{\leftrightarrow}}$ New, Q:Old $\overset{\text{No}}{\underset{\text{Yes}}{\leftrightarrow}}$ New, R:Old $\overset{\text{Yes}}{\underset{\text{Yes}}{\leftrightarrow}}$ New, S:Old $\overset{\text{No}}{\underset{\text{No}}{\leftrightarrow}}$ New, W:Add, Z:Discontinued, F:Interchangeable by set, K:Q'ty Change

Copyright (C) YANMAR CO., LTD. All RightsReserved.

Fig.112. (6A)FUEL PIPE

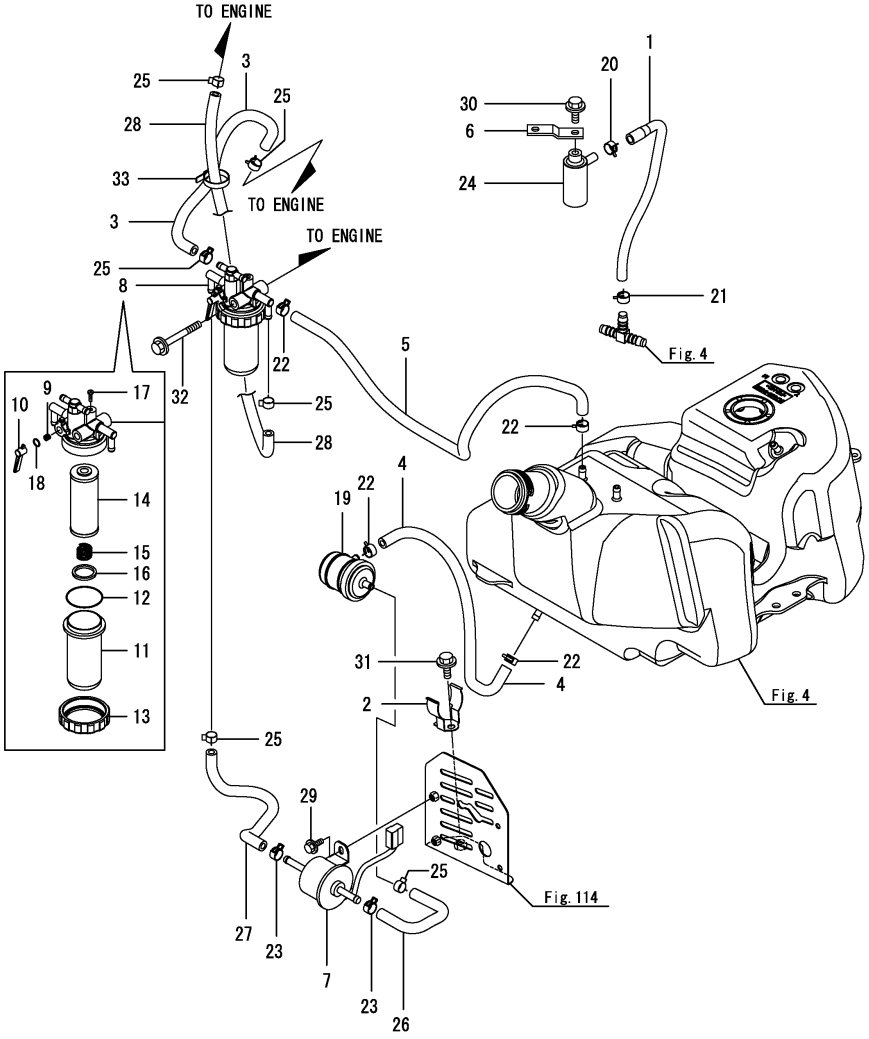

(A)=SC2400(CCY) (D)=
(B)= (E)=
(C)= (F)=

No.	Lev.	Parts No.	Description	Q'ty (A)	(B)	(C)	(D)	(E)	(F)	I	R
1	1	1A7880-04270	HOSE, AIR VENT	1							
2	1	198072-04320	CLAMP, FILTER	1							
3	1	23980-730400	HOSE, 7.3X 400	1							
4	1	1A7510-04430	HOSE, FUEL F-P	1							
5	1	1A7880-04430	HOSE, FUEL F-T	1							
6	1	194312-39480	SUPPORT, BREATHER	1							
7	1	119225-52102	PUMP ASSY, FUEL FEED	1							
8	1	129053-55620	FILTER ASSY, FUEL	1							
9	2	104200-55330	SPRING, VALVE	1							
10	2	119810-55340	LEVER	1							
11	2	129107-55510	CUP, STRAINER	1							
12	2	102103-55520	O-RING	1							
13	2	110250-55610	RING, RETAINING	1							
14	2	119810-55650	ELEMENT	1							
15	2	121257-55720	SPRING	1							
16	2	121257-55731	FLOAT	1							
17	2	104200-55750	SCREW, M4	1							
18	2	24311-240100	O-RING, 1AP10A	1							
19	1	129052-55630	FILTER, FUEL	1							
20	1	114270-59010	CLIP, HOSE 12	1							
21	1	114270-59010	CLIP, HOSE 12	1							
22	1	114270-59010	CLIP, HOSE 12	4							
23	1	114270-59010	CLIP, HOSE 12	2							
24	1	194205-63550	BREATHER, AIR	1							
25	1	23080-012000	CLAMP, 12	6							
25-1	1 (A=FXXXXX)	114270-59010	CLIP, HOSE 12	6						R	
26	1	23980-730150	HOSE, 7.3X 150	1							
27	1	23980-730180	HOSE, 7.3X 180	1							
28	1	23980-730350	HOSE, 7.3X 350	1							
29	1	26106-060162	BOLT, M6X 16 PLATED	2							
30	1	26106-080122	BOLT, M8X 12 PLATED	1							
31	1	26106-080122	BOLT, M8X 12 PLATED	1							
32	1	26106-080652	BOLT, M8X 65 PLATED	1							
33	1	1A8300-51210	BAND, REPEAT	1							

Remarks
*Serial No.
Up to F020100 refer to Fig.6.
From F020101 refer to this item.

N:Old ←Yes/No→ New, Q:Old ←No/Yes→ New, R:Old ←Yes/Yes→ New, S:Old ←No/No→ New, W:Add, Z:Discontinued, F:Interchangeable by set, K:Q'ty Change

Copyright (C) YANMAR CO., LTD. All RightsReserved.

Fig.7. FRAME

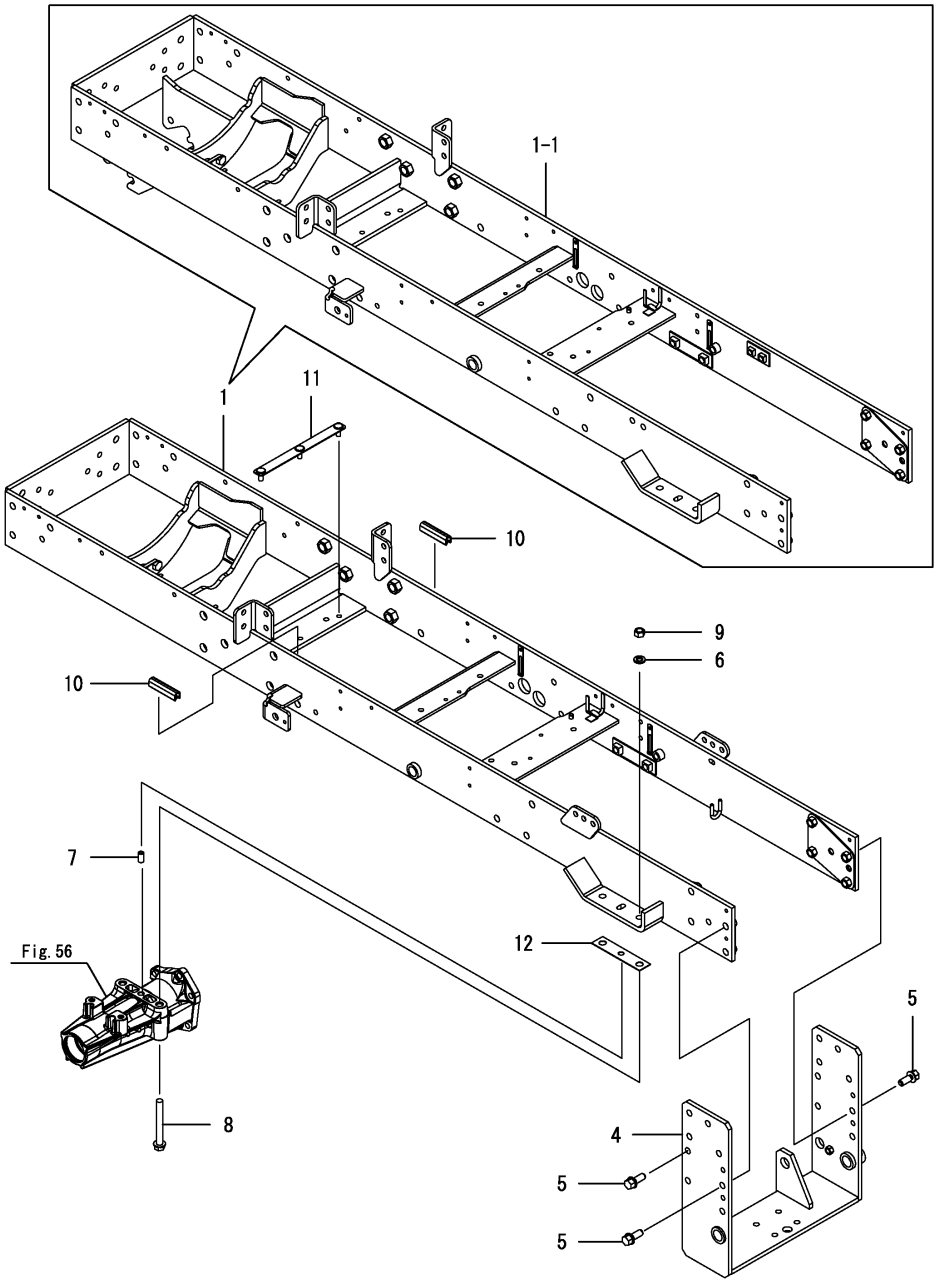

(A)=SC2400(CCY) (D)=
(B)= (E)=
(C)= (F)=

No.	Lev.	Parts No.	Description	Q'ty (A)	(B)	(C)	(D)	(E)	(F)	I	R
1	1	1A7880-10090	FRAME ASSY, SCT M	1							
1-1	1	1A7880-11090	FRAME ASSY, SCT M	1						S	
	(A=F010101)										
4	1	1A7880-10500	FRAME ASSY, LINK	1							
5	1	1A6770-85920	BOLT, M12X30	8							
6	1	22217-120000	WASHER, SPRING 12	4							
7	1	22351-100020	PIN, SPRING 10.0X20	2							
8	1	26106-121002	BOLT M12X100	4							
9	1	26716-120002	NUT, M12	4							
10	1	1A7880-10410	TRIM, 9.5tX70	2						Z	
	(A=FZZZZZ)										
11	1	1A7880-10430	PLATE, BOLT	1							
12	1	1A7880-10040	SHIM, T=1.2	2						Z	
	(A=F000226)										

N:Old $\xleftarrow[\text{No}]{\text{Yes}}$ New, Q:Old $\xleftarrow[\text{Yes}]{\text{No}}$ New, R:Old $\xleftarrow[\text{Yes}]{\text{Yes}}$ New, S:Old $\xleftarrow[\text{No}]{\text{No}}$ New, W:Add, Z:Discontinued, F:Interchangeable by set, K:Q'ty Change

Copyright (C) YANMAR CO., LTD. All RightsReserved.

Fig.8. ENGINE MOUNT

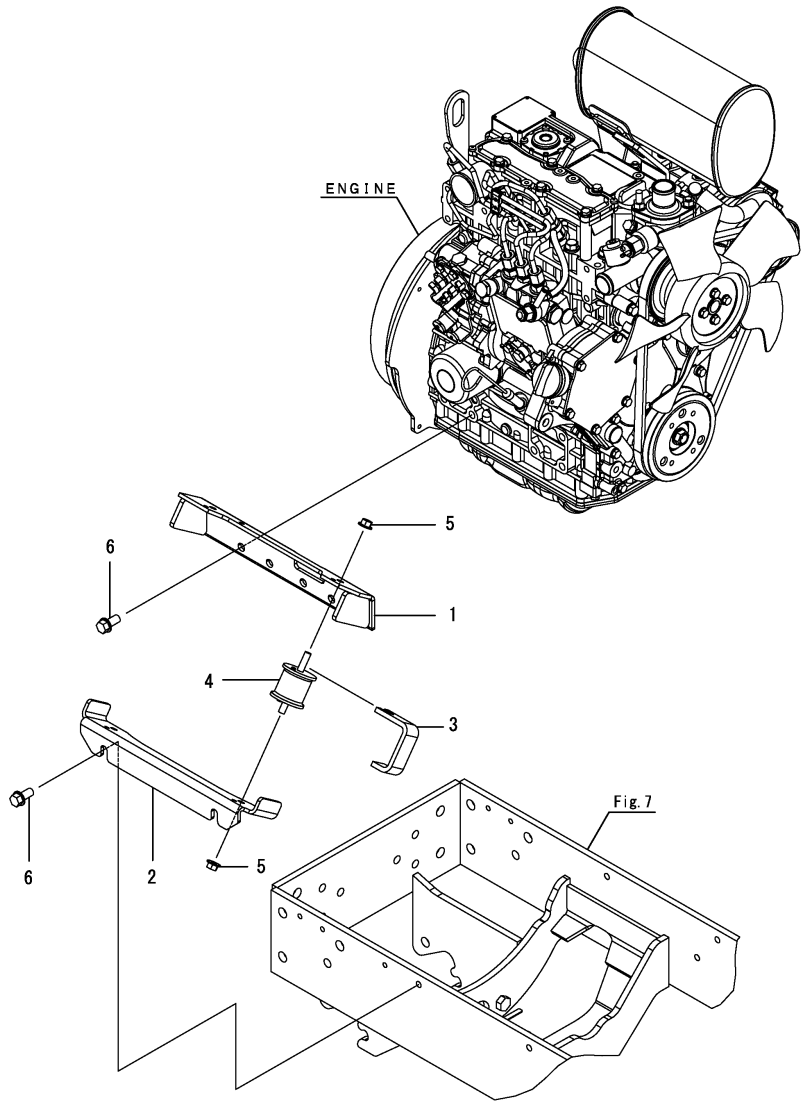

(A)=SC2400(CCY) (D)=
(B)= (E)=
(C)= (F)=

No.	Lev.	Parts No.	Description	Q'ty (A)	(B)	(C)	(D)	(E)	(F)	I	R
1	1	1A7880-10800	STAY ASSY, MOUNT E	2							
2	1	1A7880-10900	STAY, MOUNT FRAME	2							
3	1	1A7880-10950	STOPPER	2							
4	1	1A7130-11790	RUBBER, MOUNT	4							
5	1	194990-22140	NUT, M8	8							
6	1	26106-100202	BOLT, M10X 20 PLATED	10							

Remarks
*Serial No.
Up to F020100 refer to this item.
From F020101 refer to Fig.113.

N:Old $\overset{\text{Yes}}{\underset{\text{No}}{\leftrightarrows}}$ New, Q:Old $\overset{\text{No}}{\underset{\text{Yes}}{\leftrightarrows}}$ New, R:Old $\overset{\text{Yes}}{\underset{\text{Yes}}{\leftrightarrows}}$ New, S:Old $\overset{\text{No}}{\underset{\text{No}}{\leftrightarrows}}$ New, W:Add, Z:Discontinued, F:Interchangeable by set, K:Q'ty Change

Copyright (C) YANMAR CO., LTD. All RightsReserved.

Fig.113. (8A)ENGINE MOUNT

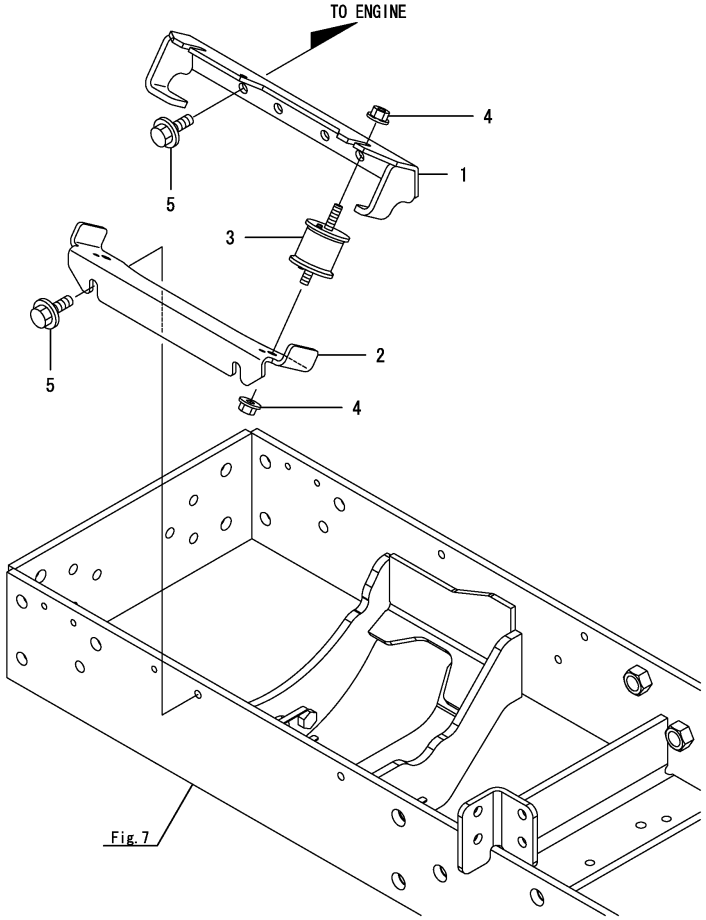

(A)=SC2400(CCY) (D)=
(B)= (E)=
(C)= (F)=

No.	Lev.	Parts No.	Description	Q'ty (A)	(B)	(C)	(D)	(E)	(F)	I	R
1	1	1A7882-10800	STAY ASSY, MOUNT E	2							
2	1	1A7882-10900	STAY, MOUNT FRAME	2							
3	1	1A7130-11790	RUBBER, MOUNT	4							
4	1	194990-22140	NUT, M8	8							
5	1	26106-100202	BOLT, M10X 20 PLATED	10							

Remarks
*Serial No.
Up to F020100 refer to Fig.8.
From F020101 refer to this item.

N:Old $\xleftarrow[\text{No}]{\text{Yes}}$ New, Q:Old $\xleftarrow[\text{Yes}]{\text{No}}$ New, R:Old $\xleftarrow[\text{Yes}]{\text{Yes}}$ New, S:Old $\xleftarrow[\text{No}]{\text{No}}$ New, W:Add, Z:Discontinued, F:Interchangeable by set, K:Q'ty Change

Copyright (C) YANMAR CO., LTD. All RightsReserved.

Fig.9. CENTER PIN

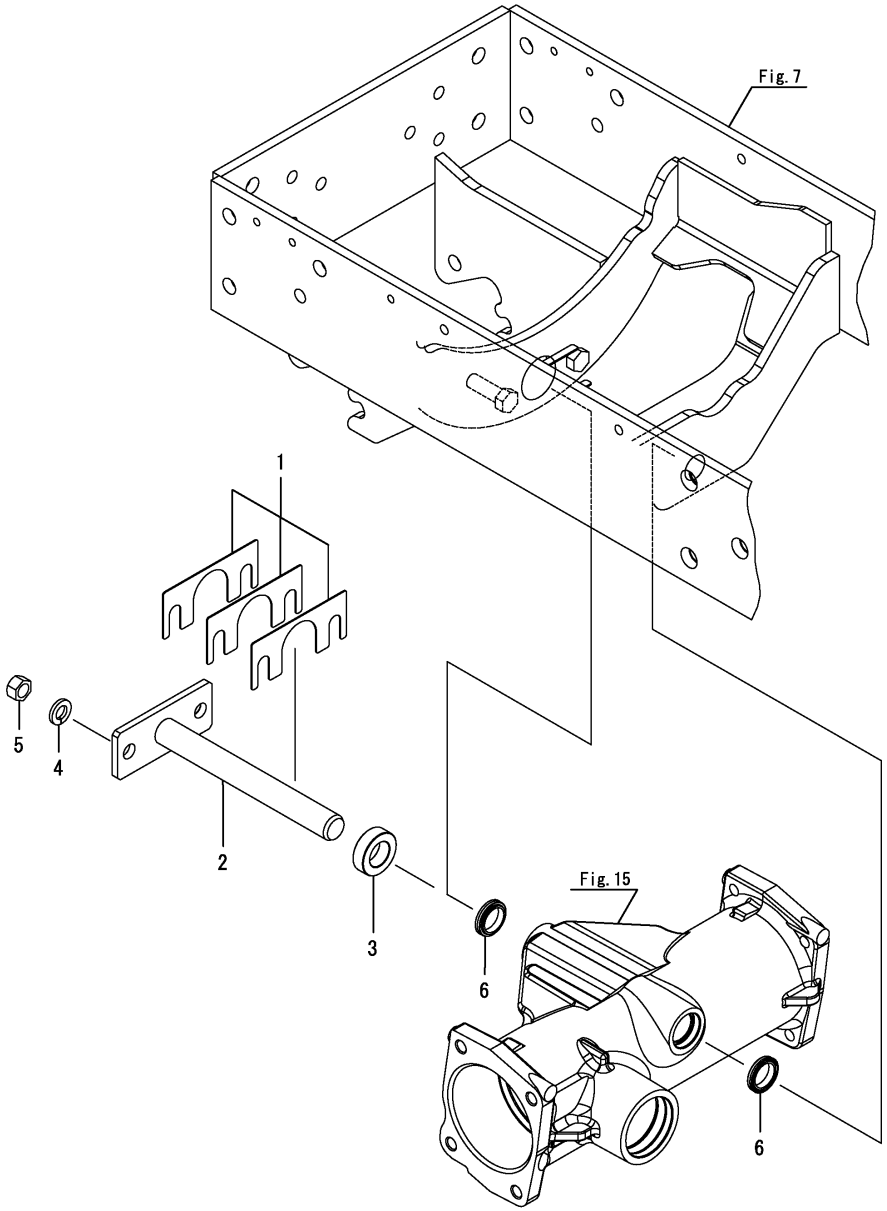

(A)=SC2400(CCY) (D)=
(B)= (E)=
(C)= (F)=

No.	Lev.	Parts No.	Description	Q'ty (A)	(B)	(C)	(D)	(E)	(F)	I	R
1	1	198165-11500	SHIM SET, CENTER PIN	1							
2	1	1A7880-11510	PIN ASSY, CENTER	1							
3	1	1A7880-11550	COLLAR, 22X38X11.5	1							
3-1	1	1A7880-11551	COLLAR, 22X38X12.5	1						N	
	(A=F003260)										
4	1	22217-120000	WASHER, SPRING 12	2							
5	1	26716-120002	NUT, M12	2							
6	1	1A7880-11560	SEAL, DUST 22X30X6	2							

N:Old $\xleftrightarrow[\text{No}]{\text{Yes}}$ New, Q:Old $\xleftrightarrow[\text{Yes}]{\text{No}}$ New, R:Old $\xleftrightarrow[\text{Yes}]{\text{Yes}}$ New, S:Old $\xleftrightarrow[\text{No}]{\text{No}}$ New, W:Add, Z:Discontinued, F:Interchangeable by set, K:Q'ty Change

Copyright (C) YANMAR CO., LTD. All RightsReserved.

Fig.10. TIE ROD

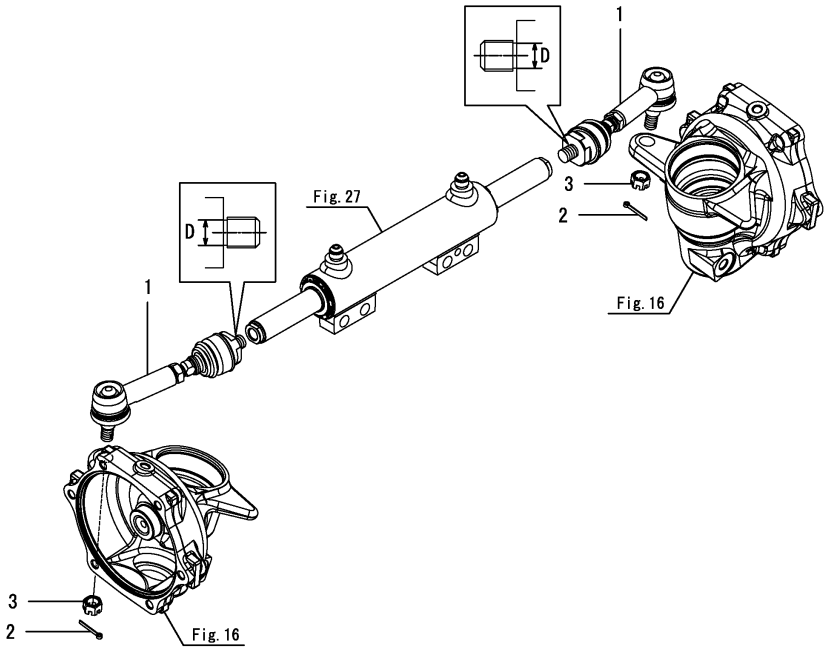

(A)=SC2400(CCY) (D)=
(B)= (E)=
(C)= (F)=

No.	Lev.	Parts No.	Description	Q'ty (A)	(B)	(C)	(D)	(E)	(F)	I	R
1	1	1A7880-12301	TIE-ROD ASSY, 132	2							
1-1	1	1A7880-12302	TIE-ROD ASSY, 132	2						S	1
	(A=F000300)										
2	1	22417-320250	PIN, COTTER 3.2X25	2							
3	1	194730-57242	NUT, CASTLE M12	2							

Remarks
(1)D=Ref.No.1 11.5M/M,1-1 12.5M/M.

N:Old $\xleftrightarrow[\text{No}]{\text{Yes}}$ New, Q:Old $\xleftrightarrow[\text{Yes}]{\text{No}}$ New, R:Old $\xleftrightarrow[\text{Yes}]{\text{Yes}}$ New, S:Old $\xleftrightarrow[\text{No}]{\text{No}}$ New, W:Add, Z:Discontinued, F:Interchangeable by set, K:Q'ty Change

Copyright (C) YANMAR CO., LTD. All RightsReserved.

Fig.11. DRIVE PINION

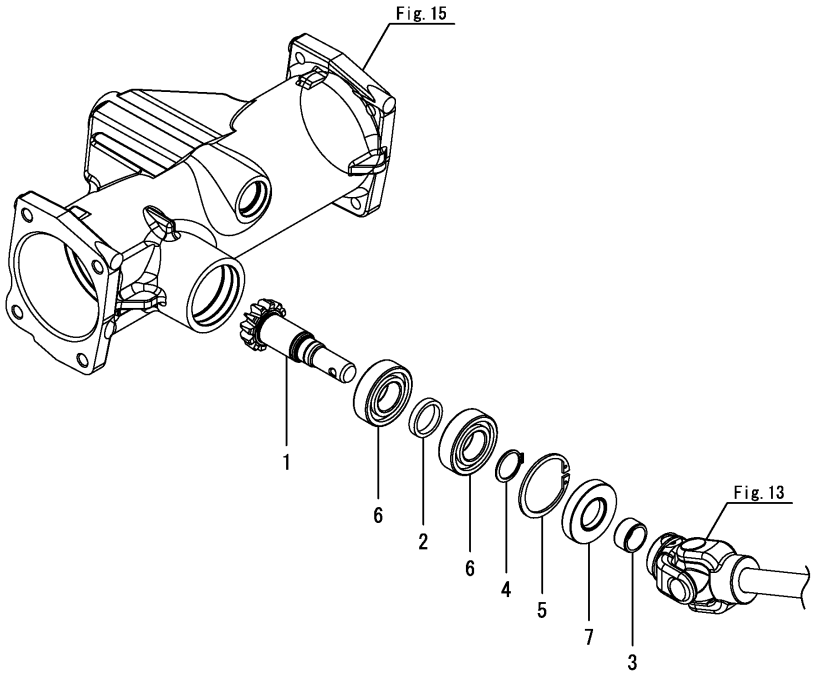

(A)=SC2400(CCY) (D)=
(B)= (E)=
(C)= (F)=

No.	Lev.	Parts No.	Description	Q'ty (A)	(B)	(C)	(D)	(E)	(F)	I	R
1	1	1A7130-13120	SHAFT, INPUT	1							
2	1	1A7130-13130	COLLAR, 30X25X5.7	1							
3	1	1E4760-73240	SLEEVE 202513	1							
4	1	22242-000240	RING, 24	1							
5	1	22252-000520	RING, 52	1							
6	1	24101-062054	BEARING, BALL 6205	2							
7	1	24421-255210	SEAL, OIL TC255210	1							

N:Old $\xleftrightarrow[\text{No}]{\text{Yes}}$ New, Q:Old $\xleftrightarrow[\text{Yes}]{\text{No}}$ New, R:Old $\xleftrightarrow[\text{Yes}]{\text{Yes}}$ New, S:Old $\xleftrightarrow[\text{No}]{\text{No}}$ New, W:Add, Z:Discontinued, F:Interchangeable by set, K:Q'ty Change

Copyright (C) YANMAR CO., LTD. All RightsReserved.

Fig.12. DIFF GEAR

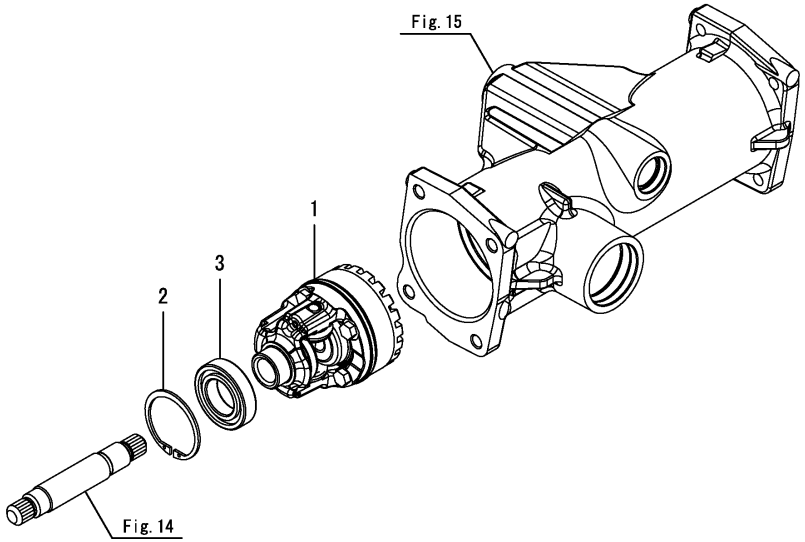

(A)=SC2400(CCY) (D)=
(B)= (E)=
(C)= (F)=

No.	Lev.	Parts No.	Description	Q'ty (A)	(B)	(C)	(D)	(E)	(F)	I	R
1	1	1A7880-13150	GEAR ASSY	1							
2	1	22252-000550	RING, 55	1							
3	1	24101-060064	BEARING, BALL 6006	1							

N:Old $\xleftrightarrow[\text{No}]{\text{Yes}}$ New, Q:Old $\xleftrightarrow[\text{Yes}]{\text{No}}$ New, R:Old $\xleftrightarrow[\text{Yes}]{\text{Yes}}$ New, S:Old $\xleftrightarrow[\text{No}]{\text{No}}$ New, W:Add, Z:Discontinued, F:Interchangeable by set, K:Q'ty Change

Copyright (C) YANMAR CO., LTD. All RightsReserved.

Fig.13. PROP SHAFT

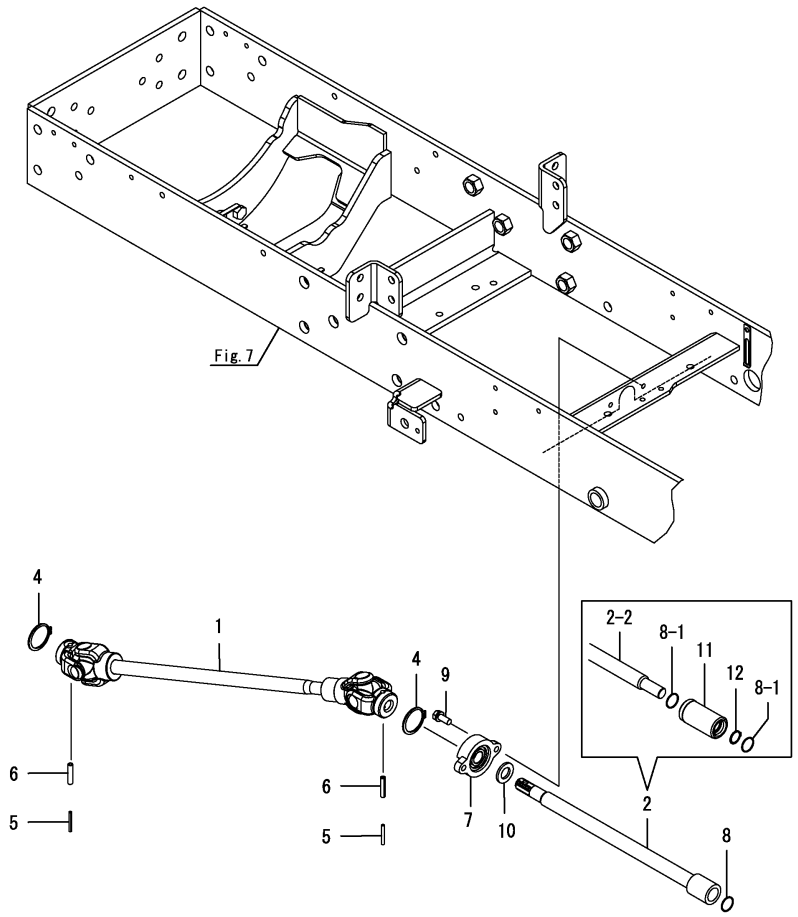

(A)=SC2400(CCY) (D)=
(B)= (E)=
(C)= (F)=

No.	Lev.	Parts No.	Description	Q'ty (A)	(B)	(C)	(D)	(E)	(F)	I	R
1	1	1A7880-13310	SHAFT ASSY, F	1							
2	1	1A7880-13410	SHAFT ASSY, R	1							
2-1	1	1A7880-13411	SHAFT ASSY, R	1						N	
	(A=F001172)										
2-2	1	1A7880-13470	SHAFT, PROPELLER R	1						N	1
	(A=F002988)										
4	1	22242-000360	RING, 36	2							
5	1	22351-035032	PIN, SPRING 3.5X32	2							
6	1	22351-060032	PIN, SPRING 6.0X32	2							
7	1	1A7500-13360	BEARING, MIDDLE	1							
8	1	24311-000160	O-RING, 1AP16.0	1							
8-1	1	24311-000160	O-RING, 1AP16.0	2						K	
	(A=F002988)										
9	1	26013-080202	BOLT, M8X 20	2							
10	1	22137-160000	WASHER, 16	1						Z	
	(A=F002988)										
11	1	1A7880-13480	COLLAR, SPLINE	1						W	1
	(A=F002988)										
12	1	22252-000150	RING, 15	1						W	
	(A=F002988)										

Remarks
(1)Ref.No.2-1 is interchangeable
with a set of 2-2 & 11.

N:Old $\overset{\text{Yes}}{\underset{\text{No}}{\leftrightarrows}}$ New, Q:Old $\overset{\text{No}}{\underset{\text{Yes}}{\leftrightarrows}}$ New, R:Old $\overset{\text{Yes}}{\underset{\text{Yes}}{\leftrightarrows}}$ New, S:Old $\overset{\text{No}}{\underset{\text{No}}{\leftrightarrows}}$ New, W:Add, Z:Discontinued, F:Interchangeable by set, K:Q'ty Change

Copyright (C) YANMAR CO., LTD. All RightsReserved.

Fig.14. FRONT SHAFT 1

(A)=SC2400(CCY) (D)=
(B)= (E)=
(C)= (F)=

No.	Lev.	Parts No.	Description	Q'ty (A)	(B)	(C)	(D)	(E)	(F)	I	R
1	1	1A7880-13510	SHAFT, FRONT 1ST L	1							
2	1	1A7880-13520	SHAFT, FRONT 1ST R	1							
3	1	1A7880-13530	GEAR, BEVEL 9	2							
4	1	22252-000550	RING, 55	2							
5	1	24101-060064	BEARING, BALL 6006	2							

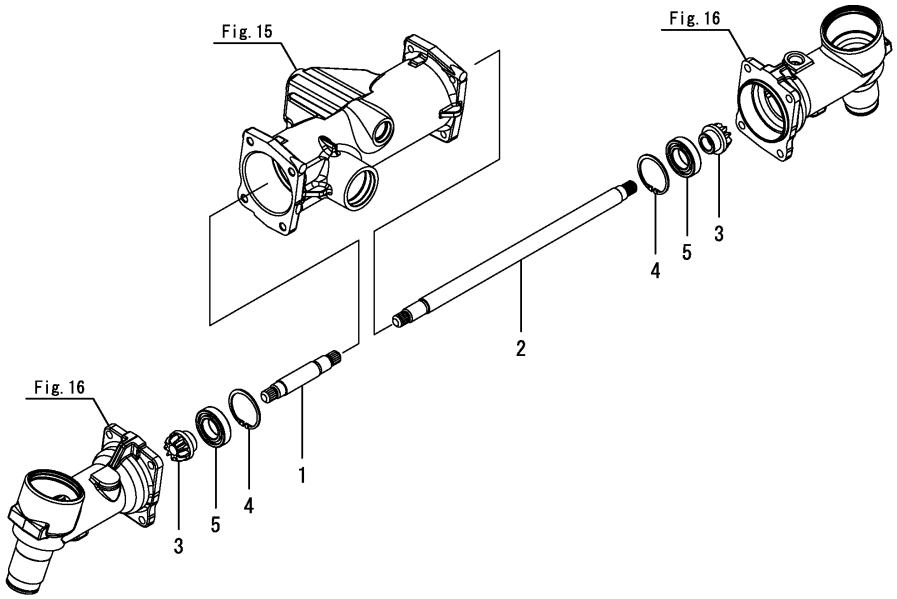

N:Old $\xleftrightarrow[\text{No}]{\text{Yes}}$ New, Q:Old $\xleftrightarrow[\text{Yes}]{\text{No}}$ New, R:Old $\xleftrightarrow[\text{Yes}]{\text{Yes}}$ New, S:Old $\xleftrightarrow[\text{No}]{\text{No}}$ New, W:Add, Z:Discontinued, F:Interchangeable by set, K:Q'ty Change

Copyright (C) YANMAR CO., LTD. All RightsReserved.

Fig.15. CASE FRONT AXLE

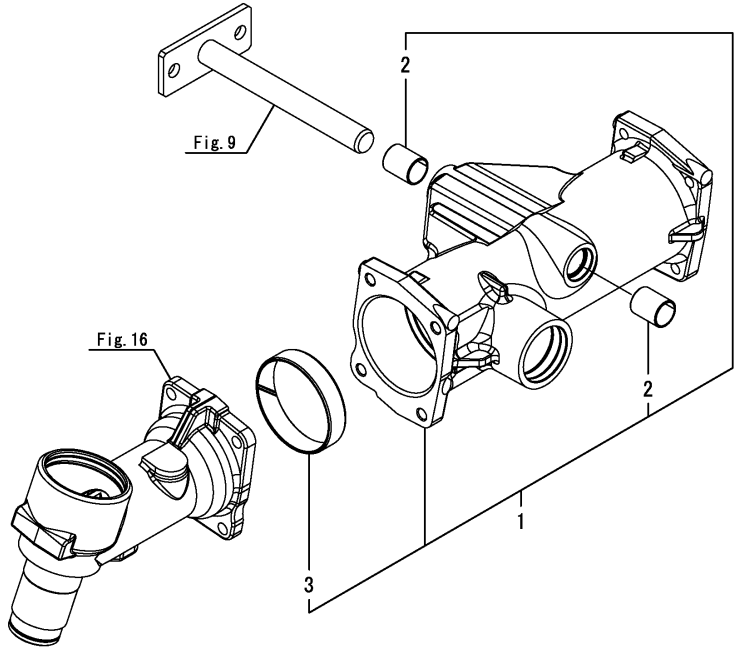

(A)=SC2400(CCY) (D)=
(B)= (E)=
(C)= (F)=

No.	Lev.	Parts No.	Description	Q'ty (A)	(B)	(C)	(D)	(E)	(F)	I	R
1	1	1A7880-13600	HOUSING, FRONT AXLE	1							
2	2	1A7880-11540	BUSH, 22X25X30	2							
3	2	1A7130-13270	BUSH, 85X90X20	1							

N:Old ←Yes/No→ New, Q:Old ←No/Yes→ New, R:Old ←Yes/Yes→ New, S:Old ←No/No→ New, W:Add, Z:Discontinued, F:Interchangeable by set, K:Q'ty Change

Copyright (C) YANMAR CO., LTD. All RightsReserved.

Fig.16. CASE FRONT GEAR

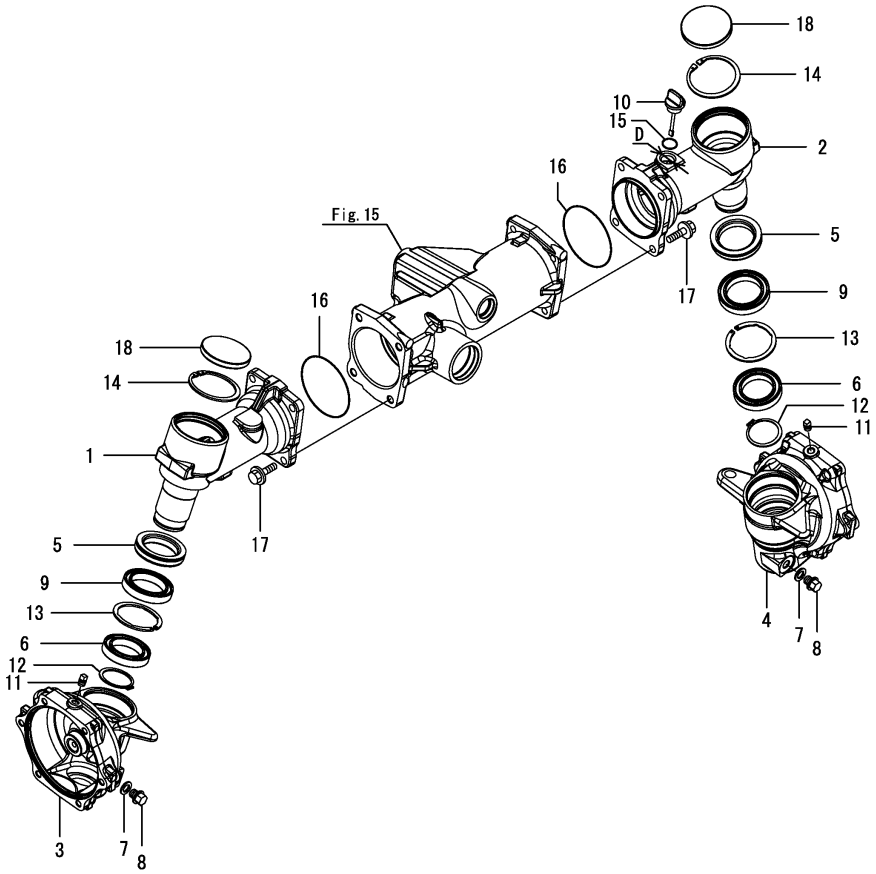

(A)=SC2400(CCY) (D)=
(B)= (E)=
(C)= (F)=

No.	Lev.	Parts No.	Description	Q'ty (A)	(B)	(C)	(D)	(E)	(F)	I	R
1	1	1A7880-13710	CASE, FRONT GEAR L	1							
2	1	1A7880-13720	CASE R,FRONT GEAR	1							
2-1	1	1A7880-13721	CASE, FRONT GEAR R	1						S	1
	(A=F001607)										
3	1	1A7880-13730	BOX, GEAR L	1							
4	1	1A7880-13740	BOX, GEAR R	1							
5	1	1A7880-13780	SEAL, QLN50721013	2							
6	1	194951-14440	BEARING, 6909	2							
7	1	198165-24440	GASKET, 20X12X2	2							
8	1	198165-24490	BOLT, M12X12	2							
9	1	194105-26430	BEARING, BALL 6910	2							
10	1	1C6050-31250	GAUGE, OIL LEVEL	1							
11	1	194151-36670	PLUG, PF02	2							
12	1	22242-000450	RING, 45	2							
13	1	22252-000681	RING, 68	2							
14	1	22252-000720	RING, 72	2							
15	1	1A7880-13770	O-RING, 18	1							
15-1	1	24311-000180	O-RING, 1AP18.0	1						S	
	(A=F001607)										
16	1	24341-000900	O-RING, 1AS90.0	2							
16-1	1	24341-000850	O-RING, 1AS85.0	2						N	
	(A=FXXXXX)										
17	1	26106-100302	BOLT, M10X 30 PLATED	8							
18	1	27260-720000	PLUG, 72	2							

Remarks
(1)D=Ref.No.2 25M/M,2-1 23M/M.

N:Old $\overset{\text{Yes}}{\underset{\text{No}}{\leftrightarrow}}$ New, Q:Old $\overset{\text{No}}{\underset{\text{Yes}}{\leftrightarrow}}$ New, R:Old $\overset{\text{Yes}}{\underset{\text{Yes}}{\leftrightarrow}}$ New, S:Old $\overset{\text{No}}{\underset{\text{No}}{\leftrightarrow}}$ New, W:Add, Z:Discontinued, F:Interchangeable by set, K:Q'ty Change

Copyright (C) YANMAR CO., LTD. All RightsReserved.

Fig.17. FRONT SHAFT 2

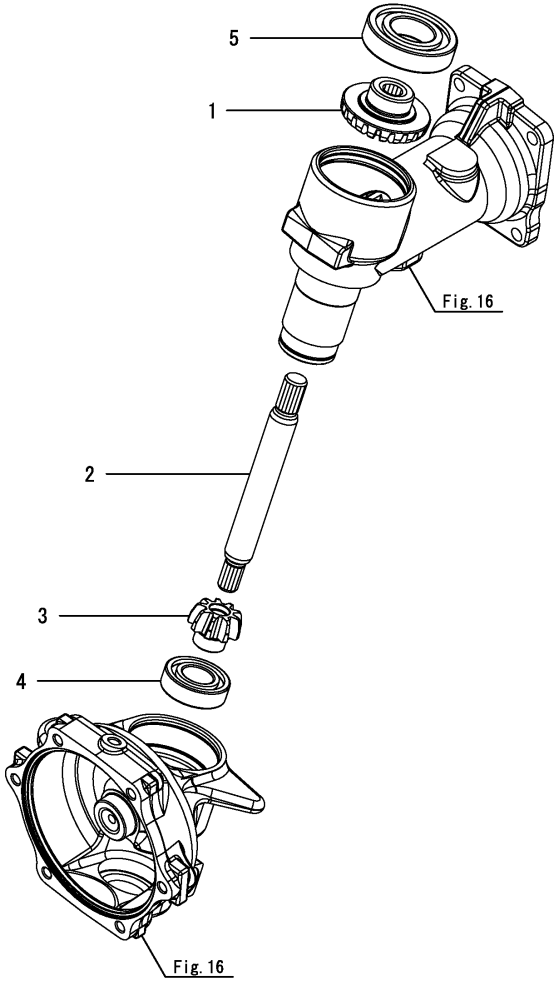

(A)=SC2400(CCY) (D)=
(B)= (E)=
(C)= (F)=

No.	Lev.	Parts No.	Description	Q'ty (A)	(B)	(C)	(D)	(E)	(F)	I	R
1	1	1A7880-13540	GEAR, BEVEL 20T	2							
2	1	1A7880-13810	SHAFT, FRONT 2ND	2							
3	1	1A7880-13820	PINION, FINAL	2							
4	1	24101-062054	BEARING, BALL 6205	2							
5	1	24101-062074	BEARING, BALL 6207	2							

N:Old $\xleftarrow[\text{No}]{\text{Yes}}$ New, Q:Old $\xleftarrow[\text{Yes}]{\text{No}}$ New, R:Old $\xleftarrow[\text{Yes}]{\text{Yes}}$ New, S:Old $\xleftarrow[\text{No}]{\text{No}}$ New, W:Add, Z:Discontinued, F:Interchangeable by set, K:Q'ty Change

Copyright (C) YANMAR CO., LTD. All RightsReserved.

Fig.18. FRONT SPINDLE

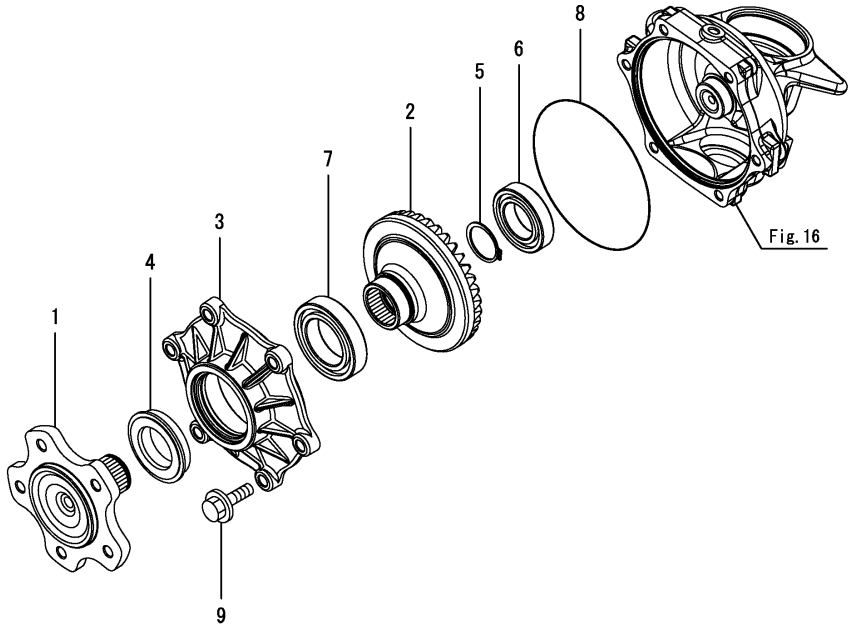

(A)=SC2400(CCY) (D)=
(B)= (E)=
(C)= (F)=

No.	Lev.	Parts No.	Description	Q'ty (A)	(B)	(C)	(D)	(E)	(F)	I	R
1	1	1A7880-14110	SPINDLE, FRONT	2							
2	1	1A7880-14120	GEAR, FINAL F	2							
3	1	1A7880-14130	CASE, FRONT BEARING	2							
4	1	1E8420-55430	SEAL, QLFY40X62X14	2							
5	1	22242-000340	RING, 34	2							
6	1	24101-060074	BEARING, BALL 6007	2							
7	1	24101-060094	BEARING, BALL 6009	2							
8	1	24321-001300	O-RING, 1AG130.0	2							
9	1	26106-100302	BOLT, M10X 30 PLATED	12							

N:Old $\xleftrightarrow[\text{No}]{\text{Yes}}$ New, Q:Old $\xleftrightarrow[\text{Yes}]{\text{No}}$ New, R:Old $\xleftrightarrow[\text{Yes}]{\text{Yes}}$ New, S:Old $\xleftrightarrow[\text{No}]{\text{No}}$ New, W:Add, Z:Discontinued, F:Interchangeable by set, K:Q'ty Change

Copyright (C) YANMAR CO., LTD. All RightsReserved.

Fig.19. COVER PROP SHAFT

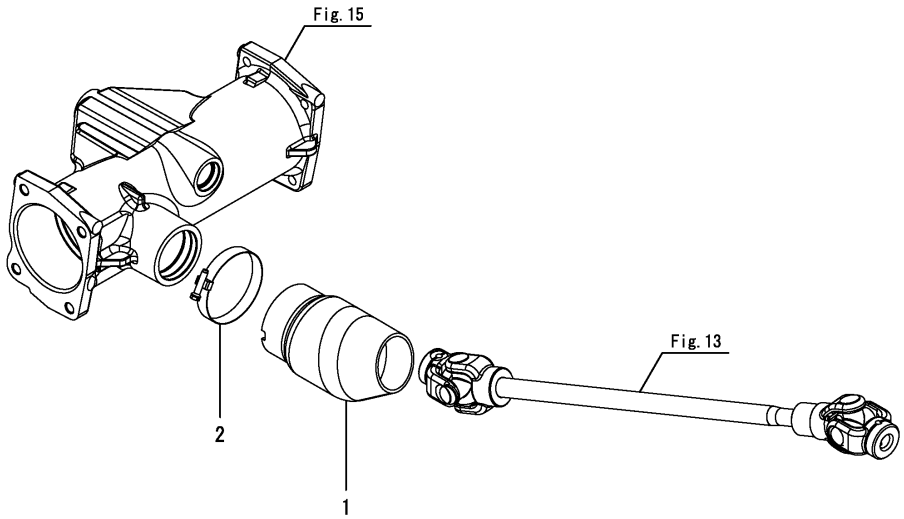

(A)=SC2400(CCY) (D)=
(B)= (E)=
(C)= (F)=

No.	Lev.	Parts No.	Description	Q'ty (A)	(B)	(C)	(D)	(E)	(F)	I	R
1	1	1A7880-14620	COVER, SHAFT	1							
2	1	23000-075000	CLAMP, 75	1							

N:Old ◄Yes/No► New, Q:Old ◄No/Yes► New, R:Old ◄Yes/Yes► New, S:Old ◄No/No► New, W:Add, Z:Discontinued, F:Interchangeable by set, K:Q'ty Change

Copyright (C) YANMAR CO., LTD. All RightsReserved.

Fig.20. FRONT TIRE R1

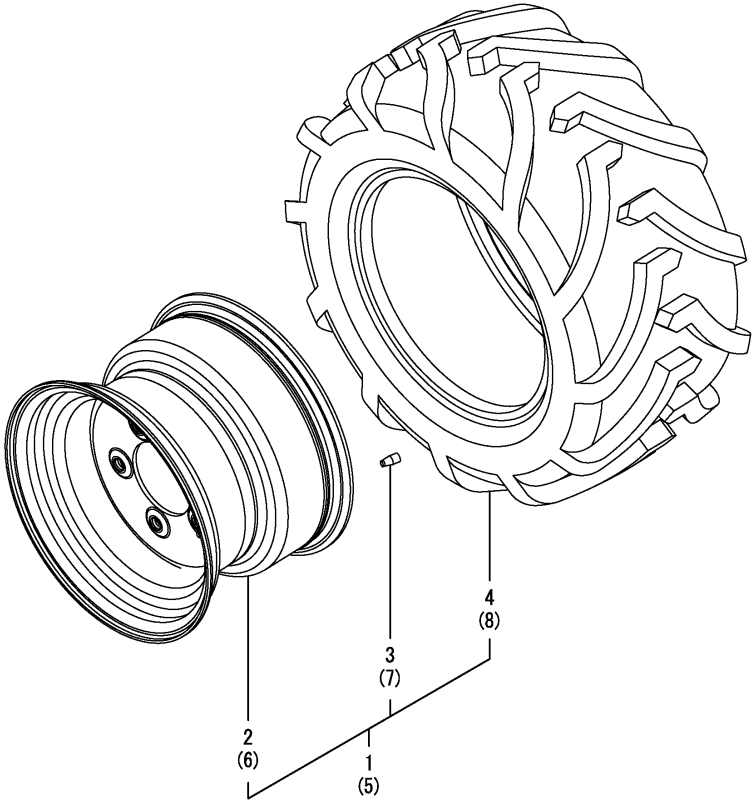

(A)=SC2400(CCY) (D)=
(B)= (E)=
(C)= (F)=

No.	Lev.	Parts No.	Description	Q'ty (A)	(B)	(C)	(D)	(E)	(F)	I	R
1	1	1A7880-14900	TIRE KIT, FRONT R1 L	1							
2	2	1A7880-14830	WHEEL, 10X7.0	1							
3	2	1A7880-14840	VALVE	1							
4	2	1A7880-14920	TIRE, 18X8.5-10 R1	1							
5	1	1A7880-14910	TIRE KIT, FRONT R1 R	1							
6	2	1A7880-14830	WHEEL, 10X7.0	1							
7	2	1A7880-14840	VALVE	1							
8	2	1A7880-14920	TIRE, 18X8.5-10 R1	1							

N:Old $\overset{\text{Yes}}{\underset{\text{No}}{\leftrightarrows}}$ New, Q:Old $\overset{\text{No}}{\underset{\text{Yes}}{\leftrightarrows}}$ New, R:Old $\overset{\text{Yes}}{\underset{\text{Yes}}{\leftrightarrows}}$ New, S:Old $\overset{\text{No}}{\underset{\text{No}}{\leftrightarrows}}$ New, W:Add, Z:Discontinued, F:Interchangeable by set, K:Q'ty Change

Copyright (C) YANMAR CO., LTD. All RightsReserved.

Fig.21. FRONT TIRE R3

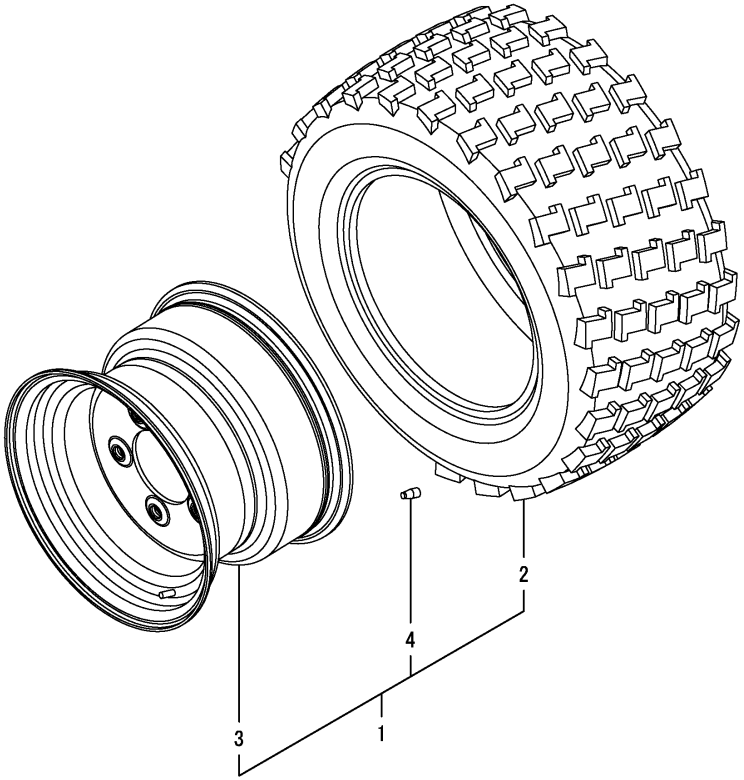

(A)=SC2400(CCY)
(B)=
(C)=
(D)=
(E)=
(F)=

No.	Lev.	Parts No.	Description	Q'ty (A)	(B)	(C)	(D)	(E)	(F)	I	R
1	1	1A7880-14700	TIRE KIT, FRONT R3	2							
2	2	1A7880-14710	TIRE, 18X8.5-10 R3	2							
3	2	1A7880-14830	WHEEL, 10X7.0	2							
4	2	1A7880-14840	VALVE	2							

N:Old $\xleftrightarrow[\text{No}]{\text{Yes}}$ New, Q:Old $\xleftrightarrow[\text{Yes}]{\text{No}}$ New, R:Old $\xleftrightarrow[\text{Yes}]{\text{Yes}}$ New, S:Old $\xleftrightarrow[\text{No}]{\text{No}}$ New, W:Add, Z:Discontinued, F:Interchangeable by set, K:Q'ty Change

Copyright (C) YANMAR CO., LTD. All RightsReserved.

Fig.22. FRONT TIRE R4

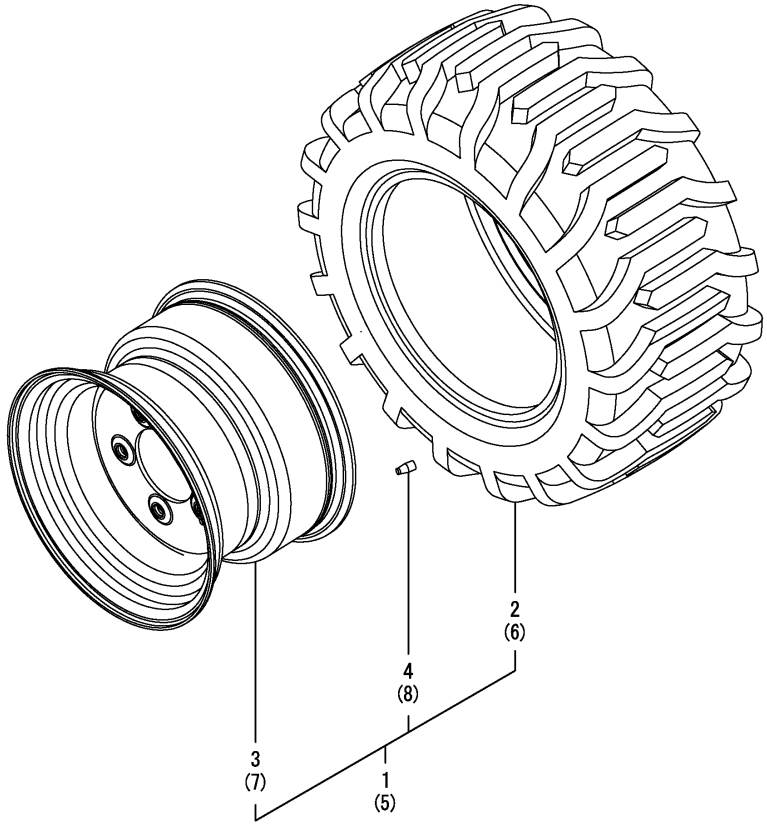

(A)=SC2400(CCY) (D)=
(B)= (E)=
(C)= (F)=

No.	Lev.	Parts No.	Description	Q'ty (A)	(B)	(C)	(D)	(E)	(F)	I	R
1	1	1A7880-14800	TIRE KIT, FRONT R4 L	1							
2	2	1A7880-14820	TIRE, 18X8.5-10 R4	1							
3	2	1A7880-14830	WHEEL, 10X7.0	1							
4	2	1A7880-14840	VALVE	1							
5	1	1A7880-14810	TIRE KIT, FRONT R4 R	1							
6	2	1A7880-14820	TIRE, 18X8.5-10 R4	1							
7	2	1A7880-14830	WHEEL, 10X7.0	1							
8	2	1A7880-14840	VALVE	1							

N:Old $\xleftarrow[\text{No}]{\text{Yes}}$ New, Q:Old $\xleftarrow[\text{Yes}]{\text{No}}$ New, R:Old $\xleftarrow[\text{Yes}]{\text{Yes}}$ New, S:Old $\xleftarrow[\text{No}]{\text{No}}$ New, W:Add, Z:Discontinued, F:Interchangeable by set, K:Q'ty Change

Copyright (C) YANMAR CO., LTD. All RightsReserved.

Fig.23. HUB BOLT

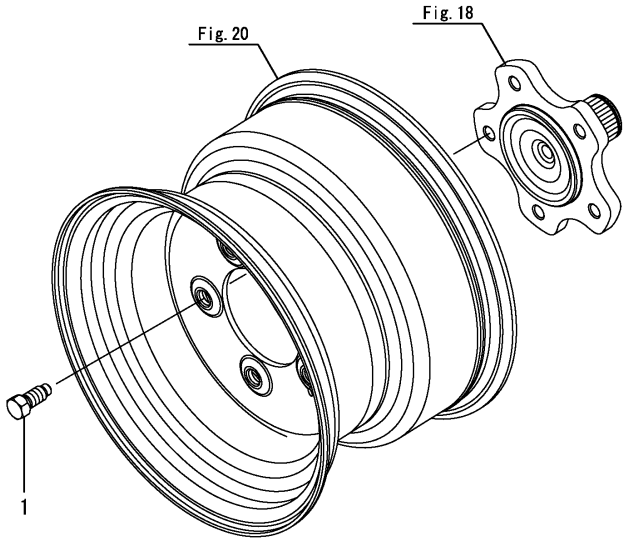

(A)=SC2400(CCY) (D)=
(B)= (E)=
(C)= (F)=

No.	Lev.	Parts No.	Description	Q'ty (A)	(B)	(C)	(D)	(E)	(F)	I	R
1	1	1A7880-34180	BOLT, 7/16-20UNF	10							

N:Old ◄Yes/No► New, Q:Old ◄No/Yes► New, R:Old ◄Yes/Yes► New, S:Old ◄No/No► New, W:Add, Z:Discontinued, F:Interchangeable by set, K:Q'ty Change

Copyright (C) YANMAR CO., LTD. All RightsReserved.

Fig.24. STEERING WHEEL

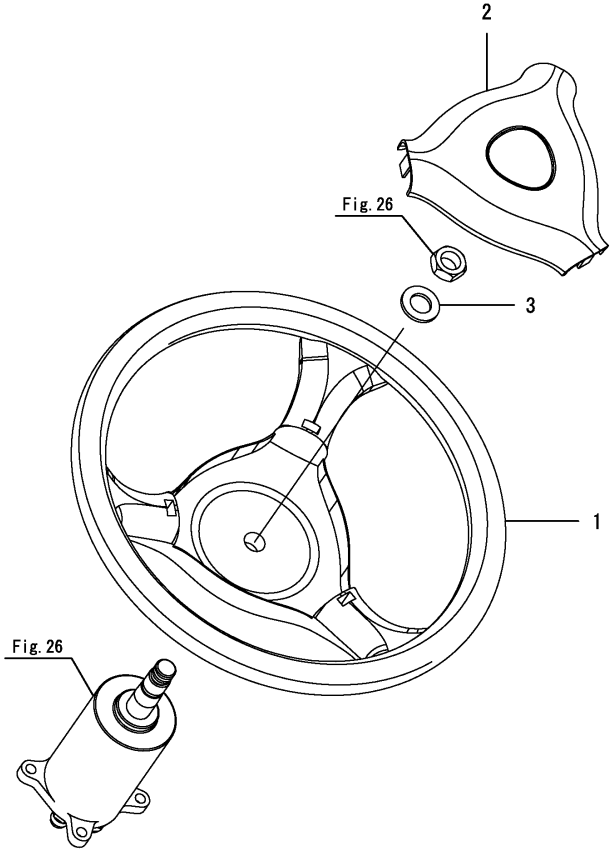

(A)=SC2400(CCY) (D)=
(B)= (E)=
(C)= (F)=

No.	Lev.	Parts No.	Description	Q'ty (A)	(B)	(C)	(D)	(E)	(F)	I	R
1	1	1A7880-15700	WHEEL, STEERING	1							
2	1	1A7880-15740	CAP, STEERING WHEEL	1							
3	1	22137-160000	WASHER, 16	1							

N:Old $\xleftarrow[\text{No}]{\text{Yes}}$ New, Q:Old $\xleftarrow[\text{Yes}]{\text{No}}$ New, R:Old $\xleftarrow[\text{Yes}]{\text{Yes}}$ New, S:Old $\xleftarrow[\text{No}]{\text{No}}$ New, W:Add, Z:Discontinued, F:Interchangeable by set, K:Q'ty Change

Copyright (C) YANMAR CO., LTD. All RightsReserved.

Fig.25. COLUMN BRACKET

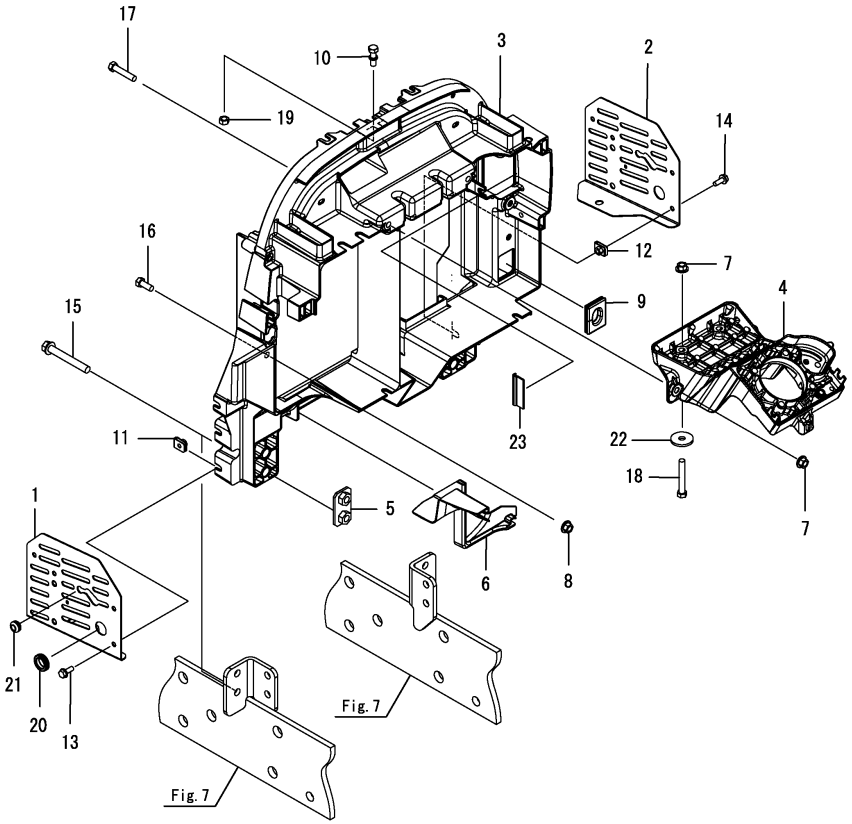

(A)=SC2400(CCY) (D)=
(B)= (E)=
(C)= (F)=

No.	Lev.	Parts No.	Description	Q'ty (A)	(B)	(C)	(D)	(E)	(F)	I	R
1	1	1A7880-05150	COVER ASSY, BELT L	1							
2	1	1A7880-05190	COVER, BELT R	1							
3	1	1A7880-15110	BRACKET,COLUMN	1							
3-1	1	1A7880-15100	BRACKET, COLUMN	1						N	
	(A=FXXXXX)										
4	1	1A7880-15120	BRACKET, STEERING	1							
5	1	1A7880-15130	STAY, COLUMN	2							
6	1	1A7880-15160	BOOT	1							
7	1	194990-22140	NUT, M8	4							
8	1	194990-22140	NUT, M8	2							
9	1	1A7880-51710	GROMMET, HARNESS	1							
10	1	1A7880-61810	BOLT, STEPPED M8	1							
11	1	198071-61890	NUT, SPEED M6	2							
12	1	198071-61890	NUT, SPEED M6	2							
13	1	26106-060162	BOLT, M6X 16 PLATED	2							
14	1	26106-060162	BOLT, M6X 16 PLATED	2							
15	1	26106-100752	BOLT, M10X 75 PLATED	4							
16	1	26116-080202	BOLT, M8X 20 PLATED	2							
17	1	26116-080402	BOLT, M8X 40 PLATED	2							
18	1	26116-080552	BOLT, M8X 55 PLATED	2							
18-1	1	26106-080652	BOLT, M8X 65 PLATED	2						N	
	(A=F000344)										
19	1	26716-080002	NUT, M8	1							
20	1	29311-162000	GROMET, 16.0X2	1							
21	1	198071-58810	GROMMET, 8	1							
22	1	1C6140-47210	WASHER, 9X32X3.2	2						W	
	(A=F000344)										
23	1	198093-84810	SEAL, FENDER	1						W	
	(A=F000344)										

Remarks
*Serial No.
Up to F020100 refer to this item.
From F020101 refer to Fig.114.

N:Old $\frac{\text{Yes}}{\text{No}}$ New, Q:Old $\frac{\text{No}}{\text{Yes}}$ New, R:Old $\frac{\text{Yes}}{\text{Yes}}$ New, S:Old $\frac{\text{No}}{\text{No}}$ New, W:Add, Z:Discontinued, F:Interchangeable by set, K:Q'ty Change

Copyright (C) YANMAR CO., LTD. All RightsReserved.

Fig.114. (25A)COLUMN BRACKET

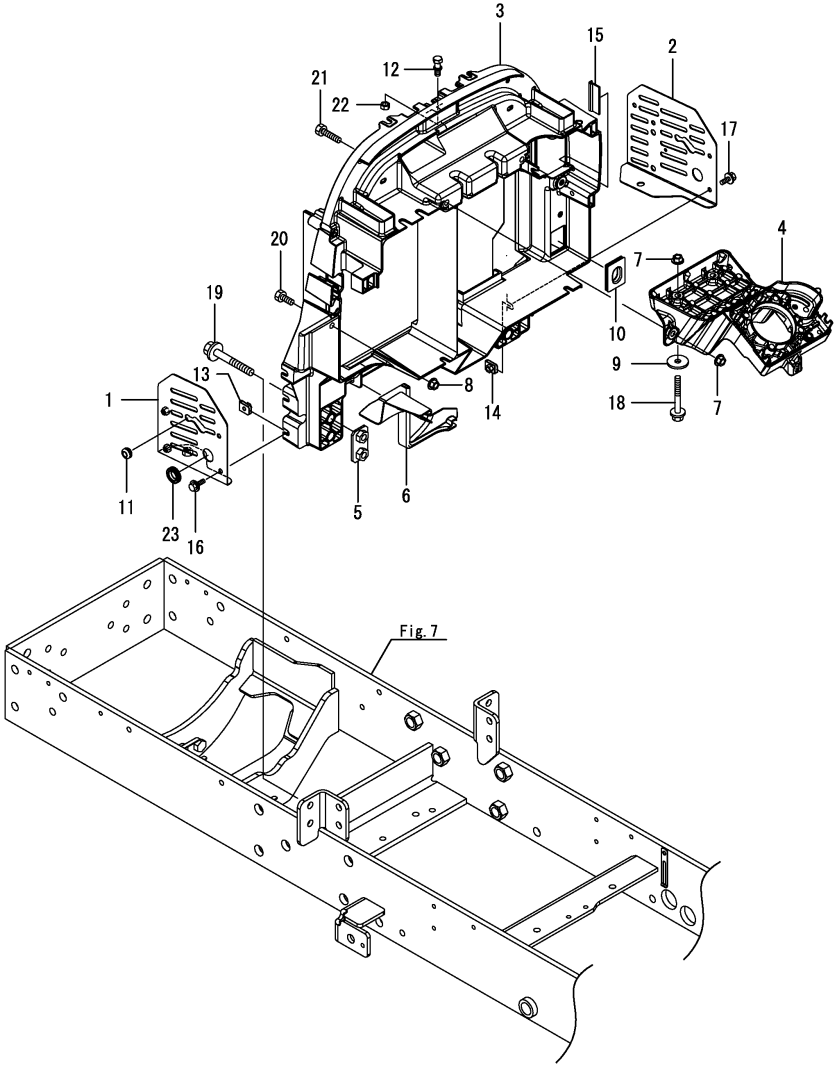

(A)=SC2400(CCY) (D)=
(B)= (E)=
(C)= (F)=

No.	Lev.	Parts No.	Description	Q'ty (A)	(B)	(C)	(D)	(E)	(F)	I	R
1	1	1A7882-05150	COVER ASSY, BELT L	1							
2	1	1A7880-05190	COVER, BELT R	1							
3	1	1A7880-15100	BRACKET, COLUMN	1							
4	1	1A7880-15120	BRACKET, STEERING	1							
5	1	1A7880-15130	STAY, COLUMN	2							
6	1	1A7880-15160	BOOT	1							
7	1	194990-22140	NUT, M8	4							
8	1	194990-22140	NUT, M8	2							
9	1	1C6140-47210	WASHER, 9X32X3.2	2							
10	1	1A7880-51710	GROMMET, HARNESS	1							
11	1	198071-58810	GROMMET, 8	1							
12	1	1A7880-61810	BOLT, STEPPED M8	1							
13	1	198071-61890	NUT, SPEED M6	2							
14	1	198071-61890	NUT, SPEED M6	2							
15	1	198093-84810	SEAL, FENDER	1							
16	1	26106-060162	BOLT, M6X 16 PLATED	2							
17	1	26106-060162	BOLT, M6X 16 PLATED	2							
18	1	26106-080652	BOLT, M8X 65 PLATED	2							
19	1	26106-100752	BOLT, M10X 75 PLATED	4							
20	1	26116-080202	BOLT, M8X 20 PLATED	2							
21	1	26116-080402	BOLT, M8X 40 PLATED	2							
22	1	26716-080002	NUT, M8	1							
23	1	29311-162000	GROMET, 16.0X2	1							

Remarks
*Serial No.
Up to F020100 refer to Fig.25.
From F020101 refer to this item.

N:Old $\xleftrightarrow[\text{No}]{\text{Yes}}$ New, Q:Old $\xleftrightarrow[\text{Yes}]{\text{No}}$ New, R:Old $\xleftrightarrow[\text{Yes}]{\text{Yes}}$ New, S:Old $\xleftrightarrow[\text{No}]{\text{No}}$ New, W:Add, Z:Discontinued, F:Interchangeable by set, K:Q'ty Change

Copyright (C) YANMAR CO., LTD. All RightsReserved.

Fig.26. PST VALVE

(A)=SC2400(CCY) (D)=
(B)= (E)=
(C)= (F)=

No.	Lev.	Parts No.	Description	Q'ty (A)	(B)	(C)	(D)	(E)	(F)	I	R
1	1	1A7880-17300	VALVE ASSY, STEERING	1							
1B	2	1A7880-17320	NUT, 5/8-18 UNF	1							
2	1	26106-080302	BOLT, M8X 30 PLATED	4							

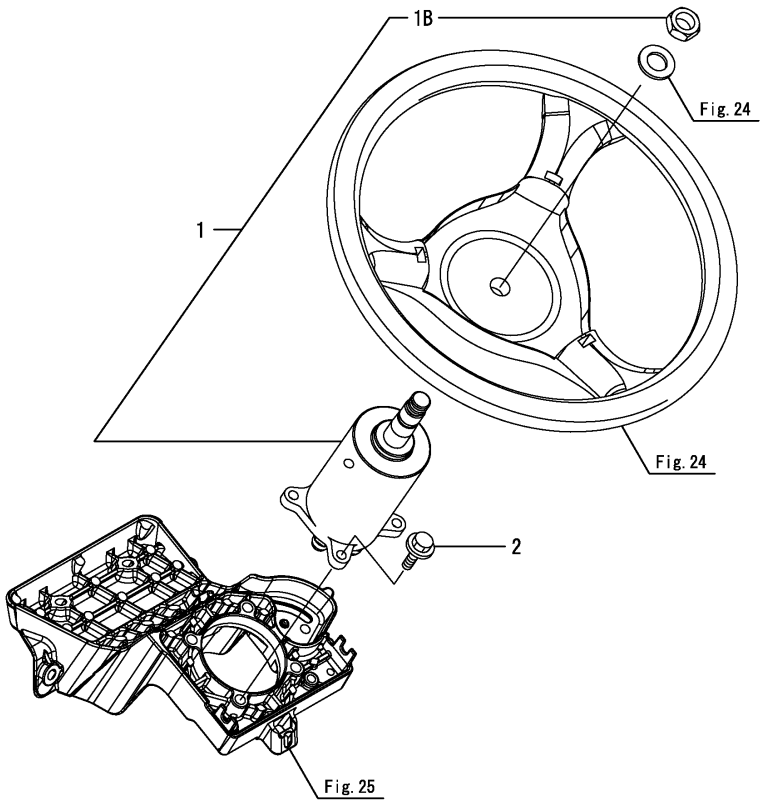

N:Old $\xleftrightarrow[\text{No}]{\text{Yes}}$ New, Q:Old $\xleftrightarrow[\text{Yes}]{\text{No}}$ New, R:Old $\xleftrightarrow[\text{Yes}]{\text{Yes}}$ New, S:Old $\xleftrightarrow[\text{No}]{\text{No}}$ New, W:Add, Z:Discontinued, F:Interchangeable by set, K:Q'ty Change

Copyright (C) YANMAR CO., LTD. All RightsReserved.

Fig.27. PST CYLINDER

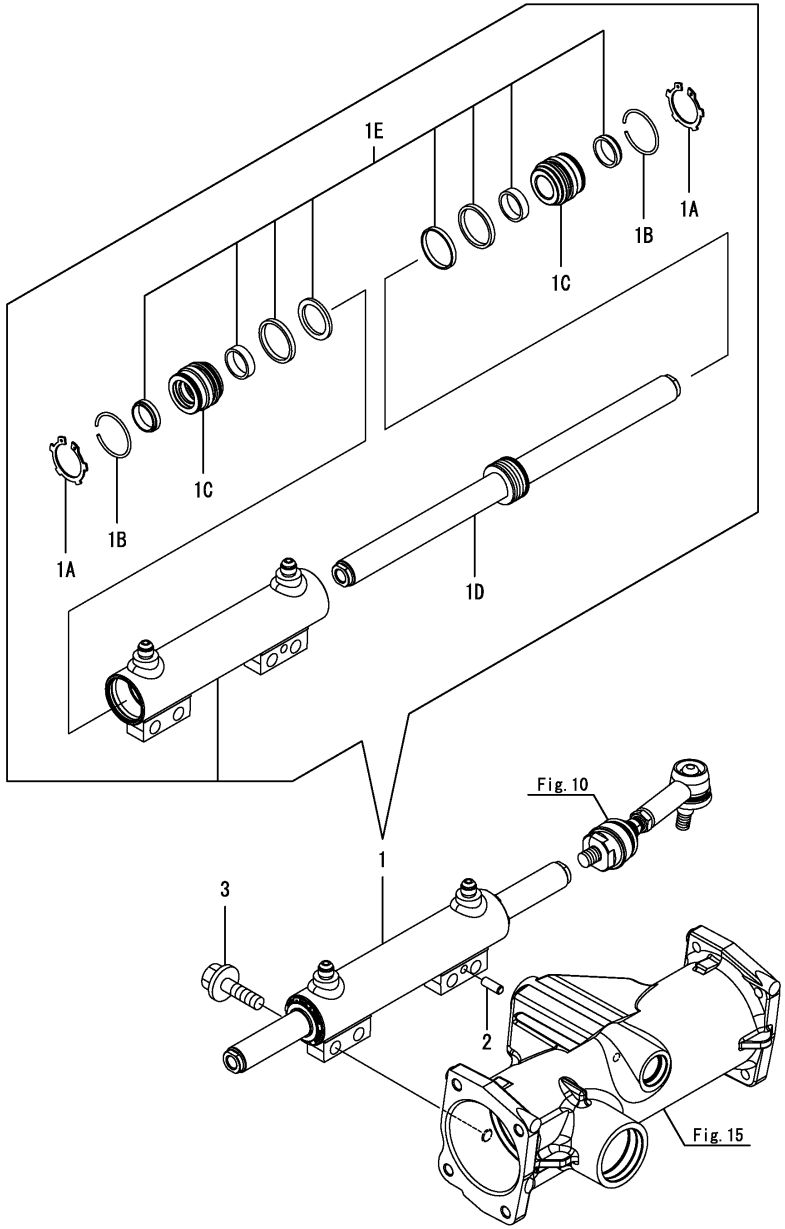

(A)=SC2400(CCY) (D)=
(B)= (E)=
(C)= (F)=

No.	Lev.	Parts No.	Description	Q'ty (A)	(B)	(C)	(D)	(E)	(F)	I	R
1	1	1A7880-17010	CYLINDER ASSY, PST	1							
1-1	1	1A7880-17011	CYLINDER ASSY	1						N	
	(A=F010101)										
1A	2	1A7880-17050	RING	2							
1B	2	1A7880-17060	RETAINING RING	2							
1B-1	2	1A7335-17520	CIRCLIP	2						R	
	(A=FXXXXX)										
1C	2	1A7880-17070	HEAD	2							
1D	2	1A7880-17080	ROD ASSY, PISTON	1							
1E	2	1A7880-17100	SEAL KIT	1							
1E-1	2	1A7880-17101	SEAL KIT	1						N	
	(A=F010101)										
2	1	22312-080200	PIN, PARALLEL M8X20	1							
3	1	26106-120452	BOLT, M12X 45 PLATED	4							

N:Old $\overset{\text{Yes}}{\underset{\text{No}}{\leftrightarrow}}$ New, Q:Old $\overset{\text{No}}{\underset{\text{Yes}}{\leftrightarrow}}$ New, R:Old $\overset{\text{Yes}}{\underset{\text{Yes}}{\leftrightarrow}}$ New, S:Old $\overset{\text{No}}{\underset{\text{No}}{\leftrightarrow}}$ New, W:Add, Z:Discontinued, F:Interchangeable by set, K:Q'ty Change

Copyright (C) YANMAR CO., LTD. All RightsReserved.

Fig.28. STEERING PIPE

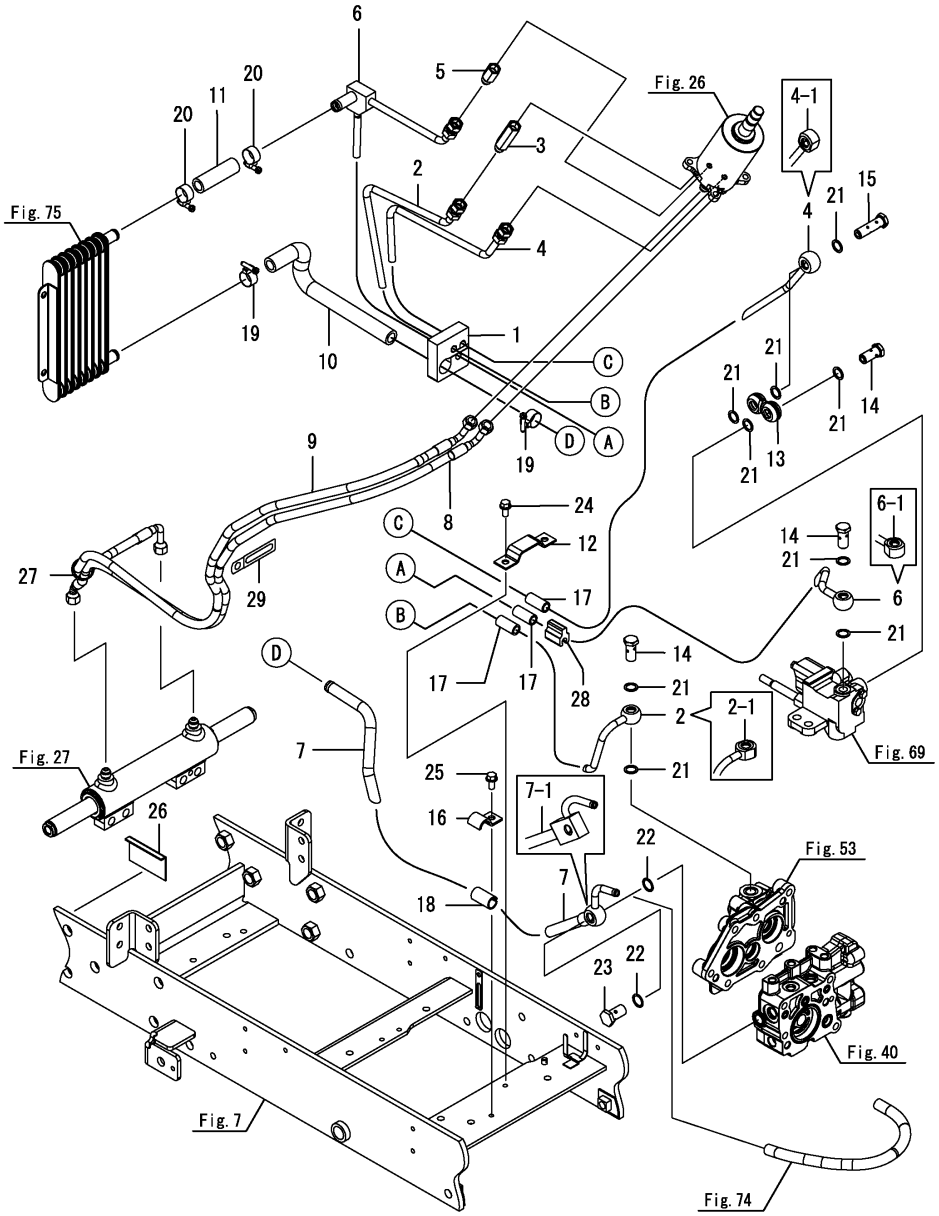

(A)=SC2400(CCY) (D)=
(B)= (E)=
(C)= (F)=

No.	Lev.	Parts No.	Description	Q'ty (A)	(B)	(C)	(D)	(E)	(F)	I	R
1	1	1A7880-15060	SEAL, PIPE	1							
2	1	1A7880-17600	PIPE ASSY, PRESSURE	1							
2-1	1	1A7880-17601	PIPE ASSY, PRESSURE	1						S	
	(A=F003133)										
3	1	1A7880-17630	JOINT, 9/16UNF-70	1							
4	1	1A7880-17650	PIPE ASSY, PRESSURE	1							
4-1	1	1A7880-17651	PIPE ASSY, PRESSURE	1						S	
	(A=F003133)										
5	1	1A7880-17680	JOINT, 9/16UNF-40	1							
6	1	1A7880-17700	PIPE ASSY, PRESSURE	1							
6-1	1	1A7880-17701	PIPE ASSY, PRESSURE	1						S	
	(A=F003133)										
7	1	1A7880-17750	PIPE ASSY, PRESSURE	1							
7-1	1	1A7880-17751	PIPE ASSY, PRESSURE	1						S	
	(A=F003133)										
8	1	1A7880-17810	HOSE, PRESSURE L	1							
9	1	1A7880-17830	HOSE, PRESSURE R	1							
10	1	1A7880-17930	HOSE, PRESSURE A	1							
11	1	1A7880-17940	HOSE, PRESSURE B	1							
12	1	1A7880-17980	CLAMP, PIPE	1							
13	1	1A7880-45150	CONNECTOR, 9/16UNF	1							
14	1	1A7880-47510	BOLT, JOINT 9/16UNF	3							
15	1	1A7880-47530	BOLT, JOINT 9/16UNF	1							
16	1	198240-48830	CLAMP	1							
17	1	194464-48850	RUBBER, ABSORBER	3							
18	1	198240-48850	CLAMP, ABSORBER	1							
19	1	23000-022000	CLAMP, 22	2							
20	1	23000-022000	CLAMP, 22	2							
21	1	23414-140000	GASKET, 14X1.0	9							
22	1	23414-160021	GASKET, 16X1.0	2							
23	1	23857-100000	BOLT, JOINT 10	1							
24	1	26106-080162	BOLT, M8X 16 PLATED	1							
25	1	26106-080162	BOLT, M8X 16 PLATED	1							
26	1	1A7500-51810	SEAL, HARNESS	1							
27	1	29622-140001	BAND, RF140	1							
27-1	1	1A8300-51210	BAND, REPEAT	1						R	
	(A=FXXXXX)										
28	1	1A7880-17970	CLAMP, PIPE	2							
29	1	194440-51630	CLAMP, HARNESS	1							

N:Old ←Yes/No→ New, Q:Old ←No/Yes→ New, R:Old ←Yes/Yes→ New, S:Old ←No/No→ New, W:Add, Z:Discontinued, F:Interchangeable by set, K:Q'ty Change

Copyright (C) YANMAR CO., LTD. All RightsReserved.

Fig.29. DRIVE SHAFT

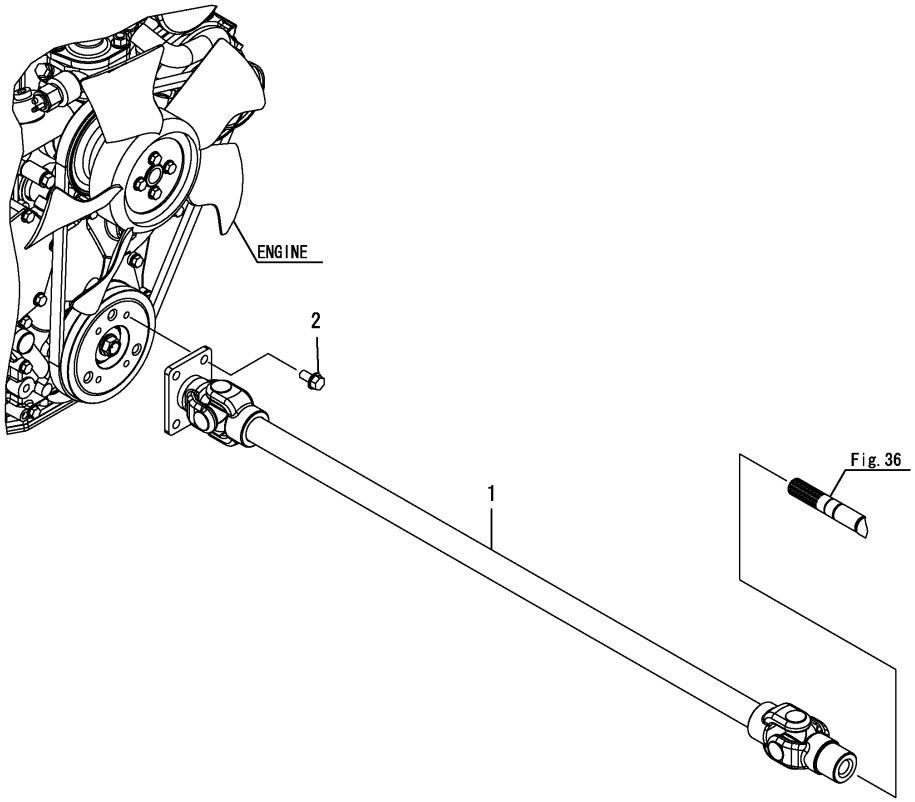

(A)=SC2400(CCY) (D)=
(B)= (E)=
(C)= (F)=

No.	Lev.	Parts No.	Description	Q'ty (A)	(B)	(C)	(D)	(E)	(F)	I	R
1	1	1A7880-21100	SHAFT ASSY, DRIVE	1							
2	1	26106-080162	BOLT, M8X 16 PLATED	4							

N:Old $\xleftarrow[\text{No}]{\text{Yes}}$ New, Q:Old $\xleftarrow[\text{Yes}]{\text{No}}$ New, R:Old $\xleftarrow[\text{Yes}]{\text{Yes}}$ New, S:Old $\xleftarrow[\text{No}]{\text{No}}$ New, W:Add, Z:Discontinued, F:Interchangeable by set, K:Q'ty Change

Copyright (C) YANMAR CO., LTD. All RightsReserved.

Fig.30. T/M ACCESSORIES

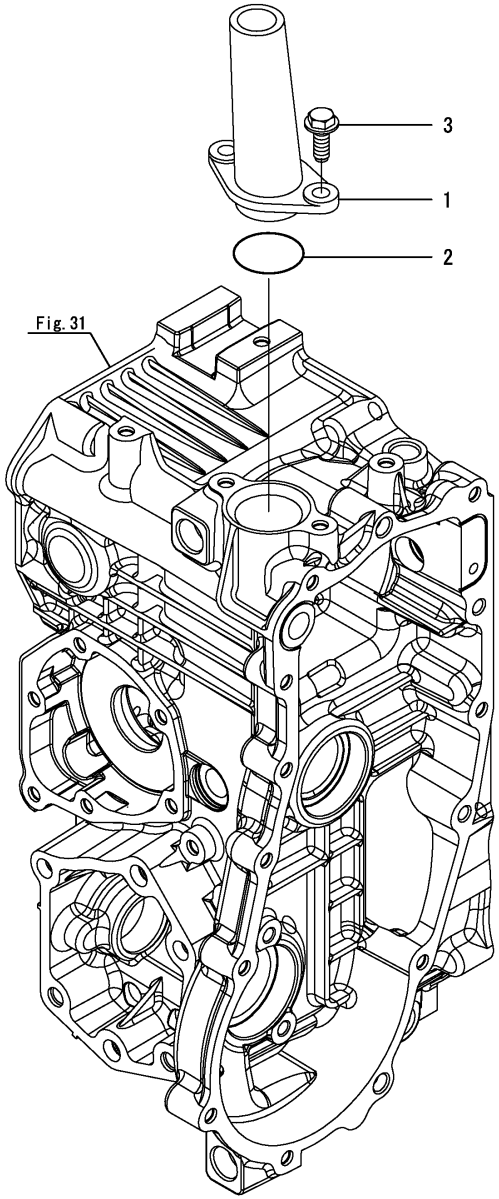

(A)=SC2400(CCY) (D)=
(B)= (E)=
(C)= (F)=

No.	Lev.	Parts No.	Description	Q'ty (A)	(B)	(C)	(D)	(E)	(F)	I	R
1	1	192157-24170	FILLER	1							
2	1	24311-000320	O-RING, 1AP32.0	1							
3	1	26476-080202	SCREW, TAPPING M8X20	2							

N:Old $\frac{\text{Yes}}{\text{No}}$ New, Q:Old $\frac{\text{No}}{\text{Yes}}$ New, R:Old $\frac{\text{Yes}}{\text{Yes}}$ New, S:Old $\frac{\text{No}}{\text{No}}$ New, W:Add, Z:Discontinued, F:Interchangeable by set, K:Q'ty Change

Copyright (C) YANMAR CO., LTD. All RightsReserved.

Fig.31. TRANSAXLE CASE

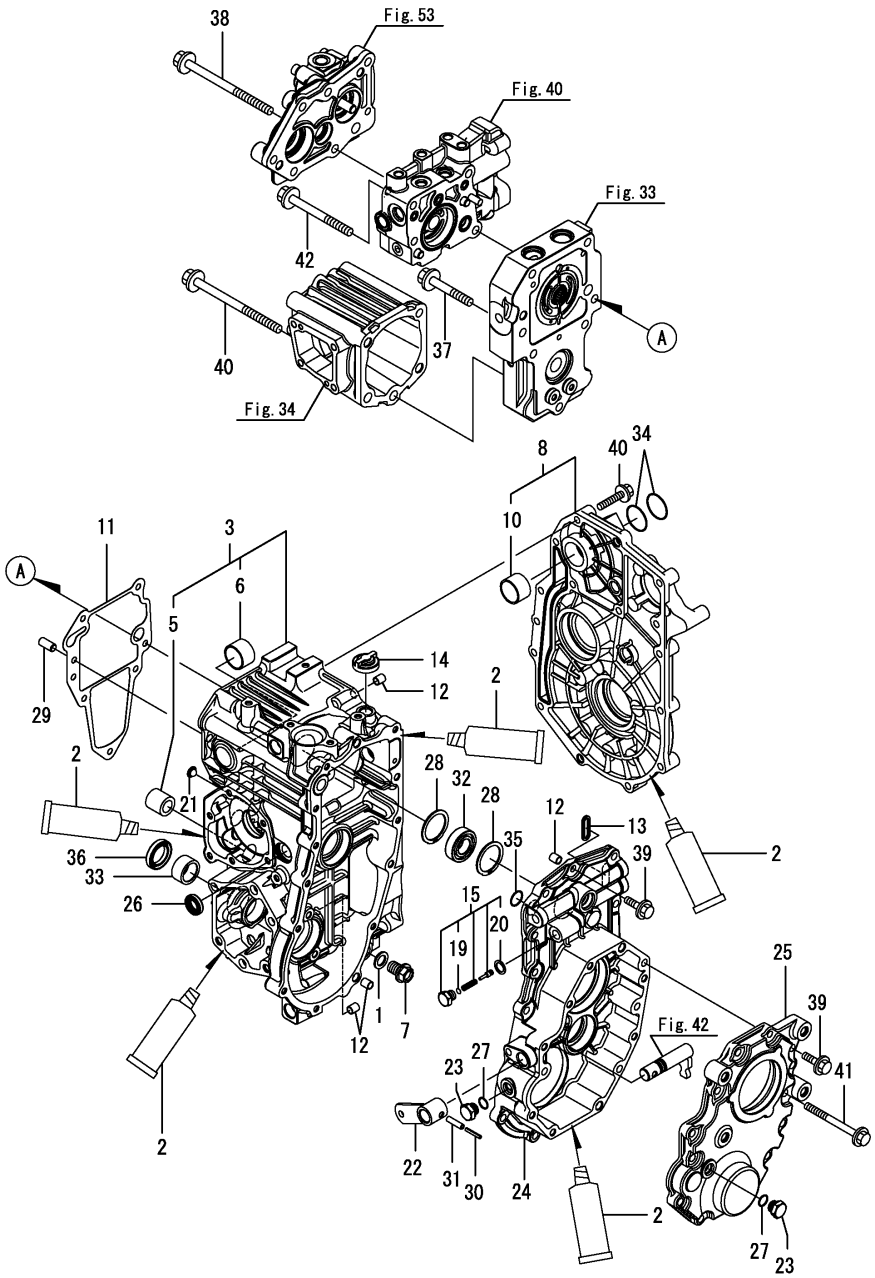

(A)=SC2400(CCY) (D)=
(B)= (E)=
(C)= (F)=

No.	Lev.	Parts No.	Description	Q'ty (A)	(B)	(C)	(D)	(E)	(F)	I	R
1	1	1C6900-23150	WASHER, PLUG	1							
2	1	194855-24020	SEALANT	1							
3	1	1A7050-24101	HOUSING KIT, MISSION	1							
5	2	198167-24950	JOINT, STRAINER	1							
6	2	24550-028200	BUSH, 28X20	1							
7	1	1A7050-24130	BOLT, DRAIN M14X20	1							
8	1	1A7050-24150	COVER KIT, CASE	1							
10	2	24550-028200	BUSH, 28X20	1							
11	1	192157-24192	PACKING, CASE	1							
12	1	192157-24200	COLLAR 8*10*11.5	4							
13	1	192157-24220	D-RING	1							
14	1	194859-24252	VALVE, VENT 15	1							
15	1	192157-24450	RELIEF KIT, PTO	1							
19	2	192157-27090	SHIM, 7X0.2	1							
20	2	23414-120000	GASKET, 12X1.0	1							
21	1	192157-24801	STRAINER	2							
22	1	187K06-26710	PTO ARM CMP	1							
23	1	187K06-26740	PLUG 9/16-18UNF	2							
24	1	192157-26810	CASE, REAR PTO	1							
25	1	192157-26821	COVER, REAR PTO CASE	1							
26	1	194065-27270	SEAL, OIL TC16266	1							
27	1	194850-49290	PACKING, 6-1	2							
28	1	22262-000420	RING, R-42	2							
29	1	22312-100200	PIN, PARALLEL M10X20	1							
30	1	22351-035025	PIN, SPRING 3.5X25	1							
31	1	22351-060025	PIN, SPRING 6.0X25	1							
32	1	24101-060044	BEARING, BALL 6004	1							
33	1	24162-253216	BEARING, 253216	1							
34	1	24311-000260	O-RING, 1AP26.0	2							
35	1	24351-190170	O-RING, 1A19017	1							
36	1	24421-253807	SEAL, OIL TC253807	1							
37	1	26016-100652	BOLT, M10X 65	1							
38	1	26016-101452	BOLT, M10X145	3							
39	1	26106-080302	BOLT, M8X 30 PLATED	19							
40	1	26106-080402	BOLT, M8X 40 PLATED	16							
41	1	26106-080902	BOLT, M8X 90 PLATED	4							
42	1	26016-101052	BOLT, M10X105	1							

N:Old $\overset{\text{Yes}}{\underset{\text{No}}{\leftrightarrows}}$ New, Q:Old $\overset{\text{No}}{\underset{\text{Yes}}{\leftrightarrows}}$ New, R:Old $\overset{\text{Yes}}{\underset{\text{Yes}}{\leftrightarrows}}$ New, S:Old $\overset{\text{No}}{\underset{\text{No}}{\leftrightarrows}}$ New, W:Add, Z:Discontinued, F:Interchangeable by set, K:Q'ty Change

Copyright (C) YANMAR CO., LTD. All RightsReserved.

Fig.32. OIL GAUGE

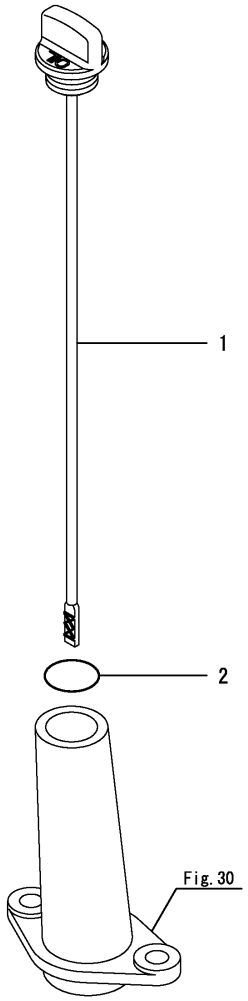

(A)=SC2400(CCY) (D)=
(B)= (E)=
(C)= (F)=

No.	Lev.	Parts No.	Description	Q'ty (A)	(B)	(C)	(D)	(E)	(F)	I	R
1	1	1A7880-21500	PLUG, 20X271	1							
2	1	24311-000180	O-RING, 1AP18.0	1							

N:Old $\xleftrightarrow[\text{No}]{\text{Yes}}$ New, Q:Old $\xleftrightarrow[\text{Yes}]{\text{No}}$ New, R:Old $\xleftrightarrow[\text{Yes}]{\text{Yes}}$ New, S:Old $\xleftrightarrow[\text{No}]{\text{No}}$ New, W:Add, Z:Discontinued, F:Interchangeable by set, K:Q'ty Change

Copyright (C) YANMAR CO., LTD. All RightsReserved.

Fig.33. CENTER CASE K93

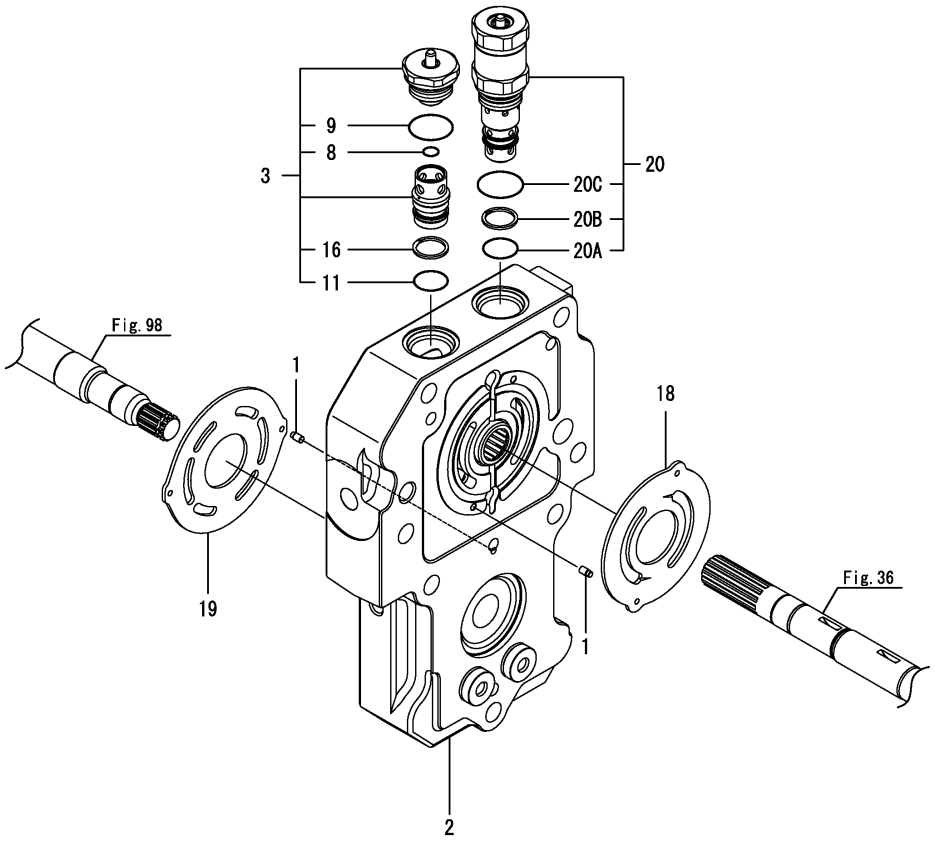

(A)=SC2400(CCY) (D)=
(B)= (E)=
(C)= (F)=

No.	Lev.	Parts No.	Description	Q'ty (A)	(B)	(C)	(D)	(E)	(F)	I	R
1	1	192163-24420	PIN, KNOCK 3.5	4							
2	1	187K06-24500	CENTER CASE K93 CMP	1							
3	1	1A7050-24990	VALVE ASSY, CHECK R	1							
8	3	24311-000050	O-RING, 1AP5.0	1							
9	3	24311-000200	O-RING, 1AP20.0	1							
11	3	192154-24670	PACKING 1015	1							
16	3	192157-40180	RING, BACK UP 18	1							
18	1	168H61-29260	VALVE PLATE(P	1							
19	1	168HK0-29351	VALVE PLATE(M	1							
20	1	187K06-40010	RELEAF ASSY,TOW 25	1							
20A	2	192154-24670	PACKING 1015	1							
20B	2	192157-40180	RING, BACK UP 18	1							
20C	2	24311-000200	O-RING, 1AP20.0	1							

N:Old $\xleftrightarrow[\text{No}]{\text{Yes}}$ New, Q:Old $\xleftrightarrow[\text{Yes}]{\text{No}}$ New, R:Old $\xleftrightarrow[\text{Yes}]{\text{Yes}}$ New, S:Old $\xleftrightarrow[\text{No}]{\text{No}}$ New, W:Add, Z:Discontinued, F:Interchangeable by set, K:Q'ty Change

Copyright (C) YANMAR CO., LTD. All RightsReserved.

Fig.34. MOTOR CASE

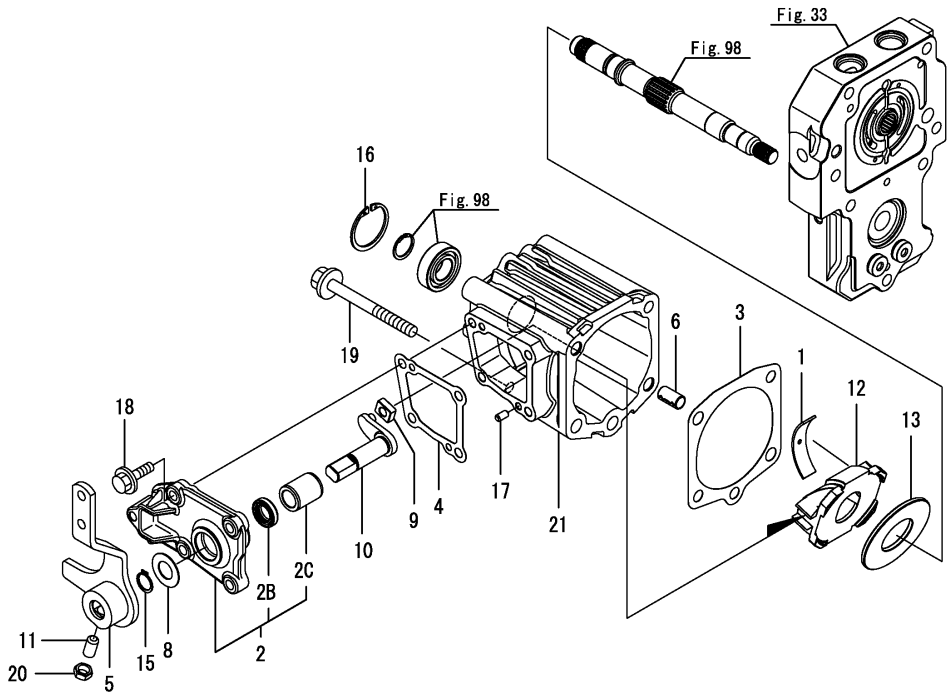

(A)=SC2400(CCY) (D)=
(B)= (E)=
(C)= (F)=

No.	Lev.	Parts No.	Description	Q'ty (A)	(B)	(C)	(D)	(E)	(F)	I	R
1	1	178080-06200	THRUST METAL(DDR16	2							
2	1	187K06-24540	SIDE COVER CMP	1							
2B	2	194065-27270	SEAL, OIL TC16266	1							
2C	2	168H60-29840	BUSH 16X24X30	1							
3	1	192157-24560	PACKING, MOTOR CASE	1							
4	1	187K06-24570	PAKING (SIDE COVER	1							
5	1	187K06-24600	SECOND LEVER CMP	1							
6	1	192157-24850	PIN 12X22,KNOCK	2							
8	1	168H60-29390	WASHER 17X32X1	1							
9	1	168H60-29400	SHIFT BLOCK	1							
10	1	168H60-29411	CONTROL ARM	1							
11	1	1A7130-29420	SCREW, M10X20	1							
12	1	187K06-29460	SWASH PLATE	1							
13	1	168HK0-29620	PLATE, THRUST	1							
15	1	22242-000160	RING, 16	1							
16	1	22252-000420	RING, 42	1							
17	1	22312-060100	PIN, PARALLEL M6X10	2							
18	1	26106-080302	BOLT, M8X 30 PLATED	4							
19	1	26106-101052	BOLT, M10X105 PLATED	1							
20	1	26776-100002	NUT, LOCK M10	1							
21	1	187K06-24550	MOTOR CASE K93	1							

N:Old $\xleftarrow[\text{No}]{\text{Yes}}$ New, Q:Old $\xleftarrow[\text{Yes}]{\text{No}}$ New, R:Old $\xleftarrow[\text{Yes}]{\text{Yes}}$ New, S:Old $\xleftarrow[\text{No}]{\text{No}}$ New, W:Add, Z:Discontinued, F:Interchangeable by set, K:Q'ty Change

Copyright (C) YANMAR CO., LTD. All RightsReserved.

Fig.35. FILTER

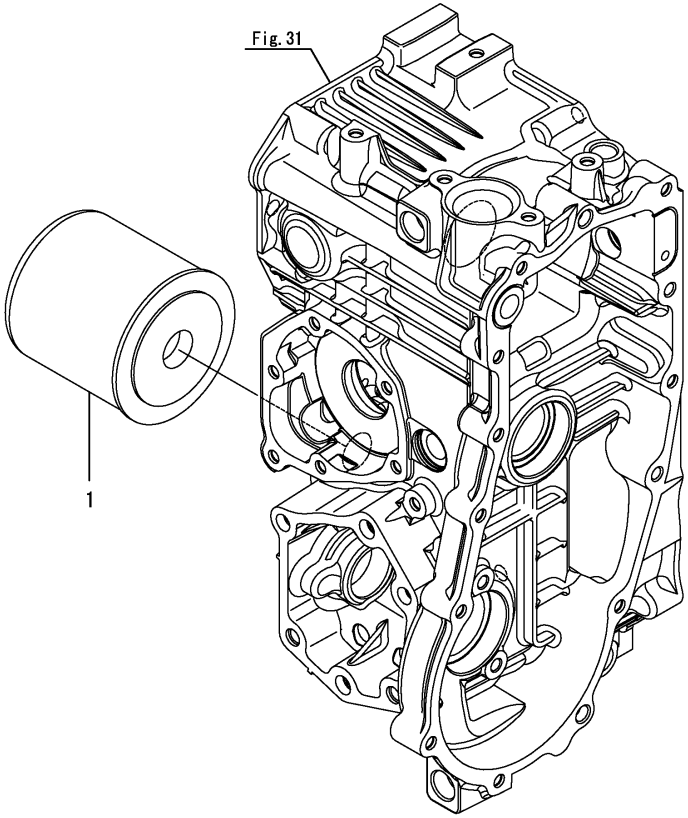

(A)=SC2400(CCY) (D)=
(B)= (E)=
(C)= (F)=

No.	Lev.	Parts No.	Description	Q'ty (A)	(B)	(C)	(D)	(E)	(F)	I	R
1	1	1A7050-24950	FILTER, OIL	1							

N:Old ◄Yes/No► New, Q:Old ◄No/Yes► New, R:Old ◄Yes/Yes► New, S:Old ◄No/No► New, W:Add, Z:Discontinued, F:Interchangeable by set, K:Q'ty Change

Copyright (C) YANMAR CO., LTD. All RightsReserved.

Fig.36. PUMP

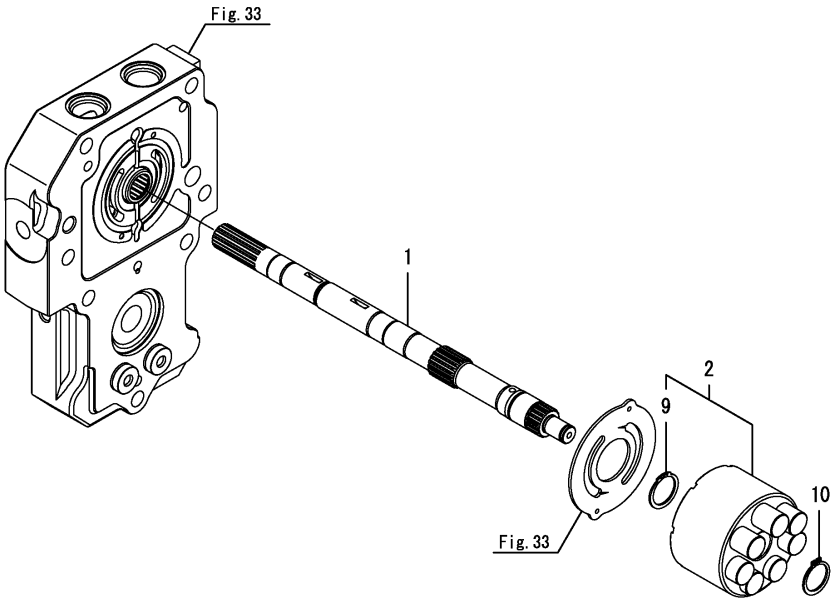

(A)=SC2400(CCY) (D)=
(B)= (E)=
(C)= (F)=

No.	Lev.	Parts No.	Description	Q'ty (A)	(B)	(C)	(D)	(E)	(F)	I	R
1	1	187K06-25170	PUMP SHAFT K93	1							
2	1	1A7050-25181	BLOCK ASSY, CYLINDER	1							
9	2	22262-000240	RING, R-24	1							
10	1	22242-000200	RING, 20	1							

N:Old $\xleftrightarrow[\text{No}]{\text{Yes}}$ New, Q:Old $\xleftrightarrow[\text{Yes}]{\text{No}}$ New, R:Old $\xleftrightarrow[\text{Yes}]{\text{Yes}}$ New, S:Old $\xleftrightarrow[\text{No}]{\text{No}}$ New, W:Add, Z:Discontinued, F:Interchangeable by set, K:Q'ty Change

Copyright (C) YANMAR CO., LTD. All RightsReserved.

Fig.37. CLUTCH SHAFT

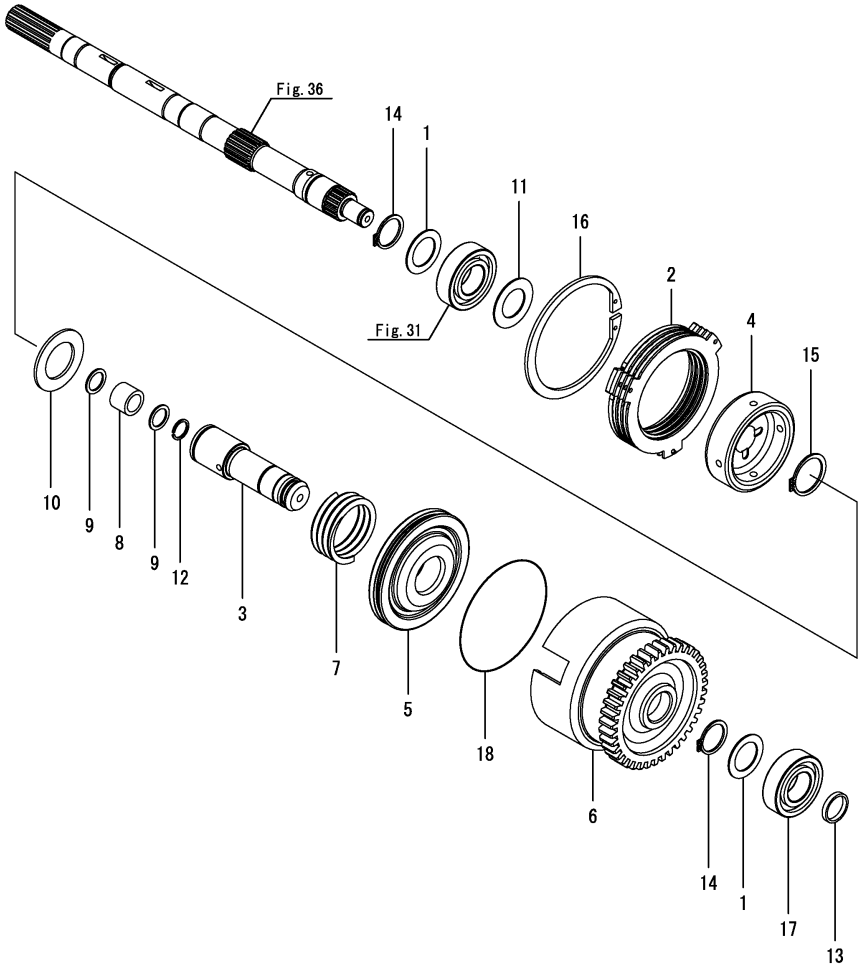

(A)=SC2400(CCY) (D)=
(B)= (E)=
(C)= (F)=

No.	Lev.	Parts No.	Description	Q'ty (A)	(B)	(C)	(D)	(E)	(F)	I	R
1	1	194200-25270	SPACER, SHAFT	2							
2	1	192157-26100	DISC KIT, FRICTION	1							
3	1	192157-26111	SHAFT, CLUTCH	1							
4	1	192157-26120	COLLAR, SPLINE	1							
5	1	192157-26130	PISTON	1							
6	1	192157-26140	GEAR, CLUTCH Z=39	1							1
7	1	192157-26150	SPRING, PTO RETURN	1							
8	1	192157-26160	NEEDLE, 121718	1							
9	1	192157-26170	WASHER, 13X17X1	2							
10	1	192157-26270	WASHER 25X42X2	1							
11	1	192157-26300	WASHER, 20X34X1	1							
12	1	192157-26330	RING 12	1							
13	1	192157-26350	RING, SEAL	1							
14	1	22242-000200	RING, 20	2							
15	1	22242-000250	RING, 25	1							
16	1	22252-000800	RING, 80	1							
17	1	24101-060044	BEARING, BALL 6004	1							
18	1	24321-000750	O-RING, 1AG75.0	1							

Remarks
(1) Refer to Fig.117 for the service part.

N:Old $\xleftrightarrow[\text{No}]{\text{Yes}}$ New, Q:Old $\xleftrightarrow[\text{Yes}]{\text{No}}$ New, R:Old $\xleftrightarrow[\text{Yes}]{\text{Yes}}$ New, S:Old $\xleftrightarrow[\text{No}]{\text{No}}$ New, W:Add, Z:Discontinued, F:Interchangeable by set, K:Q'ty Change

Copyright (C) YANMAR CO., LTD. All RightsReserved.

Fig.38. PTO BRAKE

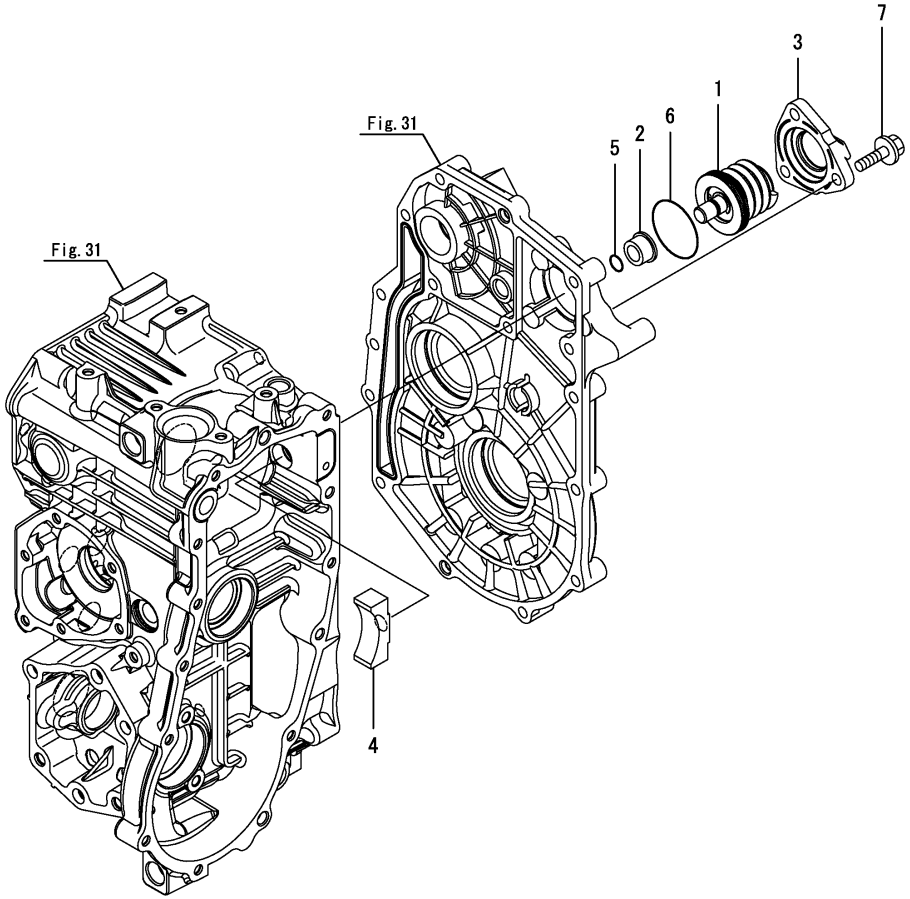

(A)=SC2400(CCY) (D)=
(B)= (E)=
(C)= (F)=

No.	Lev.	Parts No.	Description	Q'ty (A)	(B)	(C)	(D)	(E)	(F)	I	R
1	1	1A7050-26080	BRAKE KIT, PTO	1							
2	1	192157-26180	COLLAR, BRAKE PIN	1							
3	1	1A7050-26210	COVER, PTO BRAKE	1							
4	1	192157-26220	SHOE, BRAKE	1							
5	1	24311-000100	O-RING, 1AP10.0	1							
6	1	24351-240450	O-RING, 1A24045	1							
7	1	26106-080252	BOLT, M8X 25 PLATED	3							

N:Old $\overset{\text{Yes}}{\underset{\text{No}}{\leftrightarrows}}$ New, Q:Old $\overset{\text{No}}{\underset{\text{Yes}}{\leftrightarrows}}$ New, R:Old $\overset{\text{Yes}}{\underset{\text{Yes}}{\leftrightarrows}}$ New, S:Old $\overset{\text{No}}{\underset{\text{No}}{\leftrightarrows}}$ New, W:Add, Z:Discontinued, F:Interchangeable by set, K:Q'ty Change

Copyright (C) YANMAR CO., LTD. All RightsReserved.

Fig.39. PTO SHAFT

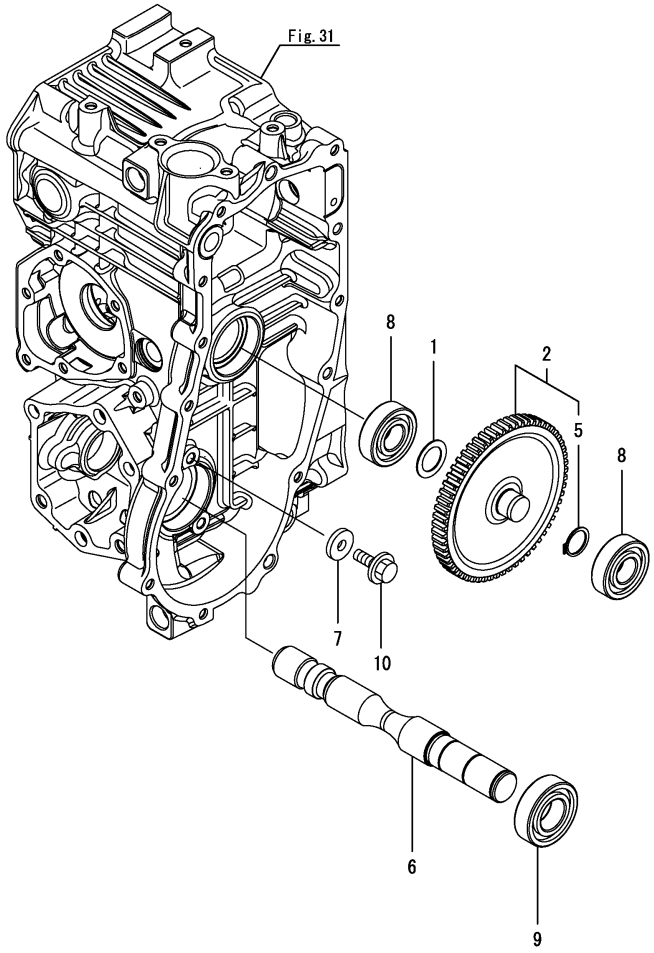

(A)=SC2400(CCY) (D)=
(B)= (E)=
(C)= (F)=

No.	Lev.	Parts No.	Description	Q'ty (A)	(B)	(C)	(D)	(E)	(F)	I	R
1	1	194200-25270	SPACER, SHAFT	1							
2	1	192157-26340	IDLE ASSY, PTO	1							1
5	2	22242-000200	RING, 20	1							1
6	1	1A7050-26360	SHAFT, MID PTO	1							
7	1	192157-26380	WASHER, 8.5X24X4	2							
8	1	24101-062044	BEARING, BALL 6204	2							
9	1	24101-062054	BEARING, BALL 6205	1							
10	1	26016-080202	BOLT, M8X 20	2							

Remarks
(1) Refer to Fig.117 for the service part.

N:Old $\xleftrightarrow[\text{No}]{\text{Yes}}$ New, Q:Old $\xleftrightarrow[\text{Yes}]{\text{No}}$ New, R:Old $\xleftrightarrow[\text{Yes}]{\text{Yes}}$ New, S:Old $\xleftrightarrow[\text{No}]{\text{No}}$ New, W:Add, Z:Discontinued, F:Interchangeable by set, K:Q'ty Change

Copyright (C) YANMAR CO., LTD. All RightsReserved.

Fig.40. POWER PUMP K93

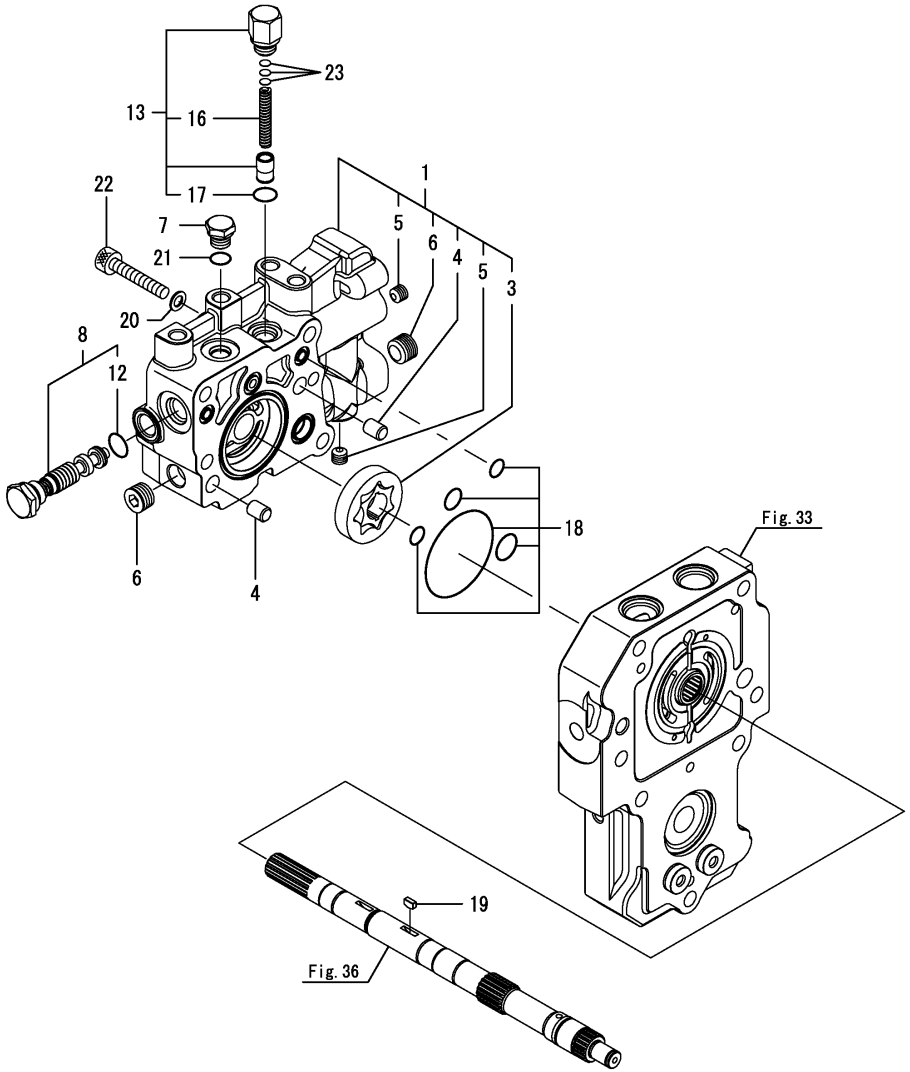

(A)=SC2400(CCY) (D)=
(B)= (E)=
(C)= (F)=

No.	Lev.	Parts No.	Description	Q'ty (A)	(B)	(C)	(D)	(E)	(F)	I	R
1	1	187K06-26400	PUMP BODY K93 CMP	1							
3	2	1A6370-31000	ROTOR SET	1							
4	2	22312-100120	PIN, PARALLEL M10X12	2							
5	2	23871-010000	PLUG, R01	2							
6	2	23871-030000	PLUG, R03	2							
7	1	192157-26460	PLUG 1/2-20 UNF	1							
8	1	192157-26470	REDUCING VALVE COMP.	1							
12	2	24311-000140	O-RING, 1AP14.0	1							
13	1	192157-26520	PRESSURE VALVE COMP.	1							
16	2	192157-26740	SPRING	1							
17	2	24311-000120	O-RING, 1AP12.0	1							
18	1	187K06-29390	GASKET SET	1							
19	1	187K06-29890	KEY, 8X3.2	1							
20	1	22190-080002	WASHER, SEAL 6	1							
21	1	24361-090500	O-RING, 1AAS905	1							
22	1	26450-080502	BOLT, M8X 50	1							
23	1	1684Q3-01430	SHIM 7X0.5	3							

N:Old $\xleftrightarrow[\text{No}]{\text{Yes}}$ New, Q:Old $\xleftrightarrow[\text{Yes}]{\text{No}}$ New, R:Old $\xleftrightarrow[\text{Yes}]{\text{Yes}}$ New, S:Old $\xleftrightarrow[\text{No}]{\text{No}}$ New, W:Add, Z:Discontinued, F:Interchangeable by set, K:Q'ty Change

Copyright (C) YANMAR CO., LTD. All RightsReserved.

Fig.41. SOLENOID VALVE

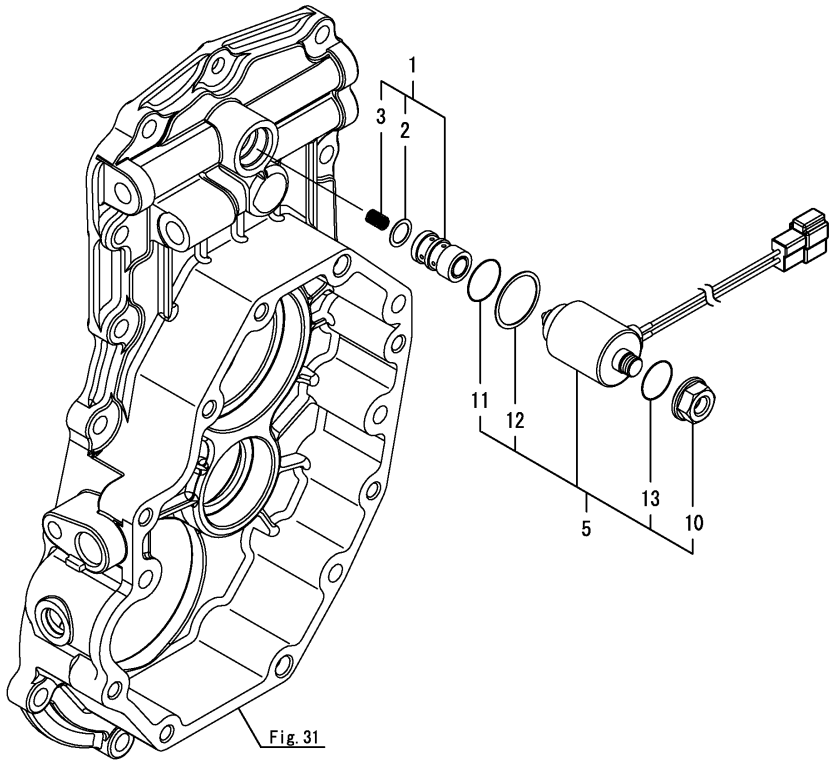

(A)=SC2400(CCY) (D)=
(B)= (E)=
(C)= (F)=

No.	Lev.	Parts No.	Description	Q'ty (A)	(B)	(C)	(D)	(E)	(F)	I	R
1	1	192157-26611	VALVE SOLENOID CMP	1							
2	2	192157-26600	SHIM WASHER	1							
3	2	192157-26641	SPRING, SOLENOID	1							
5	1	192159-27700	SOLENOID ASSY	1							
10	3	192159-27790	PLASTIC NUT	1							
11	3	24311-000180	O-RING, 1AP18.0	1							
12	2	192159-27780	GASKET, SOLENOID	1							
13	2	24341-000112	O-RING, 1AS11.2	1							

N:Old $\overset{\text{Yes}}{\underset{\text{No}}{\leftrightarrows}}$ New, Q:Old $\overset{\text{No}}{\underset{\text{Yes}}{\leftrightarrows}}$ New, R:Old $\overset{\text{Yes}}{\underset{\text{Yes}}{\leftrightarrows}}$ New, S:Old $\overset{\text{No}}{\underset{\text{No}}{\leftrightarrows}}$ New, W:Add, Z:Discontinued, F:Interchangeable by set, K:Q'ty Change

Copyright (C) YANMAR CO., LTD. All RightsReserved.

Fig.42. R-PTO SHAFT

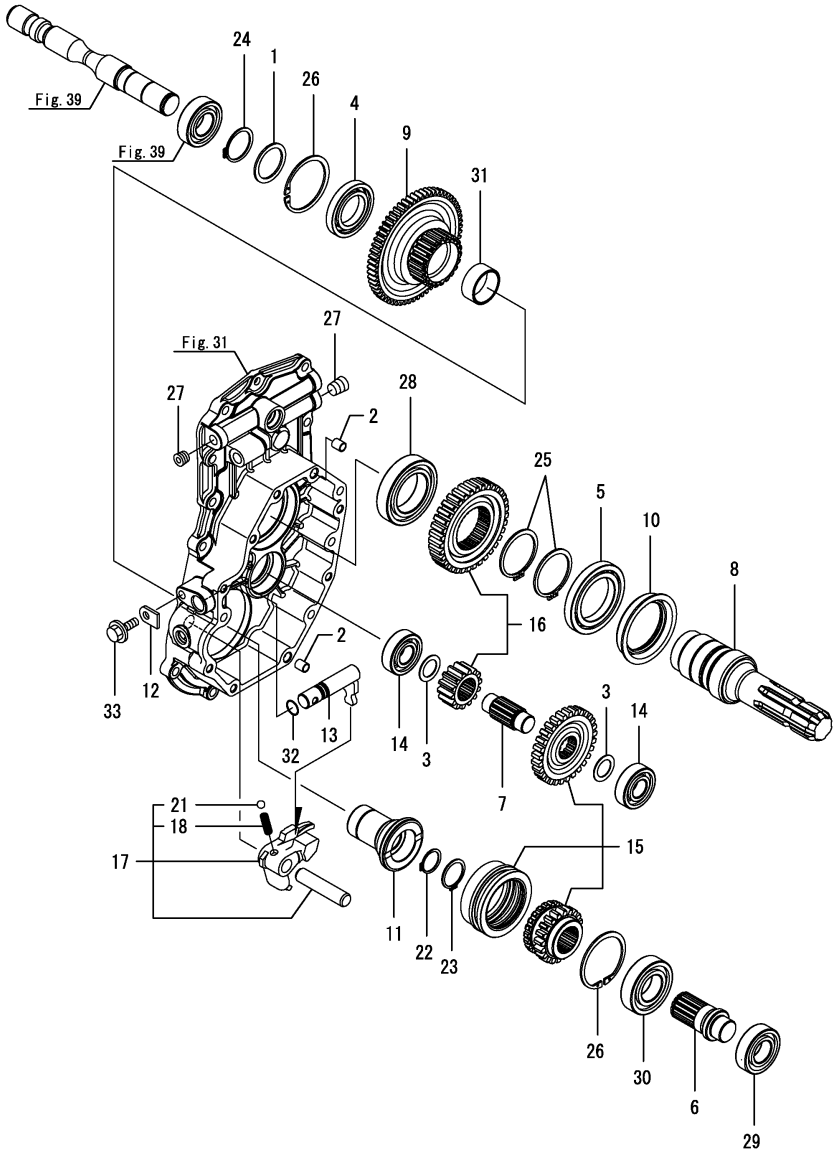

(A)=SC2400(CCY) (D)=
(B)= (E)=
(C)= (F)=

No.	Lev.	Parts No.	Description	Q'ty (A)	(B)	(C)	(D)	(E)	(F)	I	R
1	1	194464-22160	SPACER, 35.5X45X2	1							
2	1	192157-24200	COLLAR 8*10*11.5	2							
3	1	194200-25270	SPACER, SHAFT	2							
4	1	194454-25770	BEARING, BALL 16007	1							
5	1	194454-25870	BEARING, BALL 16010	1							
6	1	192157-26840	SHAFT, REAR PTO	1							
7	1	192157-26860	SHAFT, REAR PTO IDLE	1							
8	1	1A7052-26890	SHAFT, REAR PTO	1							
9	1	192157-26960	GEAR, PTO Z=62 B	1							1
10	1	192157-26980	SEAL, TCFY557214	1							
11	1	192157-26991	COLLAR, SPLINE	1							
12	1	194197-27681	PLATE, KEEP	1							
13	1	192157-27740	SHAFT, MBR CHANGE	1							
14	1	192159-31410	BEARING,6204R SH2	2							
15	1	192157-99010	GEAR KIT, 20-29	1							
16	1	192157-99020	GEAR KIT, 14-35	1							
17	1	192157-99040	HORK KIT, MBR	1							
18	2	194145-27450	SPRING	1							
21	2	24190-100001	BALL, STEEL 5/16	1							
22	1	22242-000240	RING, 24	1							
23	1	22242-000290	RING, 29	1							
24	1	22242-000350	RING, 35	1							
25	1	22242-000500	RING, 50	2							
26	1	22252-000620	RING, 62	2							
27	1	23871-020000	PLUG, R02	3							
28	1	24101-060094	BEARING, BALL 6009	1							
29	1	24101-062054	BEARING, BALL 6205	1							
30	1	24101-062064	BEARING, BALL 6206	1							
31	1	24161-354017	BEARING, 354017	1							
32	1	24311-000125	O-RING, 1AP12.5	1							
33	1	26016-080202	BOLT, M8X 20	1							

Remarks
(1) Refer to Fig.117 for the service part.

N:Old $\xleftarrow[\text{No}]{\text{Yes}}$ New, Q:Old $\xleftarrow[\text{Yes}]{\text{No}}$ New, R:Old $\xleftarrow[\text{Yes}]{\text{Yes}}$ New, S:Old $\xleftarrow[\text{No}]{\text{No}}$ New, W:Add, Z:Discontinued, F:Interchangeable by set, K:Q'ty Change

Copyright (C) YANMAR CO., LTD. All RightsReserved.

Fig.43. SHIFT

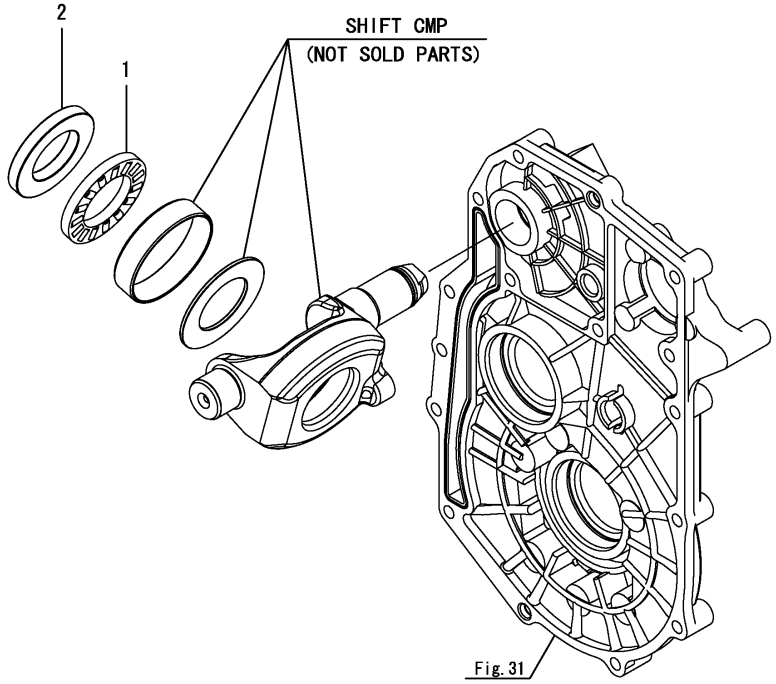

(A)=SC2400(CCY) (D)=
(B)= (E)=
(C)= (F)=

No.	Lev.	Parts No.	Description	Q'ty (A)	(B)	(C)	(D)	(E)	(F)	I	R
1	1	1A7050-24610	BEARING, THRUST	1							
2	1	192157-24620	PLATE, THRUST A	1							

N:Old $\xleftrightarrow[\text{No}]{\text{Yes}}$ New, Q:Old $\xleftrightarrow[\text{Yes}]{\text{No}}$ New, R:Old $\xleftrightarrow[\text{Yes}]{\text{Yes}}$ New, S:Old $\xleftrightarrow[\text{No}]{\text{No}}$ New, W:Add, Z:Discontinued, F:Interchangeable by set, K:Q'ty Change

Copyright (C) YANMAR CO., LTD. All RightsReserved.

Fig.44. RANGE LEVER

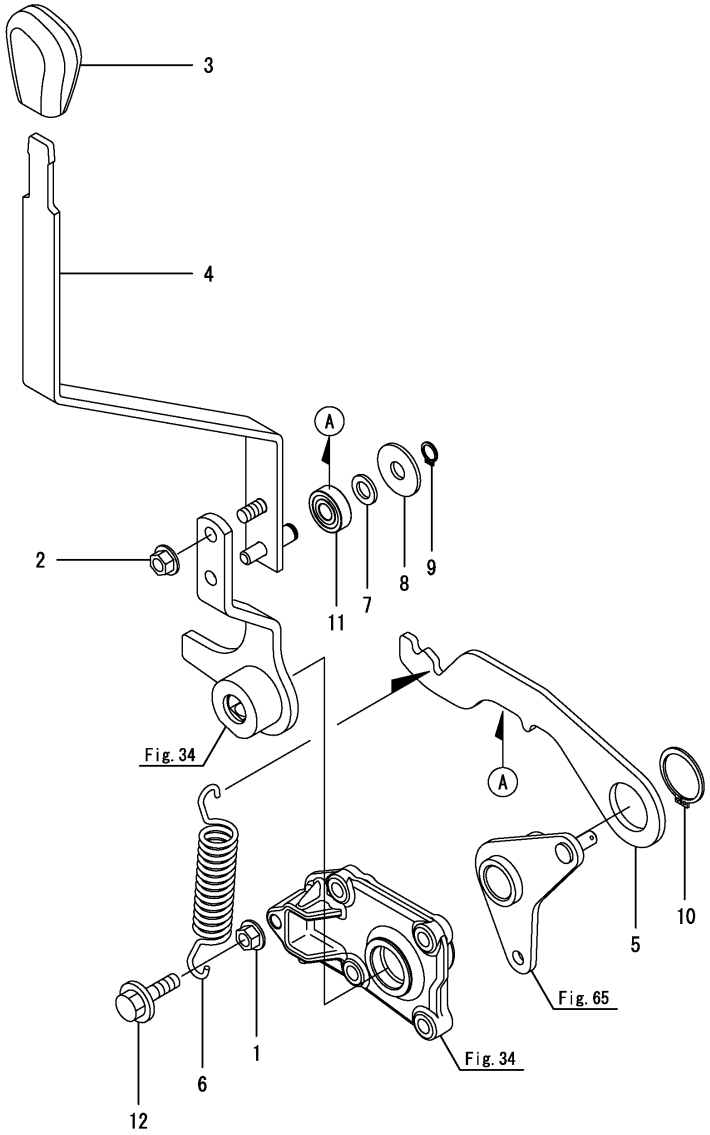

(A)=SC2400(CCY) (D)=
(B)= (E)=
(C)= (F)=

No.	Lev.	Parts No.	Description	Q'ty (A)	(B)	(C)	(D)	(E)	(F)	I	R
1	1	26716-080002	NUT, M8	1							
2	1	194990-22140	NUT, M8	2							
3	1	198200-27810	KNOB, ORANGE	1							
3-1	1	198200-27811	KNOB, ORANGE	1						N	
	(A=F003458)										
4	1	1A7880-27500	LEVER ASSY, RANGE	1							
5	1	1A7880-27560	ARM, RANGE	1							
5-1	1	1A7880-27561	ARM, RANGE	1						R	
	(A=FXXXXX)										
6	1	1A7880-27580	SPRING	1							
7	1	22117-100000	WASHER, 10	1							
8	1	22157-100000	WASHER, 10	1							
9	1	22242-000100	RING, 10	1							
10	1	22242-000300	RING, 30	1							
11	1	24104-060004	BEARING, BALL 6000UU	1							
12	1	26106-080252	BOLT, M8X 25 PLATED	1							

N:Old $\xleftrightarrow[\text{No}]{\text{Yes}}$ New, Q:Old $\xleftrightarrow[\text{Yes}]{\text{No}}$ New, R:Old $\xleftrightarrow[\text{Yes}]{\text{Yes}}$ New, S:Old $\xleftrightarrow[\text{No}]{\text{No}}$ New, W:Add, Z:Discontinued, F:Interchangeable by set, K:Q'ty Change

Copyright (C) YANMAR CO., LTD. All RightsReserved.

Fig.45. CONTROL

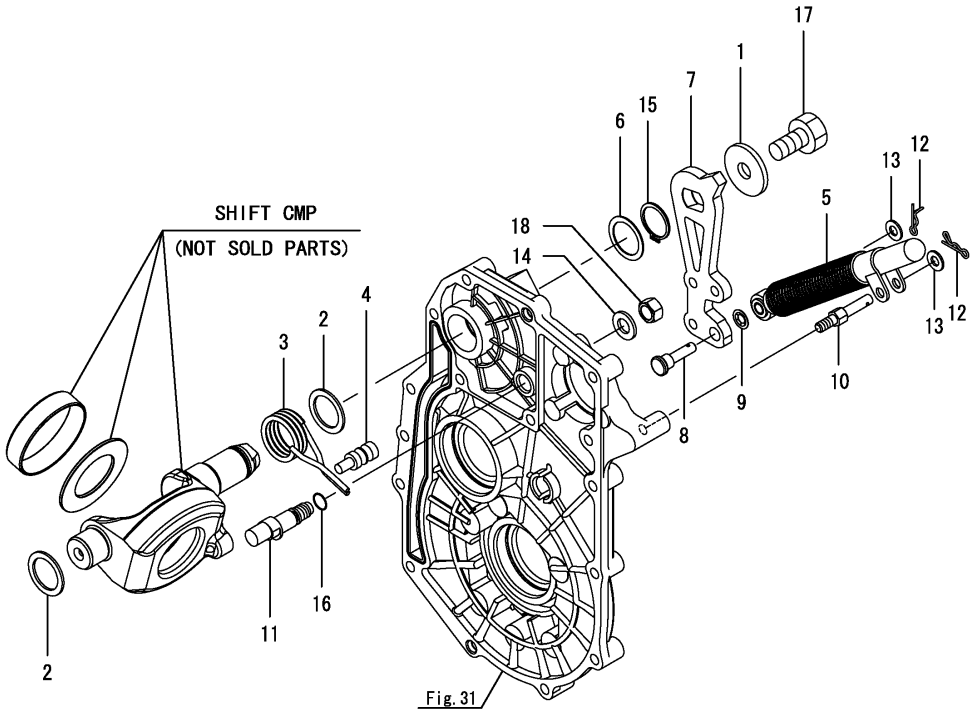

(A)=SC2400(CCY) (D)=
(B)= (E)=
(C)= (F)=

No.	Lev.	Parts No.	Description	Q'ty (A)	(B)	(C)	(D)	(E)	(F)	I	R
1	1	172524-06850	WASHER 44X14X4.5	1							
2	1	198167-24530	WASHER, 28X38X2	2							
3	1	192157-27510	SPRING,N/C	1							
4	1	192157-27520	PIN, N/C	1							
5	1	1A7050-27530	ABSORBER, SHOCK	1							
6	1	192157-27550	WASHER 29*35*1	1							
7	1	1A7050-27600	ARM, CONTROL	1							
8	1	1A7050-27610	PIN, ARM	1							
9	1	1A7050-27620	NUT, PUSH 7.8	1							
10	1	192154-29640	STUD	1							
11	1	192154-29700	FULCRUM	1							
12	1	1C6281-52320	PIN, SNAP 8	2							
13	1	22137-080000	WASHER, 8	2							
14	1	22137-120000	WASHER, 12	1							
15	1	22242-000280	RING, 28	1							
16	1	24311-240100	O-RING, 1AP10A	1							
17	1	26116-140302	BOLT, M14X 30 PLATED	1							
18	1	26776-120002	NUT, LOCK M12	1							

N:Old $\overset{\text{Yes}}{\underset{\text{No}}{\leftrightarrows}}$ New, Q:Old $\overset{\text{No}}{\underset{\text{Yes}}{\leftrightarrows}}$ New, R:Old $\overset{\text{Yes}}{\underset{\text{Yes}}{\leftrightarrows}}$ New, S:Old $\overset{\text{No}}{\underset{\text{No}}{\leftrightarrows}}$ New, W:Add, Z:Discontinued, F:Interchangeable by set, K:Q'ty Change

Copyright (C) YANMAR CO., LTD. All RightsReserved.

Fig.46. PTO LEVER

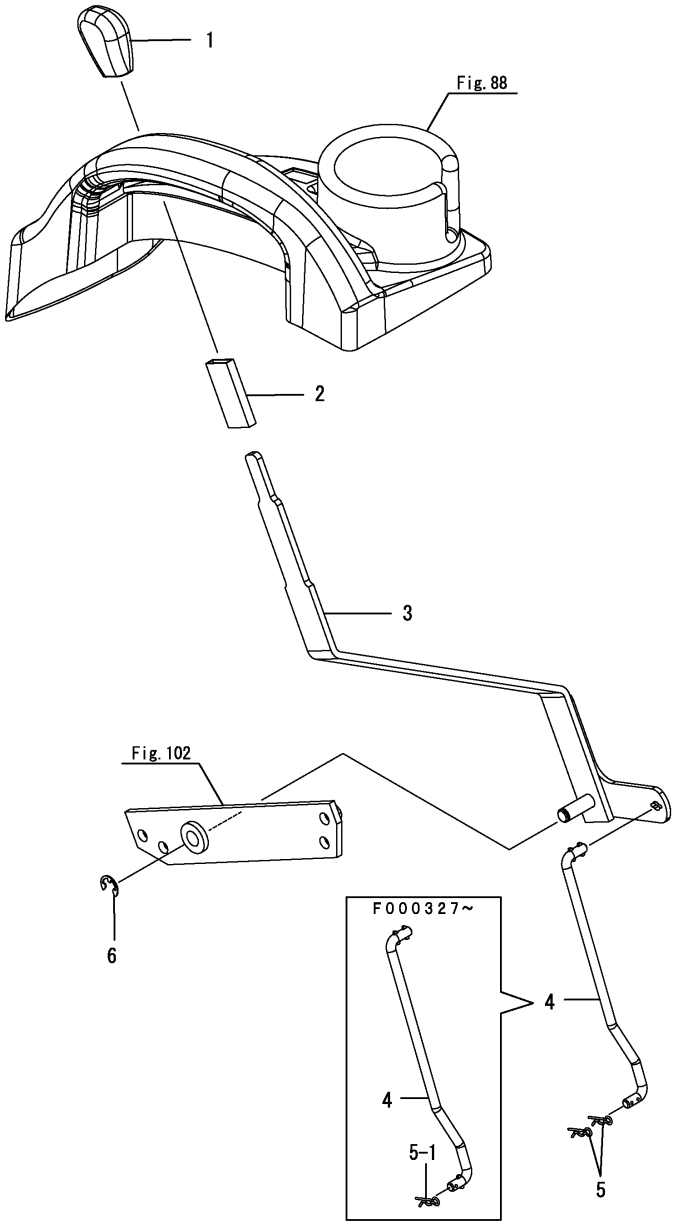

(A)=SC2400(CCY) (D)=
(B)= (E)=
(C)= (F)=

No.	Lev.	Parts No.	Description	Q'ty (A)	(B)	(C)	(D)	(E)	(F)	I	R
1	1	198200-27910	KNOB, YELLOW	1							
1-1	1	198200-27911	KNOB, YELLOW	1						N	
	(A=F003458)										
2	1	198162-47630	TUBE, PROTECT 60	1							
3	1	1A7880-27800	LEVER ASSY, PTO	1							
4	1	1A7880-27850	ROD, PTO	1							
5	1	22372-080000	PIN, SNAP 8	2							
5-1	1	22372-080000	PIN, SNAP 8	1						K	
	(A=F000327)										
6	1	22272-000100	RING, E-10	1							

N:Old $\xleftrightarrow[\text{No}]{\text{Yes}}$ New, Q:Old $\xleftrightarrow[\text{Yes}]{\text{No}}$ New, R:Old $\xleftrightarrow[\text{Yes}]{\text{Yes}}$ New, S:Old $\xleftrightarrow[\text{No}]{\text{No}}$ New, W:Add, Z:Discontinued, F:Interchangeable by set, K:Q'ty Change

Copyright (C) YANMAR CO., LTD. All RightsReserved.

Fig.47. DRIVE SHAFT

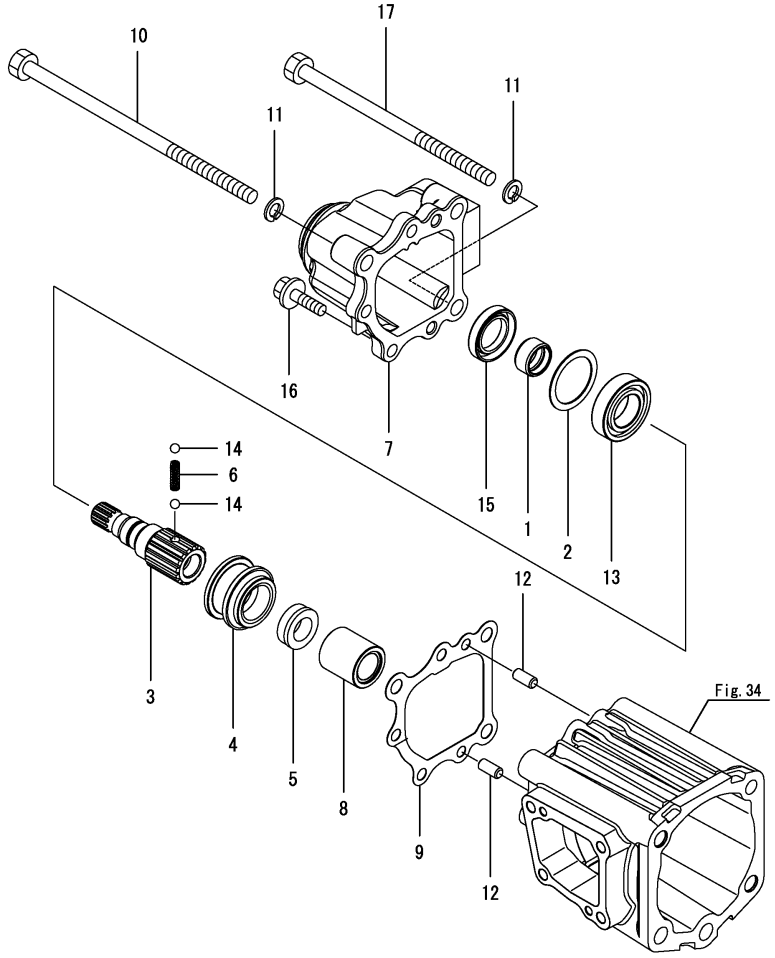

(A)=SC2400(CCY) (D)=
(B)= (E)=
(C)= (F)=

No.	Lev.	Parts No.	Description	Q'ty (A)	(B)	(C)	(D)	(E)	(F)	I	R
1	1	194855-25290	SLEEVE, SI 202513	1							1
2	1	1A7050-28110	WASHER, 36X46X1	1							1
3	1	1A7050-28211	SHAFT, FRONT DRIVE	1							1
4	1	198165-28240	COLLAR, SHIFT	1							1
5	1	198165-28220	COLLAR, SPLINE	1							
6	1	194311-28230	SPRING, 21.2	1							1
7	1	1A7050-28250	COVER, FRONT	1							1
8	1	1A7050-28260	SPACER, 20X33X285	1							
9	1	1A7050-28560	PACKING, FRONT COVER	1							1
10	1	26116-102202	BOLT, M10X220 PLATED	2							
11	1	22287-100000	WASHER, 10	3							
12	1	22312-080160	PIN, PARALLEL M8X16	2							
13	1	24101-060054	BEARING, BALL 6005	1							1
14	1	24190-080001	BALL, STEEL 1/4	2							1
15	1	24421-254008	SEAL, OIL TC254008	1							1
16	1	26106-080302	BOLT, M8X 30 PLATED	3							
17	1	26116-101802	BOLT, M10X180 PLATED	1							

Remarks
(1) Refer to Fig.117 for the service part.

N:Old $\xleftrightarrow[\text{No}]{\text{Yes}}$ New, Q:Old $\xleftrightarrow[\text{Yes}]{\text{No}}$ New, R:Old $\xleftrightarrow[\text{Yes}]{\text{Yes}}$ New, S:Old $\xleftrightarrow[\text{No}]{\text{No}}$ New, W:Add, Z:Discontinued, F:Interchangeable by set, K:Q'ty Change

Copyright (C) YANMAR CO., LTD. All RightsReserved.

Fig.48. 2-4WD LEVER

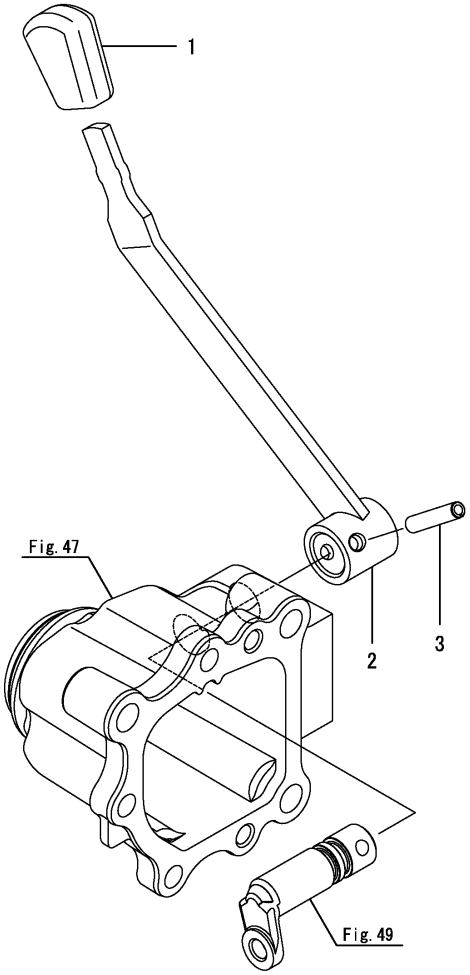

(A)=SC2400(CCY) (D)=
(B)= (E)=
(C)= (F)=

No.	Lev.	Parts No.	Description	Q'ty (A)	(B)	(C)	(D)	(E)	(F)	I	R
1	1	198273-28520	KNOB, PARKING BRAKE	1							
1-1	1 (A=F003458)	198273-28521	KNOB, PARKING BRAKE	1						N	
2	1	1A7880-28300	LEVER ASSY, 4WD	1							
3	1	22351-060032	PIN, SPRING 6.0X32	1							

N:Old $\xleftrightarrow[\text{No}]{\text{Yes}}$ New, Q:Old $\xleftrightarrow[\text{Yes}]{\text{No}}$ New, R:Old $\xleftrightarrow[\text{Yes}]{\text{Yes}}$ New, S:Old $\xleftrightarrow[\text{No}]{\text{No}}$ New, W:Add, Z:Discontinued, F:Interchangeable by set, K:Q'ty Change

Copyright (C) YANMAR CO., LTD. All RightsReserved.

Fig.49. MFWD SHIFT

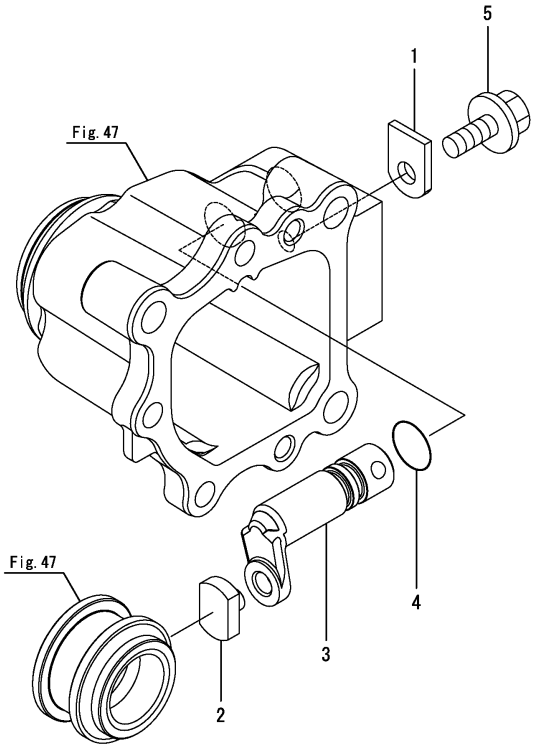

(A)=SC2400(CCY) (D)=
(B)= (E)=
(C)= (F)=

No.	Lev.	Parts No.	Description	Q'ty (A)	(B)	(C)	(D)	(E)	(F)	I	R
1	1	194197-27681	PLATE, KEEP	1							1
2	1	1A7050-28331	BLOCK, SHIFT	1							1
3	1	1A7050-28351	SHAFT, SHIFT 4WD	1							1
4	1	24311-000125	O-RING, 1AP12.5	1							1
5	1	26106-080162	BOLT, M8X 16 PLATED	1							1

Remarks
(1) Refer to Fig.117 for the service part.

N:Old $\xleftrightarrow[\text{No}]{\text{Yes}}$ New, Q:Old $\xleftrightarrow[\text{Yes}]{\text{No}}$ New, R:Old $\xleftrightarrow[\text{Yes}]{\text{Yes}}$ New, S:Old $\xleftrightarrow[\text{No}]{\text{No}}$ New, W:Add, Z:Discontinued, F:Interchangeable by set, K:Q'ty Change

Copyright (C) YANMAR CO., LTD. All RightsReserved.

Fig.50. HST PEDAL

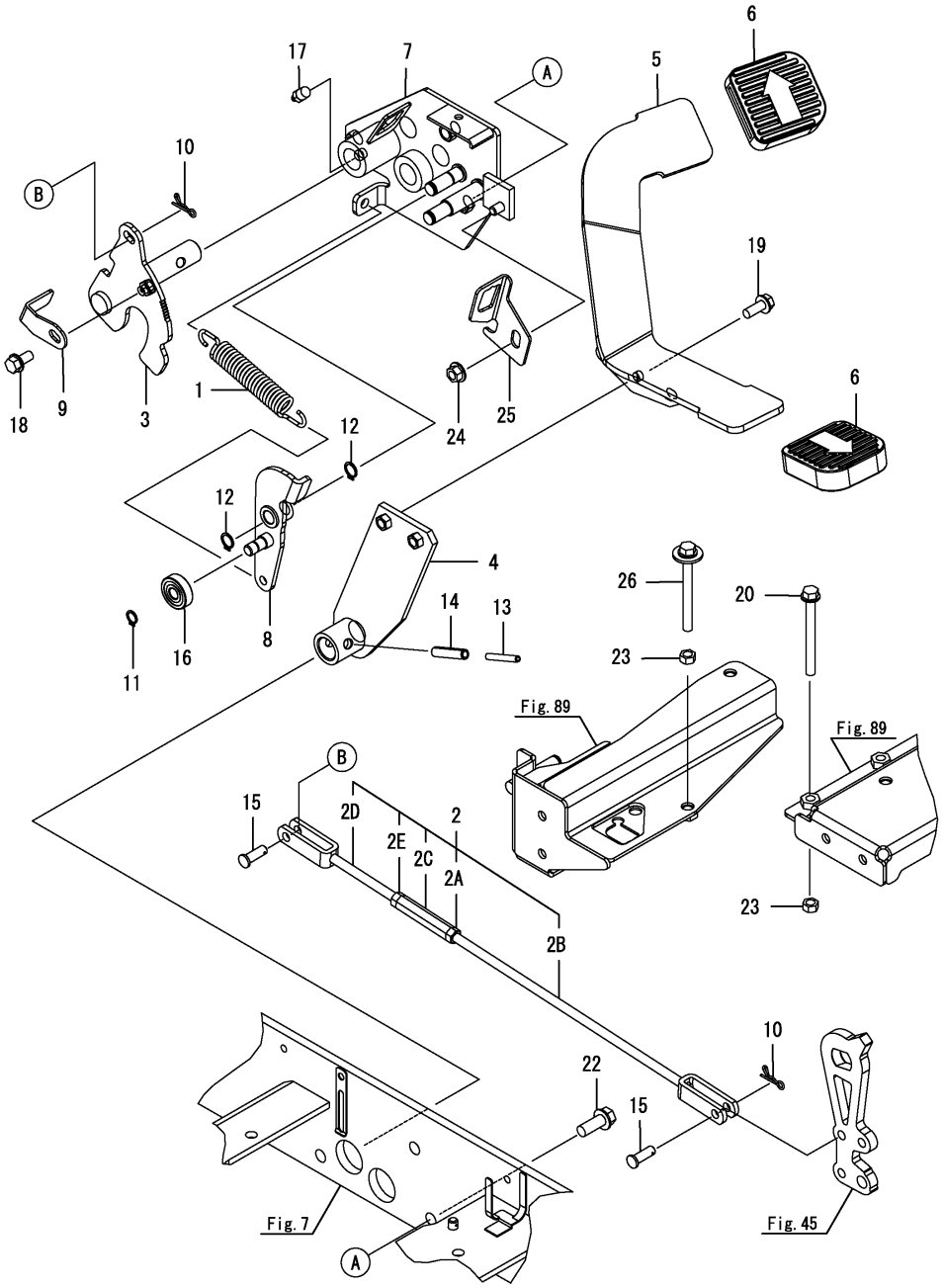

(A)=SC2400(CCY) (D)=
(B)= (E)=
(C)= (F)=

No.	Lev.	Parts No.	Description	Q'ty (A)	(B)	(C)	(D)	(E)	(F)	I	R
1	1	1A7790-01160	SPRING, RETURN	1							
2	1	1A7880-29400	ROD ASSY, HST	1							
2A	2	194990-20170	NUT, M8	1							
2B	2	1A7880-29410	ROD ASSY, HST B	1							
2C	2	1A7880-29430	TURNBUCKLE, M8X60	1							
2D	2	1A7880-29610	ROD ASSY, HST	1							
2E	2	26716-080002	NUT, M8	1							
3	1	1A7880-29500	ARM ASSY, HST	1							
4	1	1A7880-29540	PEDAL,ARM CMP	1							
4-1	1	1A7880-29541	ARM ASSY, PEDAL	1						N	
	(A=F020108)										
5	1	1A7880-29570	PEDAL ASSY, HST	1							
6	1	1A7880-29600	HEAD, PEDAL	2							
7	1	1A7880-29640	FULCRUM ASSY, PEDAL	1							
8	1	1A7880-29720	ARM ASSY, SWITCH	1							
9	1	1A7880-29780	ARM, SWITCH	1							
10	1	1C6281-52320	PIN, SNAP 8	2							
11	1	22242-000100	RING, 10	1							
12	1	22242-000120	RING, 12	2							
13	1	22351-050040	PIN, SPRING 5.0X40	1							
14	1	22351-080040	PIN, SPRING 8.0X40	1							
15	1	22487-080200	PIN, H 8X 20	2							
16	1	24104-062004	BEARING, BALL 6200UU	1							
17	1	24761-020000	NIPPLE, GREASE PT1/8	1							
18	1	26106-080162	BOLT, M8X 16 PLATED	1							
19	1	26106-080202	BOLT, M8X 20 PLATED	2							
20	1	26106-080802	BOLT, M8X 80 PLATED	1							
22	1	26106-100252	BOLT, M10X 25 PLATED	3							
23	1	26716-080002	NUT, M8	2							
24	1	194990-22140	NUT, M8	1							
25	1	1A7880-29450	ARM, SWITCH	1							
25-1	1	1A7880-29451	ARM, SWITCH	1						R	
	(A=FXXXXX)										
26	1	1A7880-29490	BOLT, PEDAL	1							
26-1	1	1A7880-29491	BOLT, PEDAL	1						N	
	(A=F010101)										
26-2	1	26106-080852	BOLT, M8X 85 PLATED	1						Q	
	(A=F020108)										

N:Old $\overset{\text{Yes}}{\underset{\text{No}}{\leftrightarrow}}$ New, Q:Old $\overset{\text{No}}{\underset{\text{Yes}}{\leftrightarrow}}$ New, R:Old $\overset{\text{Yes}}{\underset{\text{Yes}}{\leftrightarrow}}$ New, S:Old $\overset{\text{No}}{\underset{\text{No}}{\leftrightarrow}}$ New, W:Add, Z:Discontinued, F:Interchangeable by set, K:Q'ty Change

Copyright (C) YANMAR CO., LTD. All RightsReserved.

Fig.51. HST CRUISE LINK

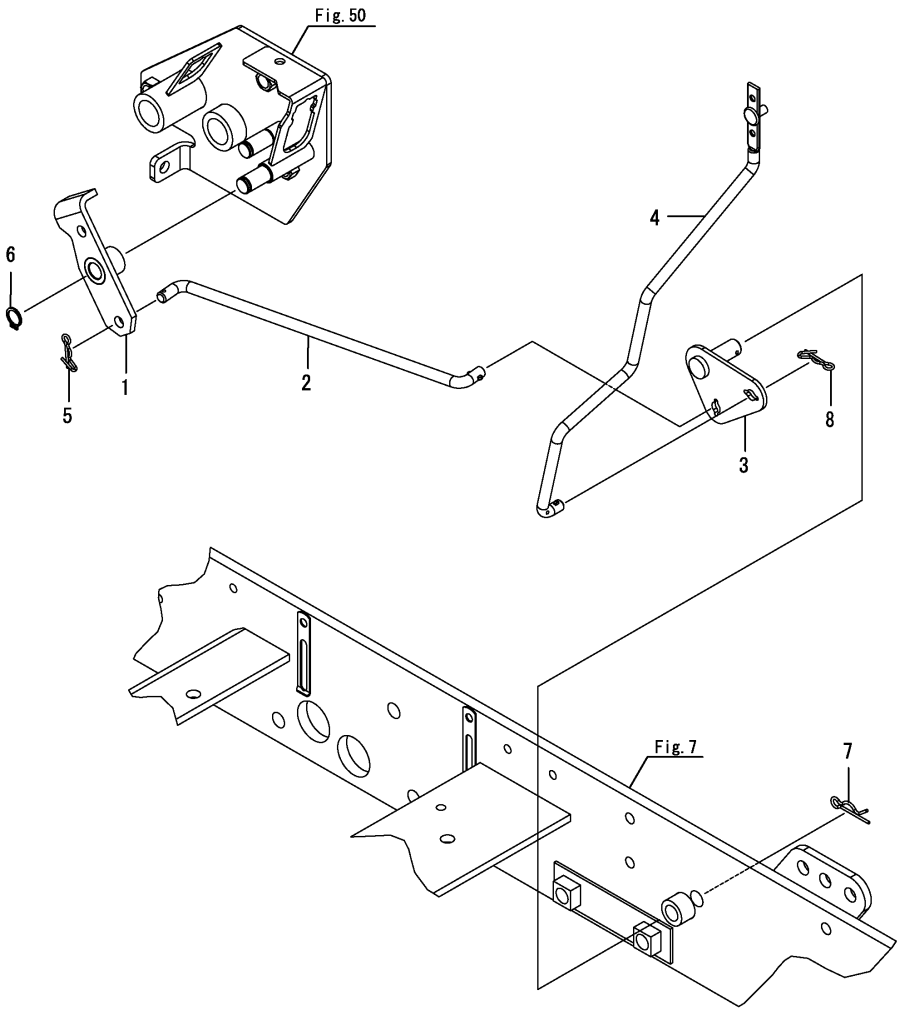

(A)=SC2400(CCY) (D)=
(B)= (E)=
(C)= (F)=

No.	Lev.	Parts No.	Description	Q'ty (A)	(B)	(C)	(D)	(E)	(F)	I	R
1	1	1A7880-29800	ARM ASSY, CRUISE	1							
1-1	1	1A7880-29801	ARM ASSY, CRUISE	1						R	
	(A=FXXXXX)										
2	1	1A7880-29830	ROD, CRUISE A	1							
3	1	1A7880-29840	LINK, CRUISE	1							
4	1	1A7880-29870	ROD ASSY, CRUISE B	1							
4-1	1	1A7880-29871	ROD ASSY, CRUISE B	1						N	
	(A=F002353)										
4-2	1	1A7880-29872	ROD ASSY, CRUISE B	1						R	
	(A=FXXXXX)										
5	1	1C6281-52320	PIN, SNAP 8	1						W	
	(A=F001630)										
6	1	22242-000120	RING, 12	1							
7	1	22372-120000	PIN, SNAP 12	1							
8	1	1C6281-52320	PIN, SNAP 8	1						W	
	(A=F001630)										

N:Old $\xleftrightarrow[\text{No}]{\text{Yes}}$ New, Q:Old $\xleftrightarrow[\text{Yes}]{\text{No}}$ New, R:Old $\xleftrightarrow[\text{Yes}]{\text{Yes}}$ New, S:Old $\xleftrightarrow[\text{No}]{\text{No}}$ New, W:Add, Z:Discontinued, F:Interchangeable by set, K:Q'ty Change

Copyright (C) YANMAR CO., LTD. All RightsReserved.

Fig.52. CRUISE LEVER

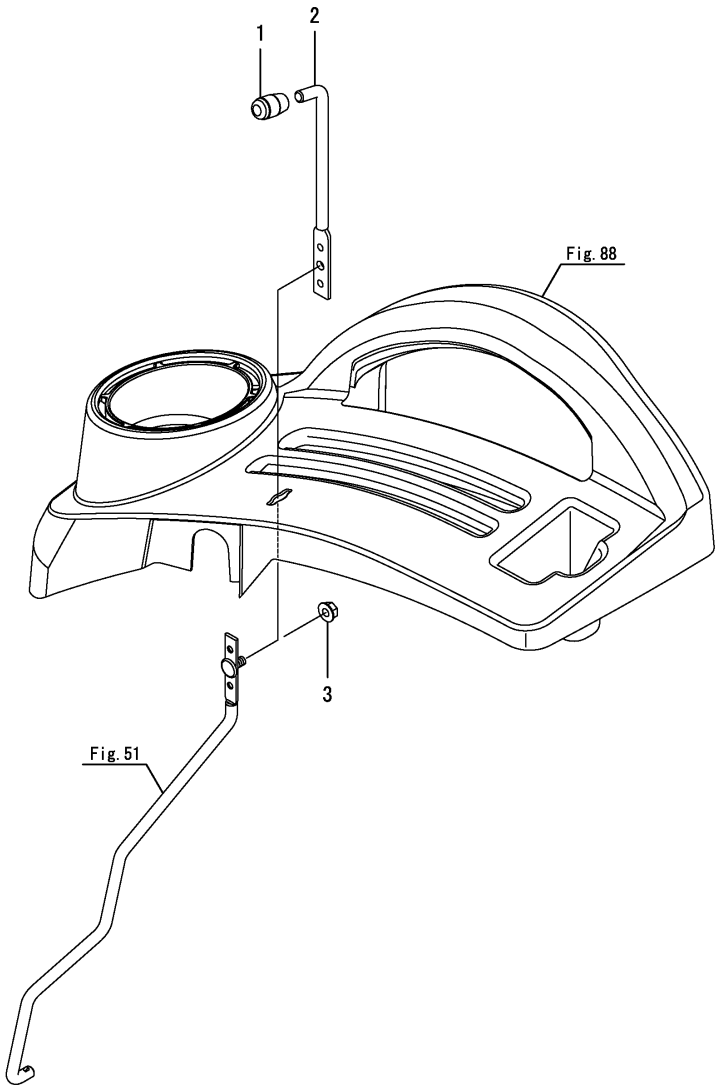

(A)=SC2400(CCY) (D)=
(B)= (E)=
(C)= (F)=

No.	Lev.	Parts No.	Description	Q'ty (A)	(B)	(C)	(D)	(E)	(F)	I	R
1	1	194550-27030	KNOB, 6.5X18X35	1							
2	1	1A7880-29900	ROD,C CRUISE	1							
2-1	1	1A7880-29901	ROD, CRUISE C	1						R	
	(A=F002353)										
3	1	26366-060002	NUT, M6	1							
3-1	1	194990-22140	NUT, M8	1						N	
	(A=F002353)										

N:Old $\xleftrightarrow[\text{No}]{\text{Yes}}$ New, Q:Old $\xleftrightarrow[\text{Yes}]{\text{No}}$ New, R:Old $\xleftrightarrow[\text{Yes}]{\text{Yes}}$ New, S:Old $\xleftrightarrow[\text{No}]{\text{No}}$ New, W:Add, Z:Discontinued, F:Interchangeable by set, K:Q'ty Change

Copyright (C) YANMAR CO., LTD. All RightsReserved.

Fig.53. GEAR PUMP

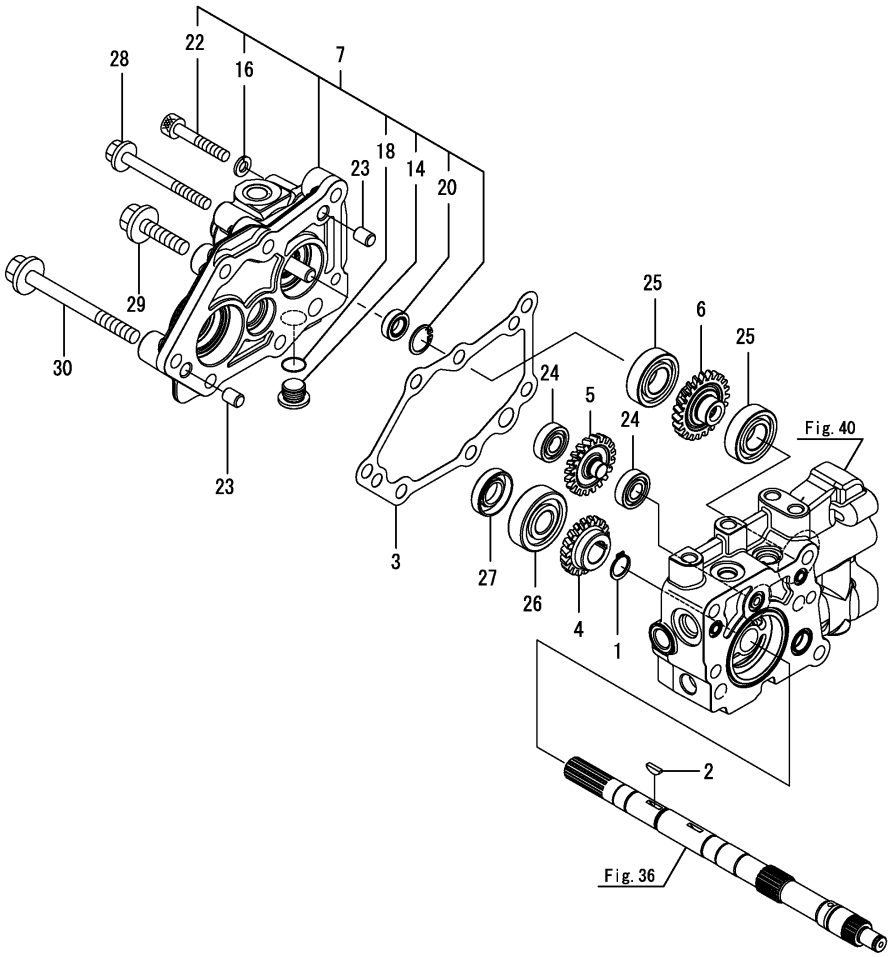

(A)=SC2400(CCY) (D)=
(B)= (E)=
(C)= (F)=

No.	Lev.	Parts No.	Description	Q'ty (A)	(B)	(C)	(D)	(E)	(F)	I	R
1	1	192167-25310	CIRCLIP,17	1							
2	1	187K06-29890	KEY, 8X3.2	1							
3	1	187K06-29620	PAKING (PUMP COVER	1							
4	1	187K06-29860	GEAR 1 (PUMP	1							
5	1	187K06-29870	GEAR 2 (PUMP	1							
6	1	187K06-29880	GEAR 3 (PUMP	1							
7	1	187K06-29900	PWS-5CG SUB CMP	1							
14	2	1A6750-29850	PLUG, G3/8	1							
16	2	22217-080000	WASHER, SPRING 8	3							
18	2	24311-000140	O-RING, 1AP14.0	1							
20	2	24421-122207	SEAL, OIL TC122207	1							
22	2	26450-080502	BOLT, M8X 50	3							
23	1	22312-100120	PIN, PARALLEL M10X12	2							
24	1	24101-060014	BEARING, BALL 6001	2							
25	1	24101-060044	BEARING, BALL 6004	2							
26	1	24101-063034	BEARING, BALL 6303	1							
27	1	24421-173508	SEAL, OIL TC173508	1							
28	1	26016-080852	BOLT, M8X 85	1							
29	1	26016-100452	BOLT, M10X 45	3							
30	1	26016-101052	BOLT, M10X105	1							

N:Old $\frac{\text{Yes}}{\text{No}}$ New, Q:Old $\frac{\text{No}}{\text{Yes}}$ New, R:Old $\frac{\text{Yes}}{\text{Yes}}$ New, S:Old $\frac{\text{No}}{\text{No}}$ New, W:Add, Z:Discontinued, F:Interchangeable by set, K:Q'ty Change

Copyright (C) YANMAR CO., LTD. All RightsReserved.

Fig.98. MOTOR ,K93

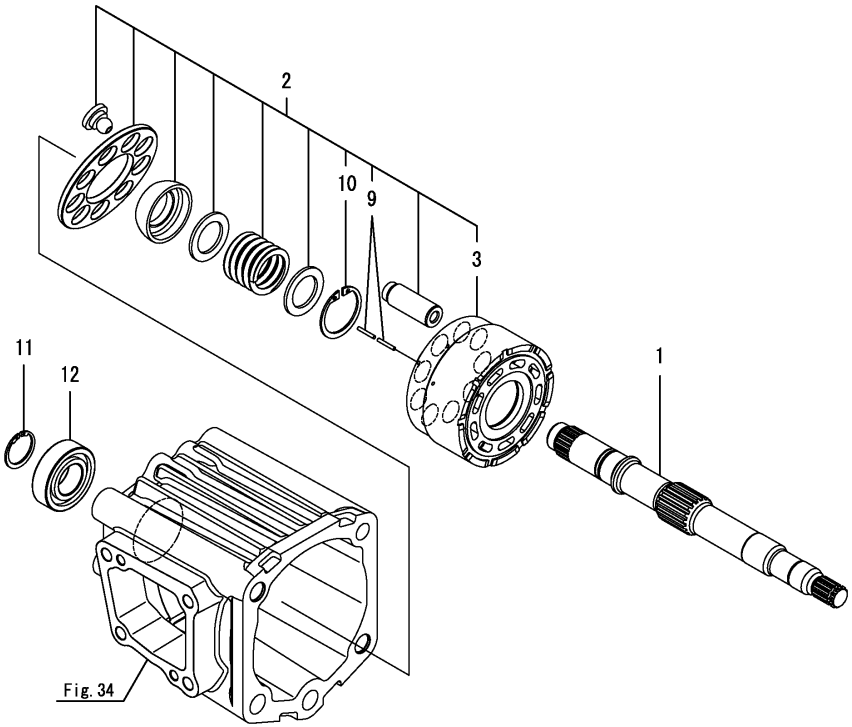

(A)=SC2400(CCY) (D)=
(B)= (E)=
(C)= (F)=

No.	Lev.	Parts No.	Description	Q'ty (A)	(B)	(C)	(D)	(E)	(F)	I	R
1	1	187K06-25020	MOTOR SHAFT (K93	1							
2	1	168HK0-29600	BLOCK ASSY, CYL	1							
3	2	168HK0-29610	BLOCK, CYLINDER	1							
9	2	168HK0-29690	PIN, F2X13.8	6							
10	2	22252-000320	RING, 32	1							
11	1	22292-000200	RING, S-20	1							
12	1	24102-060044	BEARING, BALL 6004U	1							

N:Old $\xleftrightarrow[\text{No}]{\text{Yes}}$ New, Q:Old $\xleftrightarrow[\text{Yes}]{\text{No}}$ New, R:Old $\xleftrightarrow[\text{Yes}]{\text{Yes}}$ New, S:Old $\xleftrightarrow[\text{No}]{\text{No}}$ New, W:Add, Z:Discontinued, F:Interchangeable by set, K:Q'ty Change

Copyright (C) YANMAR CO., LTD. All RightsReserved.

Fig.54. INPUT GEAR

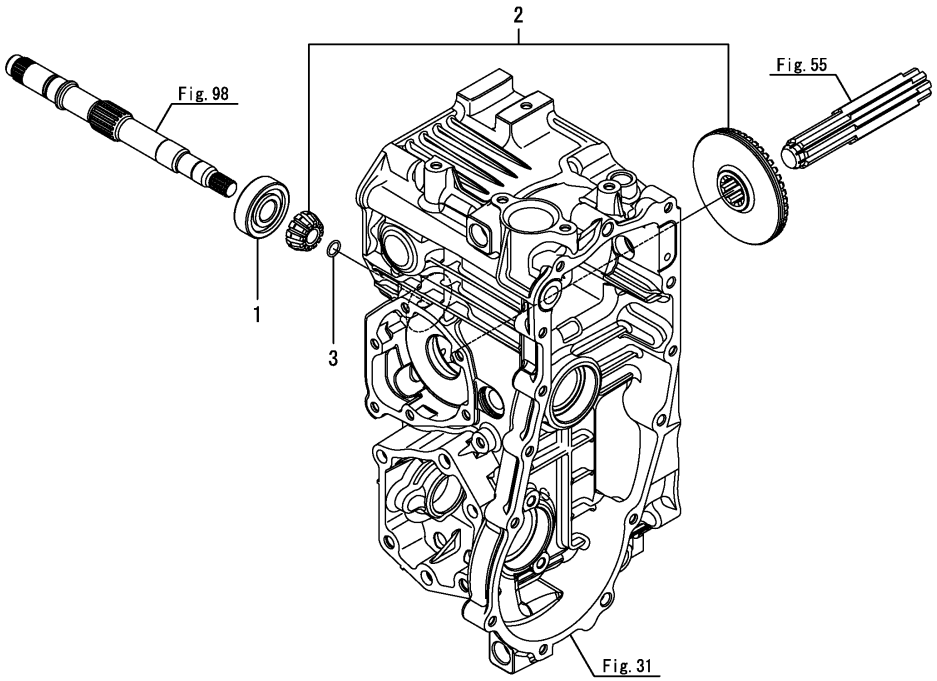

(A)=SC2400(CCY) (D)=
(B)= (E)=
(C)= (F)=

No.	Lev.	Parts No.	Description	Q'ty (A)	(B)	(C)	(D)	(E)	(F)	I	R
1	1	1A6780-13910	BEARING, 6303RSH2	1							
2	1	1A7050-31100	GEAR KIT, INPUT	1							
3	1	22207-012160	RING, 12X1.6	1							

N:Old $\xleftrightarrow[\text{No}]{\text{Yes}}$ New, Q:Old $\xleftrightarrow[\text{Yes}]{\text{No}}$ New, R:Old $\xleftrightarrow[\text{Yes}]{\text{Yes}}$ New, S:Old $\xleftrightarrow[\text{No}]{\text{No}}$ New, W:Add, Z:Discontinued, F:Interchangeable by set, K:Q'ty Change

Copyright (C) YANMAR CO., LTD. All RightsReserved.

Fig.55. DIFF.GEAR

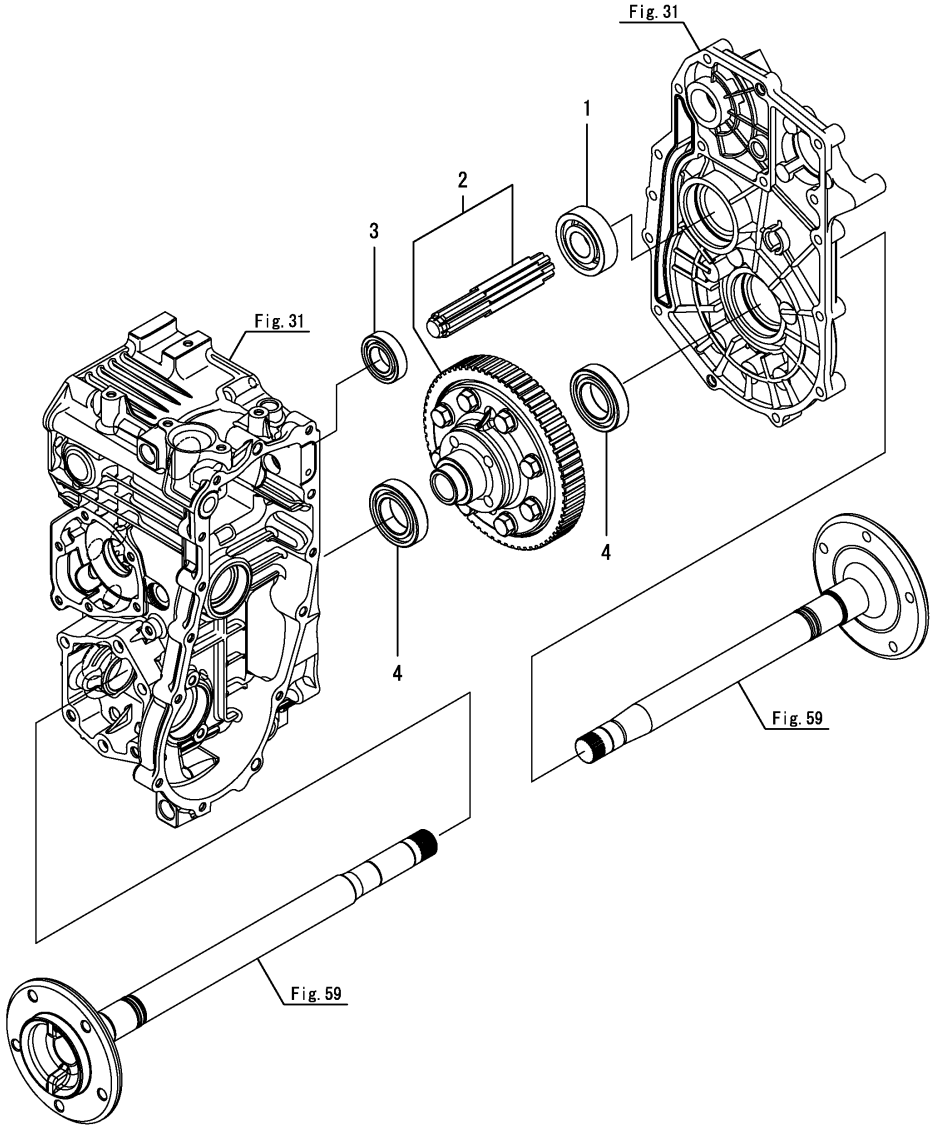

(A)=SC2400(CCY) (D)=
(B)= (E)=
(C)= (F)=

No.	Lev.	Parts No.	Description	Q'ty (A)	(B)	(C)	(D)	(E)	(F)	I	R
1	1	194555-25880	BEARING, BALL TMB305	1							
2	1	1A7050-33390	GEAR KIT, FINAL	1							
3	1	1A7050-33460	BEARING, BALL 6005	1							
4	1	24101-060074	BEARING, BALL 6007	2							

N:Old $\xleftrightarrow[\text{No}]{\text{Yes}}$ New, Q:Old $\xleftrightarrow[\text{Yes}]{\text{No}}$ New, R:Old $\xleftrightarrow[\text{Yes}]{\text{Yes}}$ New, S:Old $\xleftrightarrow[\text{No}]{\text{No}}$ New, W:Add, Z:Discontinued, F:Interchangeable by set, K:Q'ty Change

Copyright (C) YANMAR CO., LTD. All RightsReserved.

Fig.56. REAR AXLE HOUSING

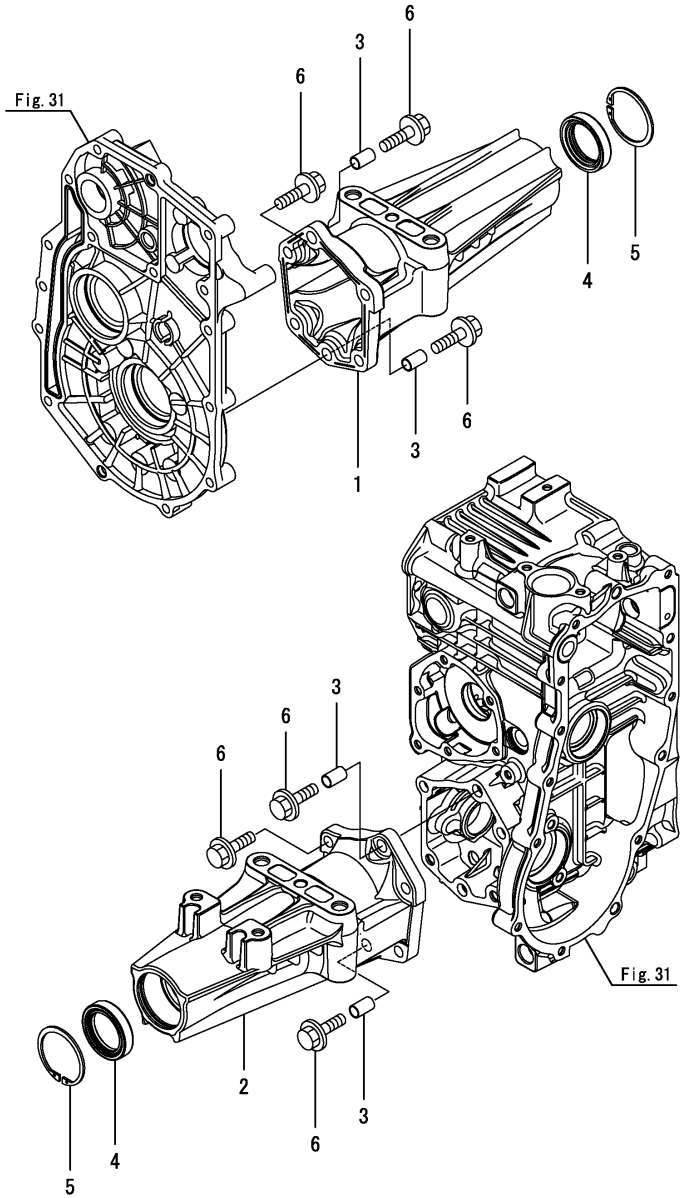

(A)=SC2400(CCY) (D)=
(B)= (E)=
(C)= (F)=

No.	Lev.	Parts No.	Description	Q'ty (A)	(B)	(C)	(D)	(E)	(F)	I	R
1	1	1A7050-32320	HOUSING, REAR AXLE R	1							
2	1	1A7051-32320	HOUSING, REAR AXLE	1							
3	1	192157-32360	COLLAR, 10X12X20	4							
4	1	192157-32370	SEAL, TC395511	2							
5	1	22252-000550	RING, 55	2							
6	1	26106-100352	BOLT, M10X 35 PLATED	12							

N:Old $\xleftrightarrow[\text{No}]{\text{Yes}}$ New, Q:Old $\xleftrightarrow[\text{Yes}]{\text{No}}$ New, R:Old $\xleftrightarrow[\text{Yes}]{\text{Yes}}$ New, S:Old $\xleftrightarrow[\text{No}]{\text{No}}$ New, W:Add, Z:Discontinued, F:Interchangeable by set, K:Q'ty Change

Copyright (C) YANMAR CO., LTD. All RightsReserved.

Fig.57. DIFF.LOCK

(A)=SC2400(CCY) (D)=
(B)= (E)=
(C)= (F)=

No.	Lev.	Parts No.	Description	Q'ty (A)	(B)	(C)	(D)	(E)	(F)	I	R
1	1	192157-33101	FORK KIT, DIFF.LOCK	1							
6	2	1C6320-52210	SPACER, 16.5X24X1	1							
7	2	22242-000160	RING, 16	2							
8	2	22351-040025	PIN, SPRING 4.0X25	1							
9	1	192157-33110	FULCRUM KIT, DIFF.	1							
12	2	22137-100000	WASHER, 10	1							
13	2	22417-200200	PIN, COTTER 2.0X20	1							
14	1	194854-33110	SLIDER, LOCK	1							
15	1	26016-080202	BOLT, M8X 20	2							

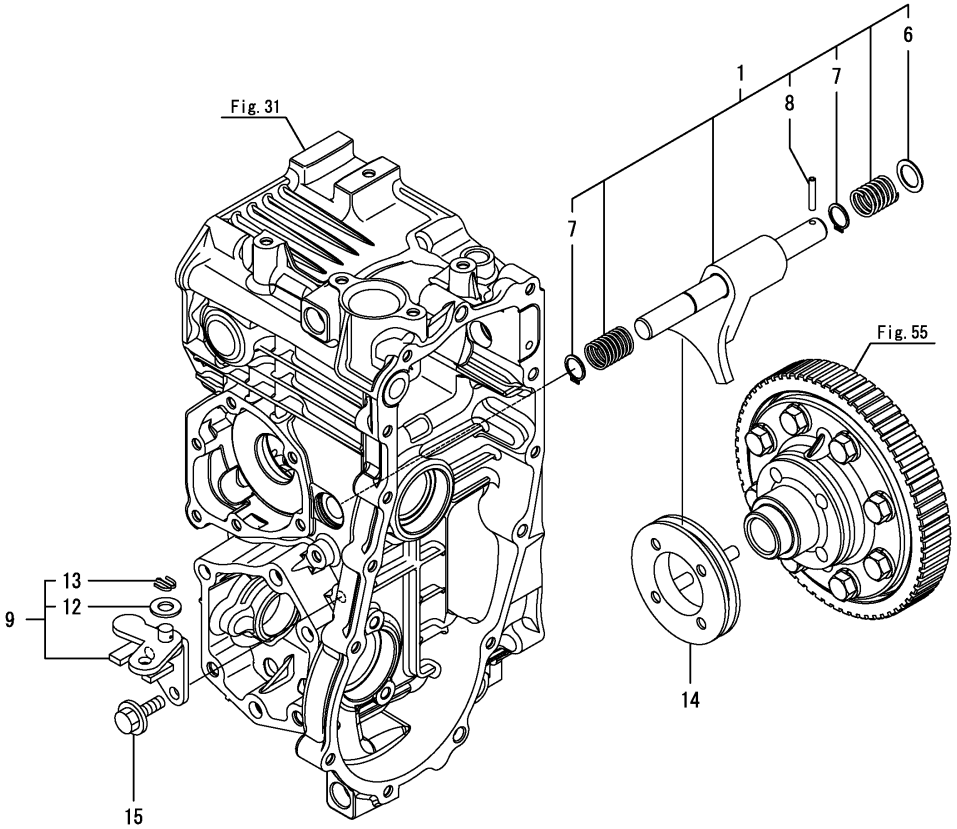

N:Old $\xleftarrow[\text{No}]{\text{Yes}}$ New, Q:Old $\xleftarrow[\text{Yes}]{\text{No}}$ New, R:Old $\xleftarrow[\text{Yes}]{\text{Yes}}$ New, S:Old $\xleftarrow[\text{No}]{\text{No}}$ New, W:Add, Z:Discontinued, F:Interchangeable by set, K:Q'ty Change

Copyright (C) YANMAR CO., LTD. All RightsReserved.

Fig.58. DIFF.PEDAL

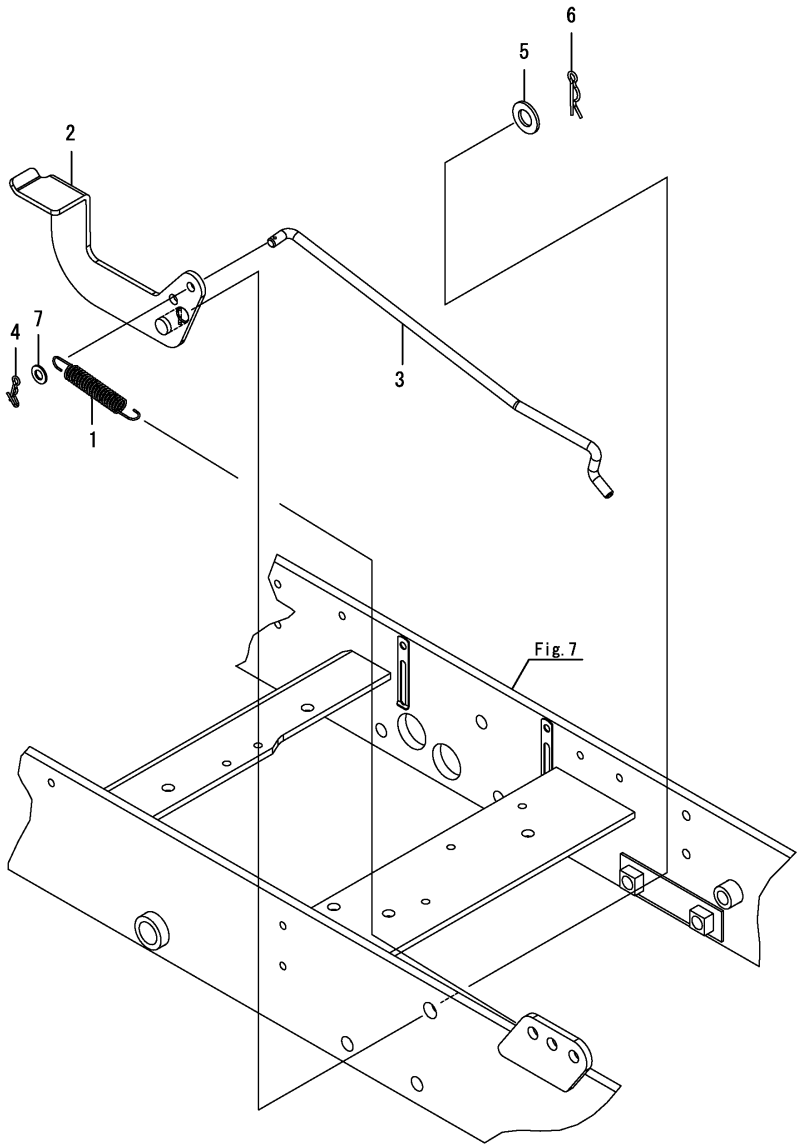

(A)=SC2400(CCY) (D)=
(B)= (E)=
(C)= (F)=

No.	Lev.	Parts No.	Description	Q'ty (A)	(B)	(C)	(D)	(E)	(F)	I	R
1	1	1A7790-01160	SPRING, RETURN	1							
2	1	1A7880-33200	PEDAL ASSY, LOCK	1							
3	1	1A7880-33250	ROD	1							
4	1	1C6281-52320	PIN, SNAP 8	1							
5	1	22137-140000	WASHER, 14	1							
6	1	22372-140000	PIN, SNAP 14	1							
7	1	22137-080000	WASHER, 8	1							

N:Old $\xleftrightarrow[\text{No}]{\text{Yes}}$ New, Q:Old $\xleftrightarrow[\text{Yes}]{\text{No}}$ New, R:Old $\xleftrightarrow[\text{Yes}]{\text{Yes}}$ New, S:Old $\xleftrightarrow[\text{No}]{\text{No}}$ New, W:Add, Z:Discontinued, F:Interchangeable by set, K:Q'ty Change

Copyright (C) YANMAR CO., LTD. All RightsReserved.

Fig.59. REAR AXLE SHAFT

(A)=SC2400(CCY) (D)=
(B)= (E)=
(C)= (F)=

No.	Lev.	Parts No.	Description	Q'ty (A)	(B)	(C)	(D)	(E)	(F)	I	R
1	1	194440-11880	SLEEVE 30X39X16	2							
2	1	198327-26560	COLLAR, 30X42X2	4							
3	1	1A7050-34110	SHAFT, REAR AXLE L	1							
4	1	1A7050-34120	SHAFT, REAR AXLE R	1							
5	1	192157-34130	CIRCLIP, 29	2							
6	1	24101-060064	BEARING, BALL 6006	2							

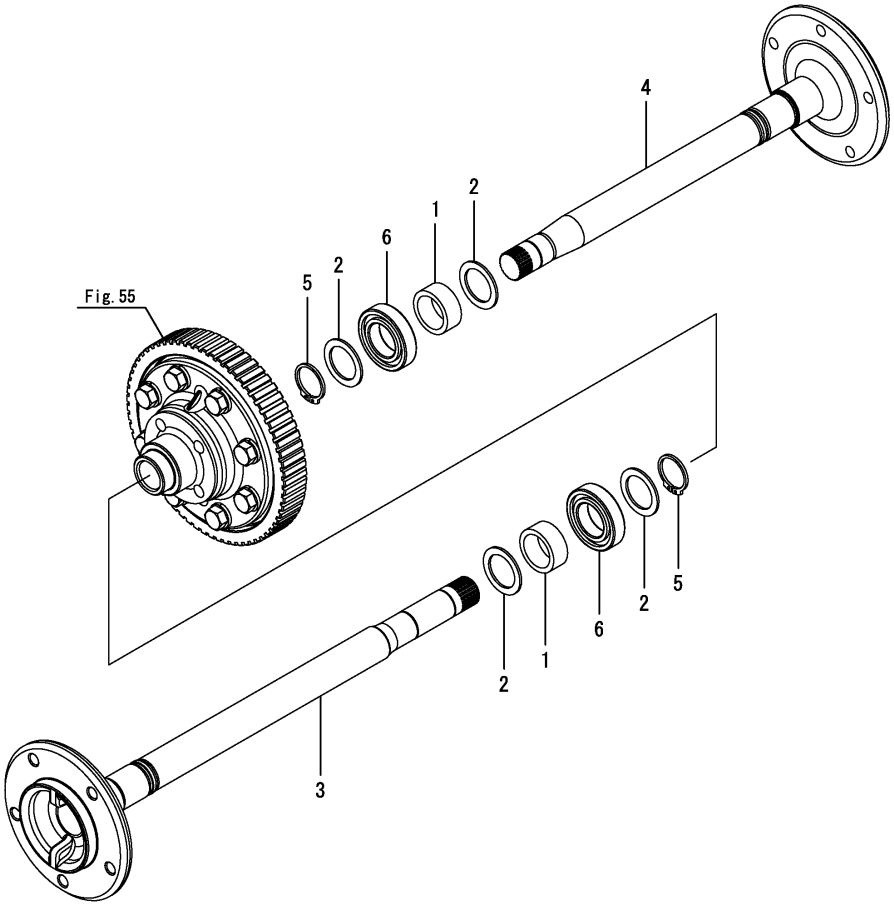

N:Old $\xleftrightarrow[\text{No}]{\text{Yes}}$ New, Q:Old $\xleftrightarrow[\text{Yes}]{\text{No}}$ New, R:Old $\xleftrightarrow[\text{Yes}]{\text{Yes}}$ New, S:Old $\xleftrightarrow[\text{No}]{\text{No}}$ New, W:Add, Z:Discontinued, F:Interchangeable by set, K:Q'ty Change

Copyright (C) YANMAR CO., LTD. All RightsReserved.

Fig.60. TIRE REAR R1

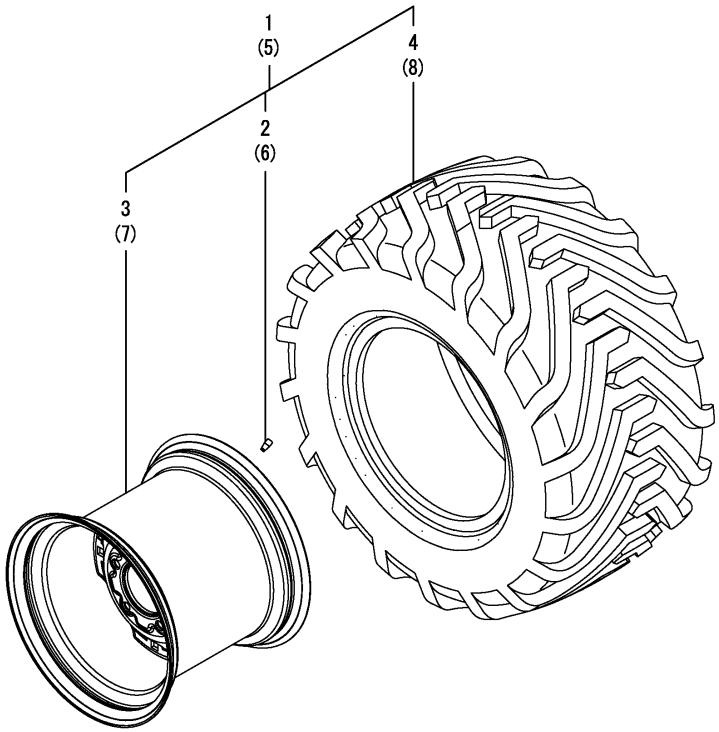

(A)=SC2400(CCY) (D)=
(B)= (E)=
(C)= (F)=

No.	Lev.	Parts No.	Description	Q'ty (A)	(B)	(C)	(D)	(E)	(F)	I	R
1	1	1A7880-34900	TIRE KIT, REAR R1 L	1							
2	2	1A7880-14840	VALVE	1							
3	2	1A7880-34830	WHEEL, 12X10.5	1							
4	2	1A7880-34920	TIRE, 26X12-12 R1	1							
5	1	1A7880-34910	TIRE KIT, REAR R1 R	1							
6	2	1A7880-14840	VALVE	1							
7	2	1A7880-34830	WHEEL, 12X10.5	1							
8	2	1A7880-34920	TIRE, 26X12-12 R1	1							

N:Old $\overset{\text{Yes}}{\underset{\text{No}}{\leftrightarrows}}$ New, Q:Old $\overset{\text{No}}{\underset{\text{Yes}}{\leftrightarrows}}$ New, R:Old $\overset{\text{Yes}}{\underset{\text{Yes}}{\leftrightarrows}}$ New, S:Old $\overset{\text{No}}{\underset{\text{No}}{\leftrightarrows}}$ New, W:Add, Z:Discontinued, F:Interchangeable by set, K:Q'ty Change

Copyright (C) YANMAR CO., LTD. All RightsReserved.

Fig.61. TIRE REAR R3

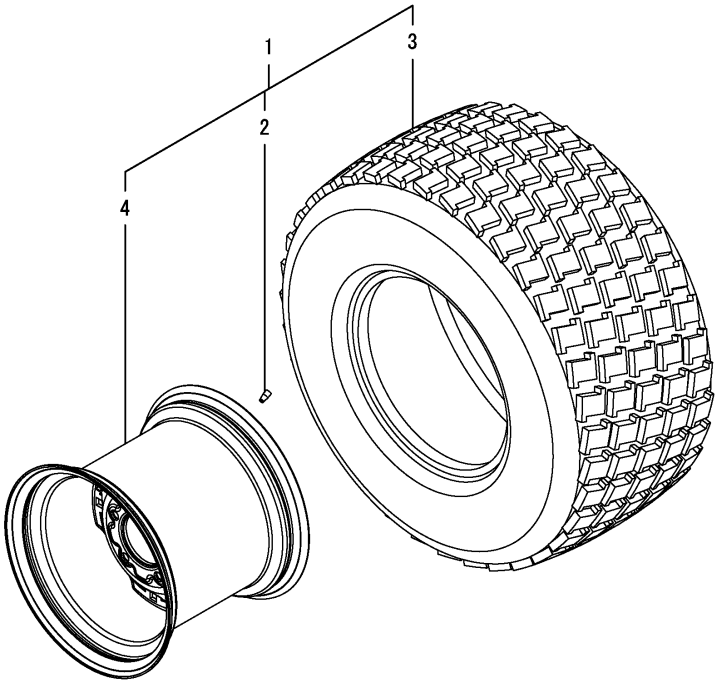

(A)=SC2400(CCY)
(B)=
(C)=
(D)=
(E)=
(F)=

No.	Lev.	Parts No.	Description	Q'ty (A)	(B)	(C)	(D)	(E)	(F)	I	R
1	1	1A7880-34700	TIRE KIT, REAR R3	2							
2	2	1A7880-14840	VALVE	2							
3	2	1A7880-34710	TIRE, 26X12-12 R3	2							
4	2	1A7880-34830	WHEEL, 12X10.5	2							

N:Old $\xleftrightarrow[\text{No}]{\text{Yes}}$ New, Q:Old $\xleftrightarrow[\text{Yes}]{\text{No}}$ New, R:Old $\xleftrightarrow[\text{Yes}]{\text{Yes}}$ New, S:Old $\xleftrightarrow[\text{No}]{\text{No}}$ New, W:Add, Z:Discontinued, F:Interchangeable by set, K:Q'ty Change

Copyright (C) YANMAR CO., LTD. All RightsReserved.

Fig.62. TIRE REAR R4

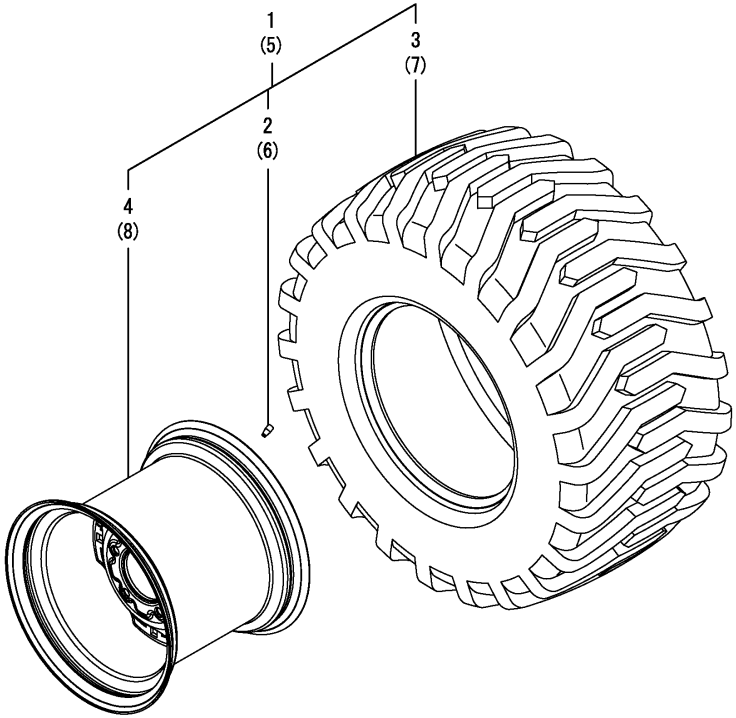

(A)=SC2400(CCY) (D)=
(B)= (E)=
(C)= (F)=

No.	Lev.	Parts No.	Description	Q'ty (A)	(B)	(C)	(D)	(E)	(F)	I	R
1	1	1A7880-34800	TIRE KIT, REAR R4 L	1							
2	2	1A7880-14840	VALVE	1							
3	2	1A7880-34820	TIRE, 26X12-12 R4	1							
4	2	1A7880-34830	WHEEL, 12X10.5	1							
5	1	1A7880-34810	TIRE KIT, REAR R4 R	1							
6	2	1A7880-14840	VALVE	1							
7	2	1A7880-34820	TIRE, 26X12-12 R4	1							
8	2	1A7880-34830	WHEEL, 12X10.5	1							

N:Old $\xleftrightarrow[\text{No}]{\text{Yes}}$ New, Q:Old $\xleftrightarrow[\text{Yes}]{\text{No}}$ New, R:Old $\xleftrightarrow[\text{Yes}]{\text{Yes}}$ New, S:Old $\xleftrightarrow[\text{No}]{\text{No}}$ New, W:Add, Z:Discontinued, F:Interchangeable by set, K:Q'ty Change

Copyright (C) YANMAR CO., LTD. All RightsReserved.

Fig.63. HUB BOLT

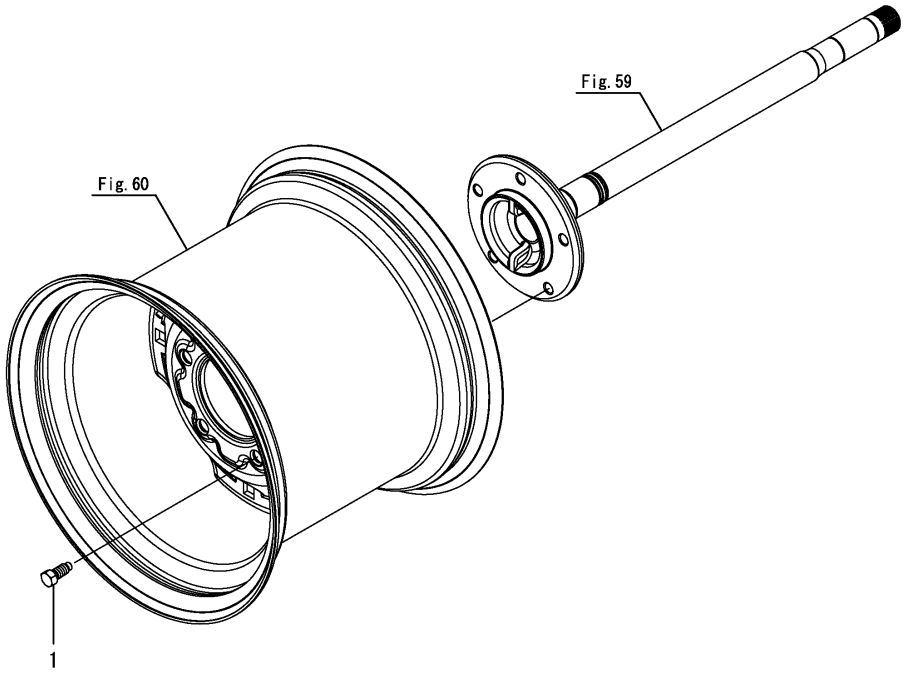

(A)=SC2400(CCY) (D)=
(B)= (E)=
(C)= (F)=

No.	Lev.	Parts No.	Description	Q'ty (A)	(B)	(C)	(D)	(E)	(F)	I	R
1	1	1A7880-34180	BOLT, 7/16-20UNF	10							

N:Old $\xleftarrow[\text{No}]{\text{Yes}}$ New, Q:Old $\xleftarrow[\text{Yes}]{\text{No}}$ New, R:Old $\xleftarrow[\text{Yes}]{\text{Yes}}$ New, S:Old $\xleftarrow[\text{No}]{\text{No}}$ New, W:Add, Z:Discontinued, F:Interchangeable by set, K:Q'ty Change

Copyright (C) YANMAR CO., LTD. All RightsReserved.

Fig.64. DISC BRAKE

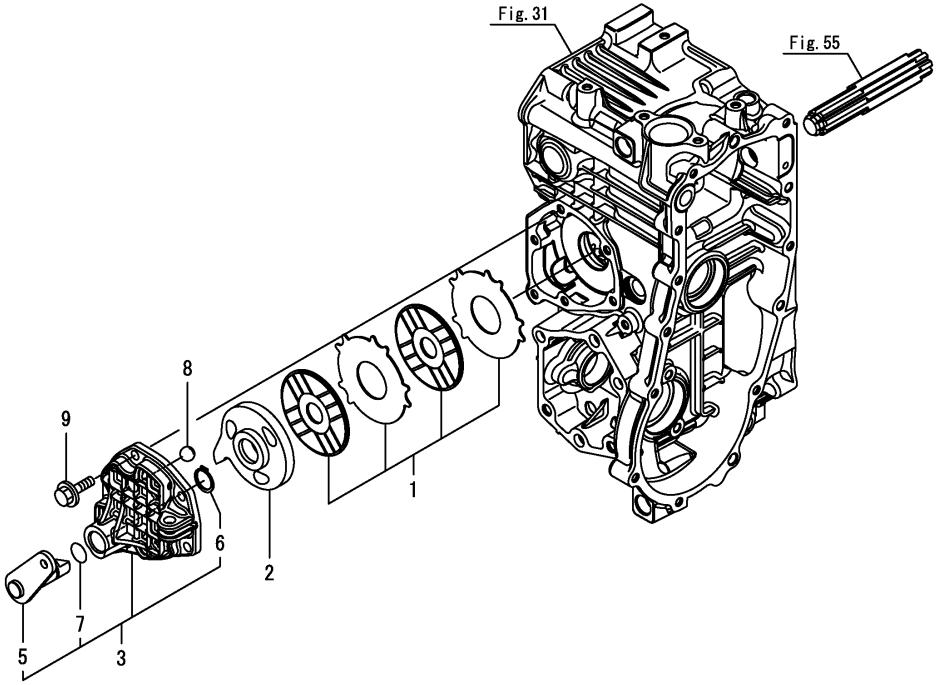

(A)=SC2400(CCY) (D)=
(B)= (E)=
(C)= (F)=

No.	Lev.	Parts No.	Description	Q'ty (A)	(B)	(C)	(D)	(E)	(F)	I	R
1	1	192157-36300	PLATE KIT, BRAKE	1							
2	1	1A7130-36330	ACTUATOR	1							
3	1	187K06-36340	CAM KIT, BRAKE	1							
3-1	1 (A=F002697)	187K06-36341	CAM KIT, BRAKE	1						S	
5	2	187K06-36350	SHAFT ASSY, LEVER	1							
6	2	22242-000200	RING, 20	1							
7	2	24311-000160	O-RING, 1AP16.0	1							
8	1	24190-160001	BALL, STEEL 1/2	3							
9	1	26106-080252	BOLT, M8X 25 PLATED	6							

N:Old $\overset{\text{Yes}}{\underset{\text{No}}{\leftrightarrows}}$ New, Q:Old $\overset{\text{No}}{\underset{\text{Yes}}{\leftrightarrows}}$ New, R:Old $\overset{\text{Yes}}{\underset{\text{Yes}}{\leftrightarrows}}$ New, S:Old $\overset{\text{No}}{\underset{\text{No}}{\leftrightarrows}}$ New, W:Add, Z:Discontinued, F:Interchangeable by set, K:Q'ty Change

Copyright (C) YANMAR CO., LTD. All RightsReserved.

Fig.65. BRAKE PEDAL

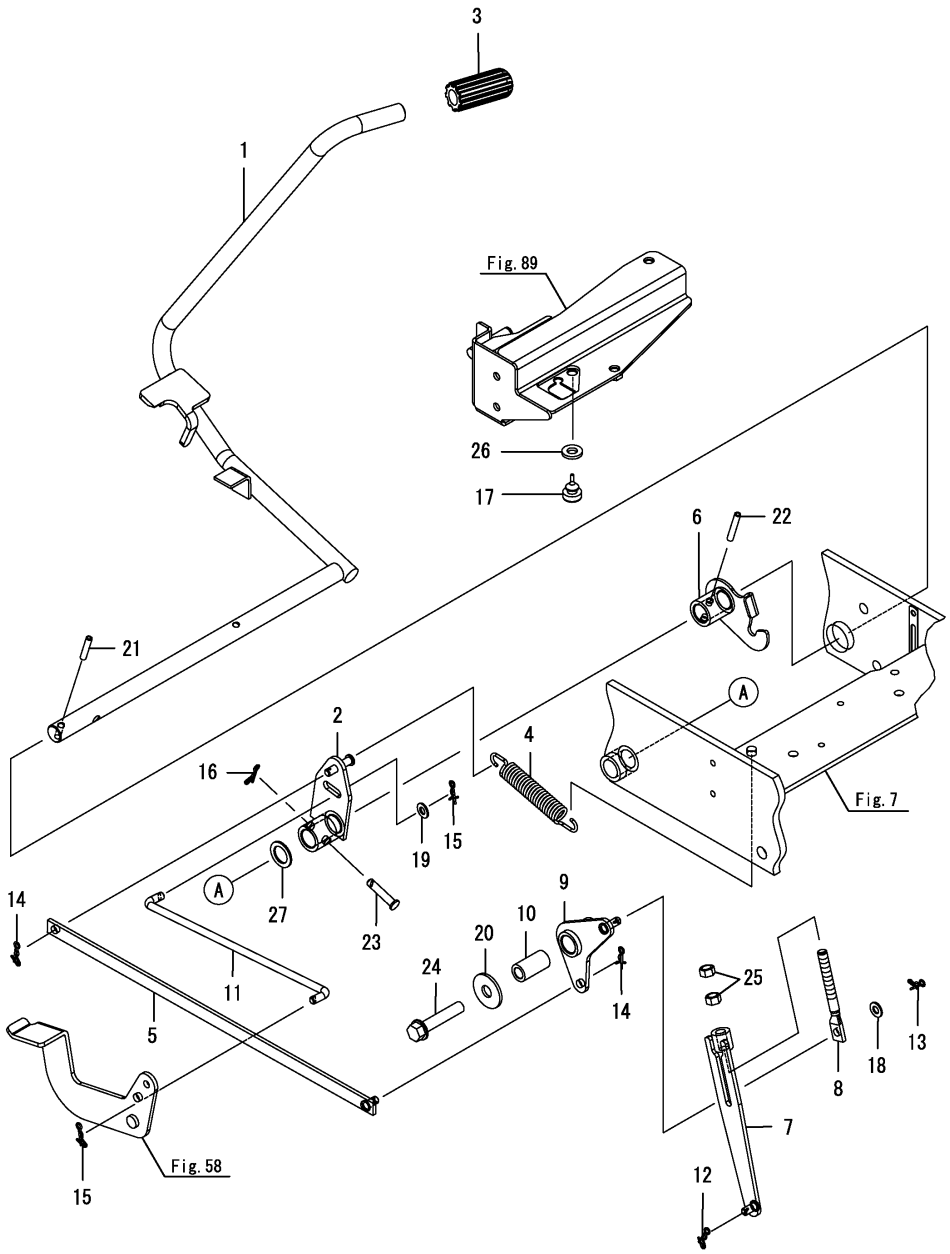

(A)=SC2400(CCY) (D)=
(B)= (E)=
(C)= (F)=

No.	Lev.	Parts No.	Description	Q'ty (A)	(B)	(C)	(D)	(E)	(F)	I	R
1	1	1A7880-37100	PEDAL ASSY, BRAKE	1							
2	1	1A7880-37150	ARM ASSY, BRAKE	1							
3	1	1A7880-37200	HEAD, PEDAL R	1							
4	1	1A7880-37220	SPRING, RETURN	1							
5	1	1A7880-37250	ROD ASSY, BRAKE	1							
6	1	1A7880-37310	ARM ASSY, RELEASE	1							
7	1	1A7880-37350	ROD ASSY, PUSH	1							
8	1	1A7880-37390	SCREW, ADJUST	1							
9	1	1A7880-37400	ARM ASSY, BRAKE	1							
10	1	1A7880-37440	COLLAR	1							
10-1	1	1A7880-37441	COLLAR	1						R	
	(A=FZZZZZ)										
11	1	1A7880-37450	ROD, LINK	1							
12	1	1C6281-52320	PIN, SNAP 8	1							
13	1	1C6281-52320	PIN, SNAP 8	1							
14	1	1C6281-52320	PIN, SNAP 8	2							
15	1	1C6281-52320	PIN, SNAP 8	2							
16	1	1C6281-52320	PIN, SNAP 8	1							
17	1	194330-62530	STOPPER, PEDAL	1							
18	1	22137-080000	WASHER, 8	1							
19	1	22137-080000	WASHER, 8	1							
20	1	22157-120000	WASHER, 12	1							
21	1	22351-060032	PIN, SPRING 6.0X32	1							
22	1	22351-060040	PIN, SPRING 6.0X40	1							
23	1	22487-080350	PIN, H 8X 35	1							
24	1	26106-120602	BOLT, M12X 60 PLATED	1							
25	1	26716-100002	NUT, M10	2							
26	1	194145-04810	WASHER 10	1						Z	
	(A=F010101)										
27	1	1A7510-36490	WASHER, 20X30X2	1						W	
	(A=FXXXXX)										

N:Old $\overset{\text{Yes}}{\underset{\text{No}}{\leftrightarrow}}$ New, Q:Old $\overset{\text{No}}{\underset{\text{Yes}}{\leftrightarrow}}$ New, R:Old $\overset{\text{Yes}}{\underset{\text{Yes}}{\leftrightarrow}}$ New, S:Old $\overset{\text{No}}{\underset{\text{No}}{\leftrightarrow}}$ New, W:Add, Z:Discontinued, F:Interchangeable by set, K:Q'ty Change

Copyright (C) YANMAR CO., LTD. All RightsReserved.

Fig.66. PARKING BRAKE

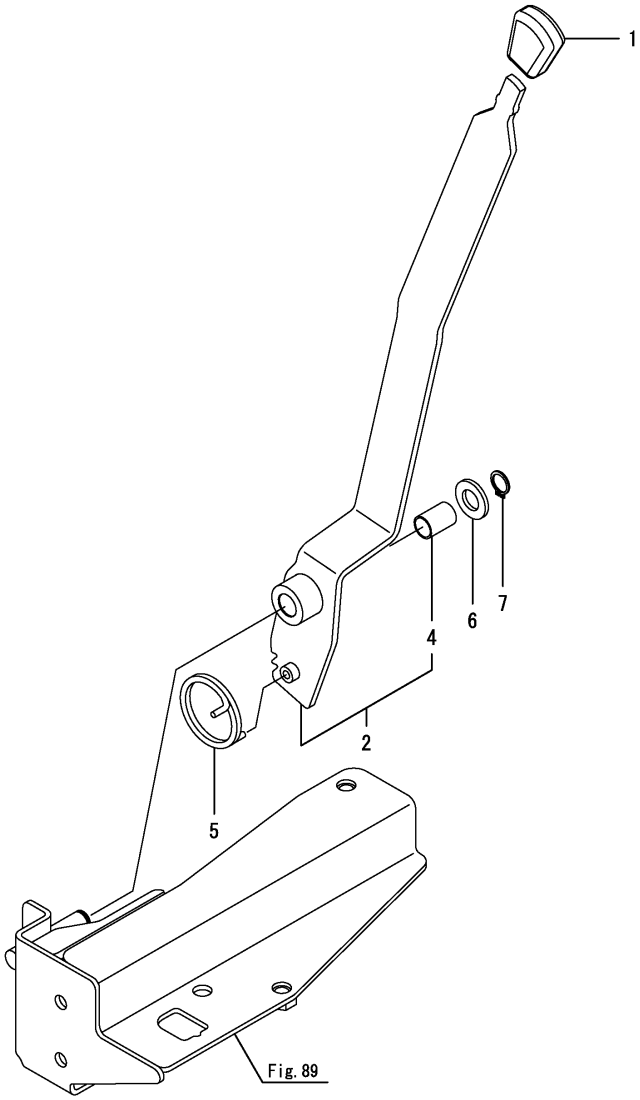

(A)=SC2400(CCY) (D)=
(B)= (E)=
(C)= (F)=

No.	Lev.	Parts No.	Description	Q'ty (A)	(B)	(C)	(D)	(E)	(F)	I	R
1	1	198273-28520	KNOB, PARKING BRAKE	1							
1-1	1	198273-28521	KNOB, PARKING BRAKE	1						N	
	(A=F003458)										
2	1	1A7880-37490	LEVER ASSY, PARKING	1							
4	2	24550-012200	BUSH, 12X20	1							
5	1	198475-37690	SPRING, LOCK	1							
6	1	22137-120000	WASHER, 12	1							
7	1	22242-000120	RING, 12	1							

N:Old $\frac{\text{Yes}}{\text{No}}$ New, Q:Old $\frac{\text{No}}{\text{Yes}}$ New, R:Old $\frac{\text{Yes}}{\text{Yes}}$ New, S:Old $\frac{\text{No}}{\text{No}}$ New, W:Add, Z:Discontinued, F:Interchangeable by set, K:Q'ty Change

Copyright (C) YANMAR CO., LTD. All RightsReserved.

Fig.67. LIFT CYLINDER

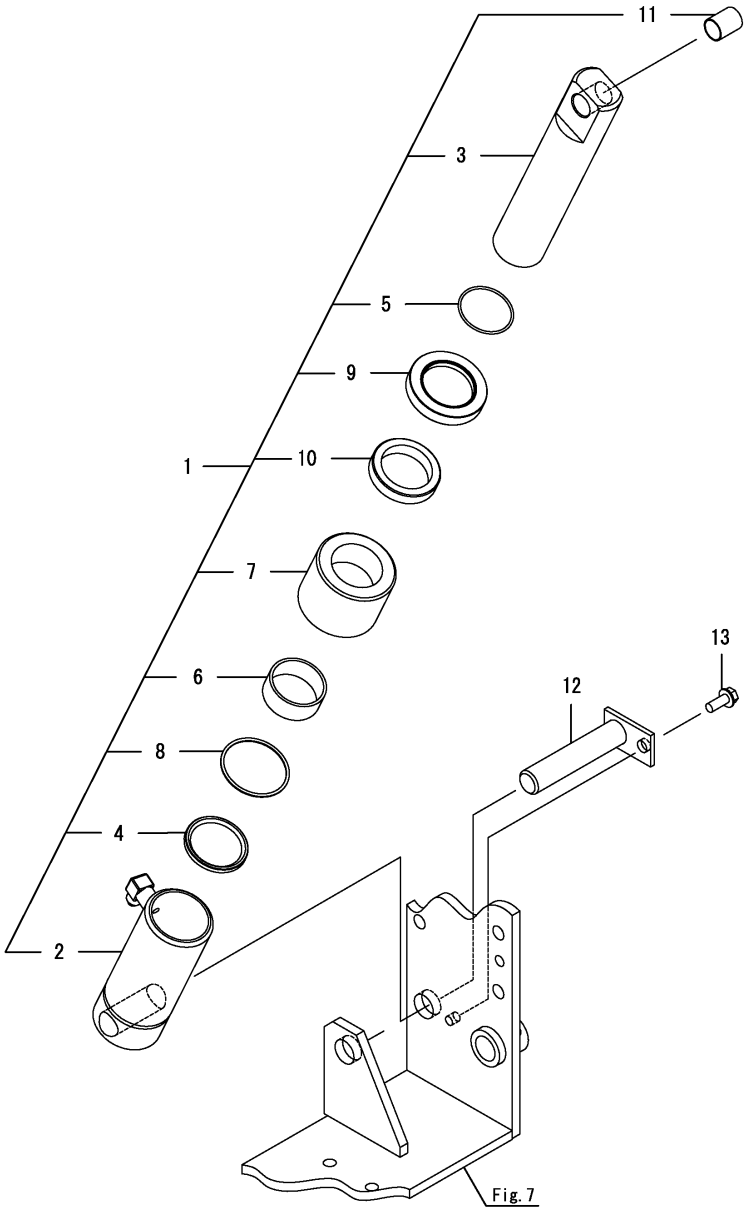

(A)=SC2400(CCY) (D)=
(B)= (E)=
(C)= (F)=

No.	Lev.	Parts No.	Description	Q'ty (A)	(B)	(C)	(D)	(E)	(F)	I	R
1	1	1A7880-43100	CYLINDER ASSY, LIFT	1							
2	2	1A7880-43200	TUBE ASSY	1							
3	2	1A7880-43300	ROD	1							
4	2	1A7880-43350	SPACER	1							
5	2	1A7880-43370	RING, STEEL	1							
6	2	1A7880-43390	BUSH, DU	1							
7	2	1A7880-43400	COVER, HEAD	1							
8	2	1A7880-43460	O-RING	1							
9	2	1A7880-43470	SEAL, DUST	1							
10	2	1A7880-43480	SEAL, ROD	1							
11	2	24550-018250	BUSH, 18X25	1							
12	1	1A7880-44740	PIN ASSY, CYLINDER	1							
13	1	26106-100252	BOLT, M10X 25 PLATED	1							

N:Old $\xleftrightarrow[\text{No}]{\text{Yes}}$ New, Q:Old $\xleftrightarrow[\text{Yes}]{\text{No}}$ New, R:Old $\xleftrightarrow[\text{Yes}]{\text{Yes}}$ New, S:Old $\xleftrightarrow[\text{No}]{\text{No}}$ New, W:Add, Z:Discontinued, F:Interchangeable by set, K:Q'ty Change

Copyright (C) YANMAR CO., LTD. All RightsReserved.

Fig.68. LIFT ARM

(A)=SC2400(CCY) (D)=
(B)= (E)=
(C)= (F)=

No.	Lev.	Parts No.	Description	Q'ty (A)	(B)	(C)	(D)	(E)	(F)	I	R
1	1	1A7880-44400	ARM KIT, LIFT	1							
2	1	194130-44480	PIN, LIFT ARM	2							
3	1	1A7880-44700	PIN ASSY, ARM	1							
4	1	22217-160000	WASHER, SPRING 16	2							
5	1	26106-080202	BOLT, M8X 20 PLATED	1							
6	1	26736-160002	NUT, M16	2							

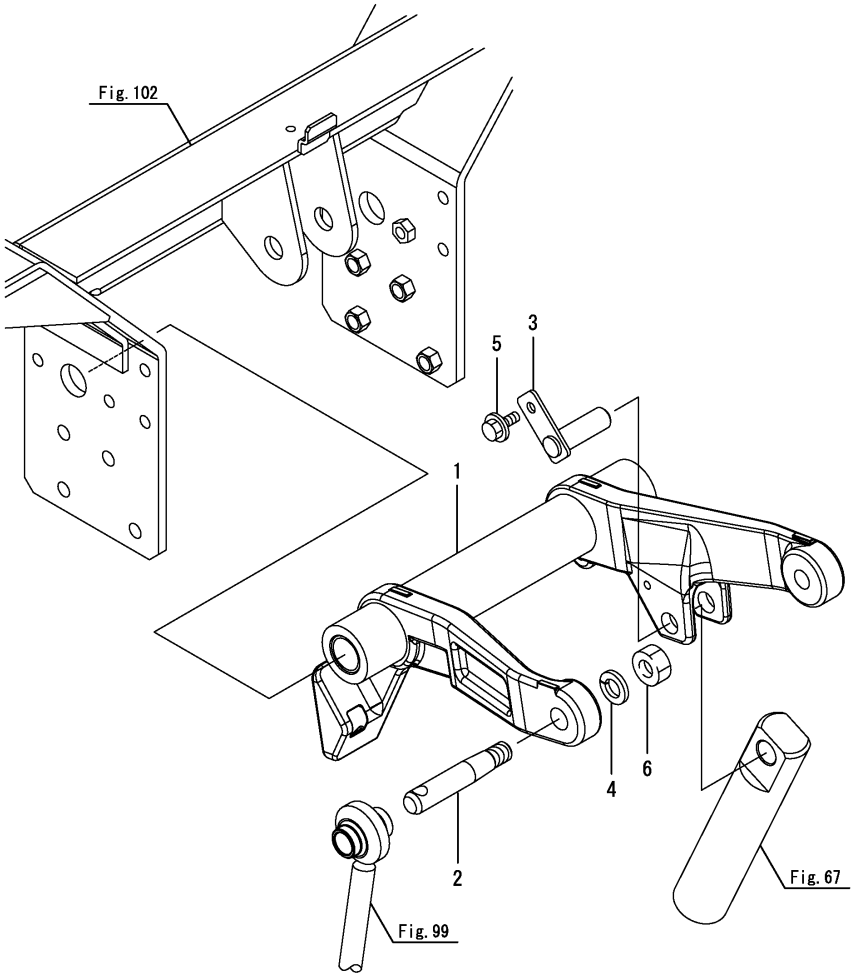

N:Old $\xleftrightarrow[\text{No}]{\text{Yes}}$ New, Q:Old $\xleftrightarrow[\text{Yes}]{\text{No}}$ New, R:Old $\xleftrightarrow[\text{Yes}]{\text{Yes}}$ New, S:Old $\xleftrightarrow[\text{No}]{\text{No}}$ New, W:Add, Z:Discontinued, F:Interchangeable by set, K:Q'ty Change

Copyright (C) YANMAR CO., LTD. All RightsReserved.

Fig.69. CONTROL VALVE

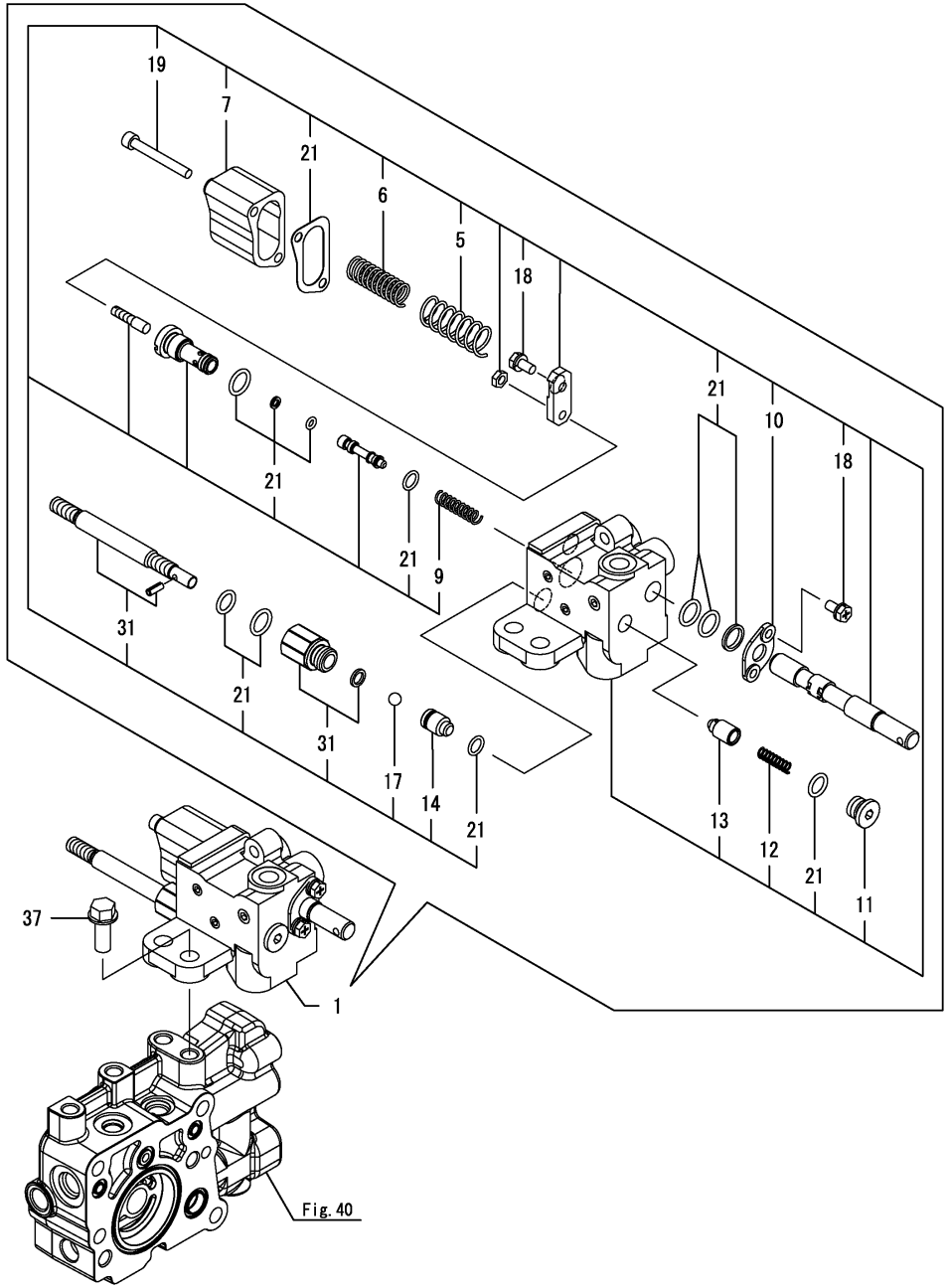

(A)=SC2400(CCY) (D)=
(B)= (E)=
(C)= (F)=

No.	Lev.	Parts No.	Description	Q'ty (A)	(B)	(C)	(D)	(E)	(F)	I	R
1	1	1A7880-45100	VALVE ASSY, LIFT	1							
5	2	1A7880-45530	SPLING, LIFT VALVE	1							
6	2	1A7880-45540	SPLING, LIFT VALVE	1							
7	2	1A7880-45560	COVER, LIFT VALVE	1							
9	2	1A7880-45610	SPRING, MECHANICAL	1							
10	2	1A7880-45620	PLATE, VALVE	1							
11	2	1A7880-45640	PLUG, LIFT VALVE	1							
12	2	1A7880-45650	SPRING, LIFT VALVE	1							
13	2	1A7880-45660	POPPET, CHECK	1							
14	2	1A7880-45700	PLUNGER, LIFT VALVE	1							
17	2	24190-100001	BALL, STEEL 5/16	1							
18	2	26013-060129	BOLT, M6X 12	3							
19	2	26450-060502	BOLT M 6X 50	2							
21	2	1A7880-45800	SEAL KIT, LIFT VALVE	1							
31	2	1A7880-45830	BOLT, STOP	1							
37	1	26106-100252	BOLT, M10X 25 PLATED	2							

N:Old $\overset{\text{Yes}}{\underset{\text{No}}{\leftrightarrows}}$ New, Q:Old $\overset{\text{No}}{\underset{\text{Yes}}{\leftrightarrows}}$ New, R:Old $\overset{\text{Yes}}{\underset{\text{Yes}}{\leftrightarrows}}$ New, S:Old $\overset{\text{No}}{\underset{\text{No}}{\leftrightarrows}}$ New, W:Add, Z:Discontinued, F:Interchangeable by set, K:Q'ty Change

Copyright (C) YANMAR CO., LTD. All RightsReserved.

Fig.70. STOP VALVE

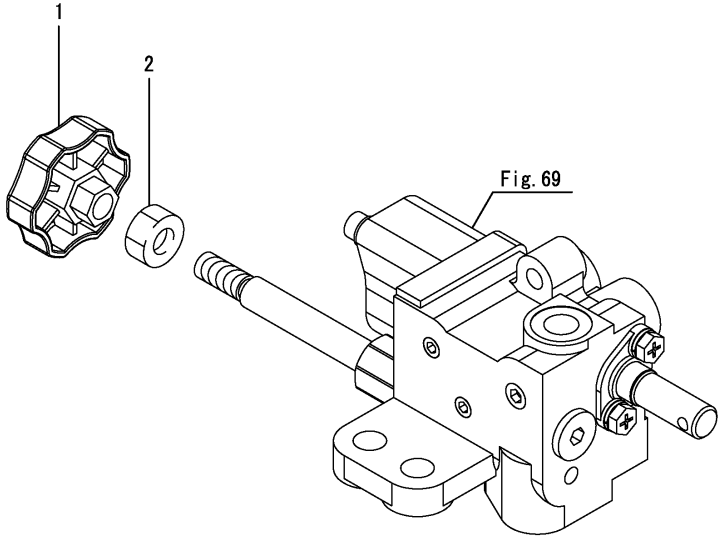

(A)=SC2400(CCY) (D)=
(B)= (E)=
(C)= (F)=

No.	Lev.	Parts No.	Description	Q'ty (A)	(B)	(C)	(D)	(E)	(F)	I	R
1	1	1A8160-46670	KNOB, VALVE	1							
2	1	26716-100002	NUT, M10	1							

N:Old $\xleftarrow[\text{No}]{\text{Yes}}$ New, Q:Old $\xleftarrow[\text{Yes}]{\text{No}}$ New, R:Old $\xleftarrow[\text{Yes}]{\text{Yes}}$ New, S:Old $\xleftarrow[\text{No}]{\text{No}}$ New, W:Add, Z:Discontinued, F:Interchangeable by set, K:Q'ty Change

Copyright (C) YANMAR CO., LTD. All RightsReserved.

Fig.71. VALVE,SCV

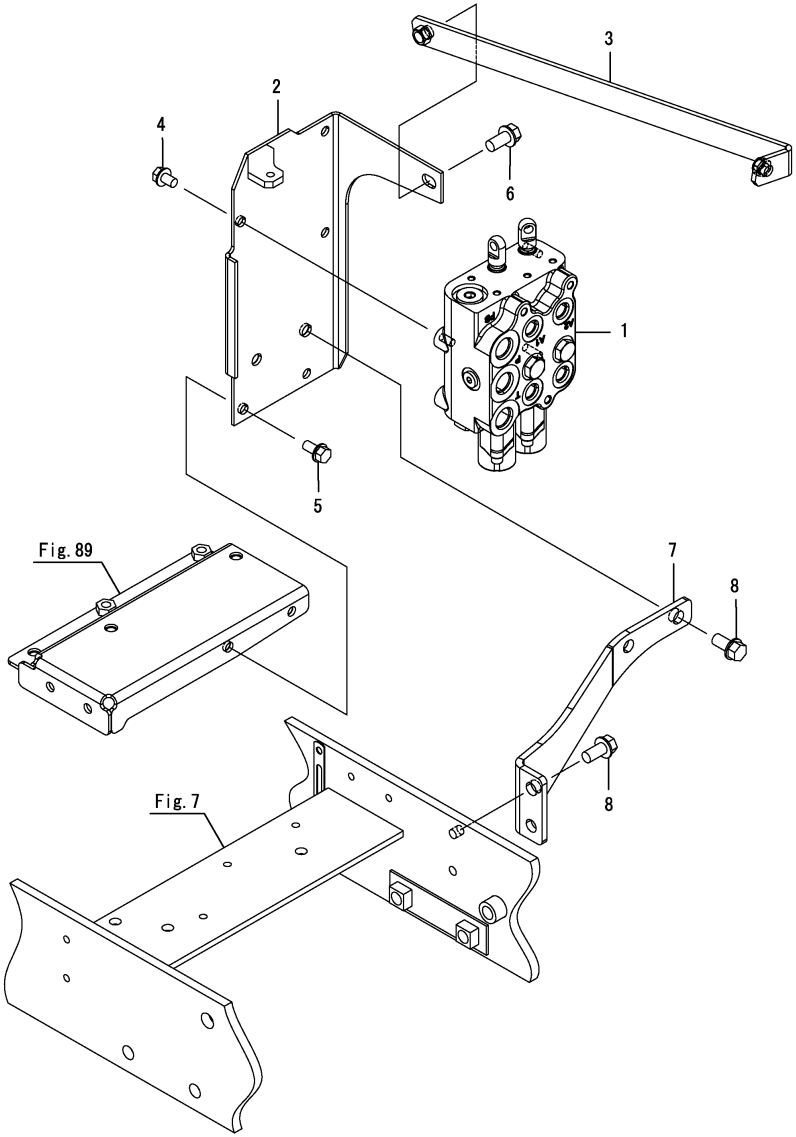

(A)=SC2400(CCY) (D)=
(B)= (E)=
(C)= (F)=

No.	Lev.	Parts No.	Description	Q'ty (A)	(B)	(C)	(D)	(E)	(F)	I	R
1	1	1A7880-47100	VALVE ASSY, LORDER	1							
2	1	1A7880-47120	STAY CMP SCV VALVE	1							
2-1	1	1A7880-47121	STAY ASSY, SCV VALVE	1						R	
	(A=F010134)										
3	1	1A7880-47770	PLATE ASSY, VALVE	1							
4	1	26106-080122	BOLT, M8X 12 PLATED	3							
5	1	26106-080162	BOLT, M8X 16 PLATED	2							
6	1	26106-100202	BOLT, M10X 20 PLATED	2							
7	1	1A7880-47850	PLATE,SUPPORT SCV	1							
7-1	1	1A7880-47851	PLATE, REINFORCEMENT	1						R	
	(A=F010300)										
8	1	26106-100202	BOLT, M10X 20 PLATED	4							

Remarks
*OPTIONAL PARTS
SCVKIT-SC2400
Fig.71,72,76,97 ARE INCORPORATED
IN THIS KIT.

N:Old $\overset{\text{Yes}}{\underset{\text{No}}{\leftrightarrow}}$ New, Q:Old $\overset{\text{No}}{\underset{\text{Yes}}{\leftrightarrow}}$ New, R:Old $\overset{\text{Yes}}{\underset{\text{Yes}}{\leftrightarrow}}$ New, S:Old $\overset{\text{No}}{\underset{\text{No}}{\leftrightarrow}}$ New, W:Add, Z:Discontinued, F:Interchangeable by set, K:Q'ty Change

Copyright (C) YANMAR CO., LTD. All RightsReserved.

Fig.72. LEVER,SCV

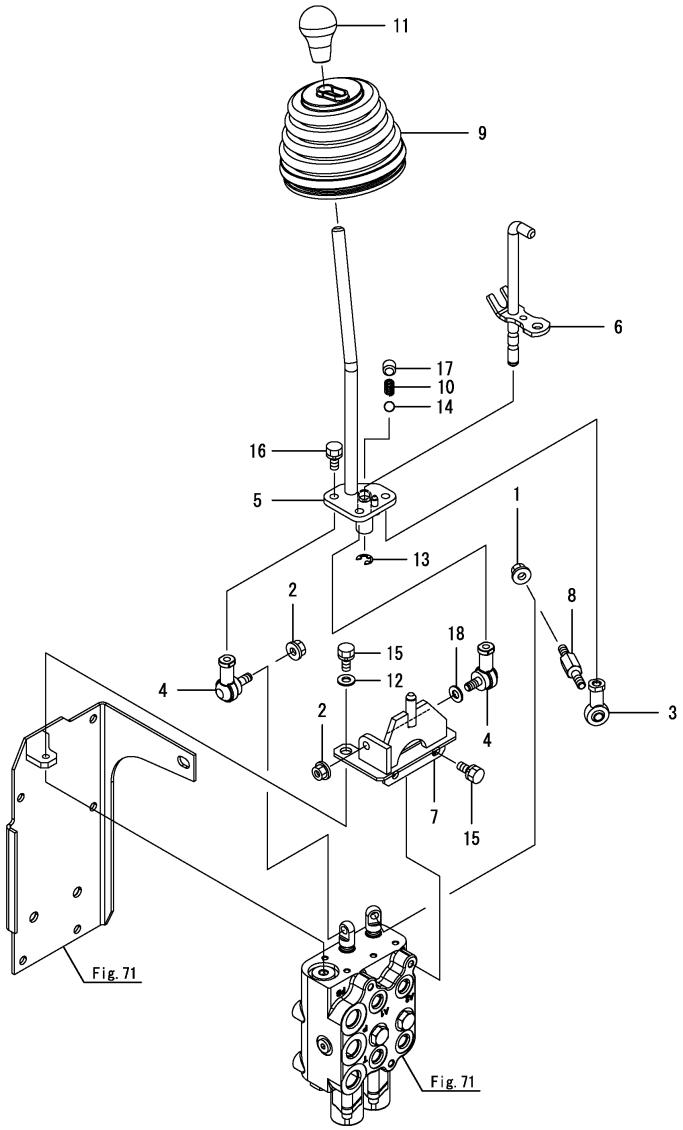

(A)=SC2400(CCY) (D)=
(B)= (E)=
(C)= (F)=

No.	Lev.	Parts No.	Description	Q'ty (A)	(B)	(C)	(D)	(E)	(F)	I	R
1	1	194990-22140	NUT, M8	1							
2	1	194990-22140	NUT, M8	2							
3	1	198164-27970	END, ROD 8R	1							
4	1	172122-46590	ELBOW	2							
5	1	1A7880-47600	LEVER ASSY, SCV	1							
6	1	1A7880-47650	PIN CMP,LOCK	1							
6-1	1	1A7880-47651	PIN ASSY, LOCK	1						R	
	(A=FZZZZZ)										
7	1	1A7880-47700	BKT CMP,SCV LEVER	1							
7-1	1	1A7880-47701	BRACKET ASSY, LEVER	1						N	
	(A=F003225)										
8	1	1A7880-47750	BOLT, LEVER	1							
9	1	1A7880-47950	BOOT, LEVER	1							
10	1	1E6150-56040	SPRING, FORK	1							
11	1	194990-85561	KNOB, HIGH/LOW	1							
12	1	22137-080000	WASHER, 8	1							
13	1	22272-000080	RING, E- 8	1							
14	1	24190-100003	BALL, STEEL 5/16	1							
15	1	26013-080162	BOLT, M8X 16	3							
16	1	26013-080162	BOLT, M8X 16	3							
17	1	26911-100102	SCREW, M10X10	1							
18	1	22137-080000	WASHER, 8	1							

Remarks
*OPTIONAL PARTS
SCVKIT-SC2400
Fig.71,72,76,97 ARE INCORPORATED
IN THIS KIT.

N:Old $\frac{\text{Yes}}{\text{No}}$ New, Q:Old $\frac{\text{No}}{\text{Yes}}$ New, R:Old $\frac{\text{Yes}}{\text{Yes}}$ New, S:Old $\frac{\text{No}}{\text{No}}$ New, W:Add, Z:Discontinued, F:Interchangeable by set, K:Q'ty Change

Copyright (C) YANMAR CO., LTD. All RightsReserved.

Fig.73. CONTROL, HYD

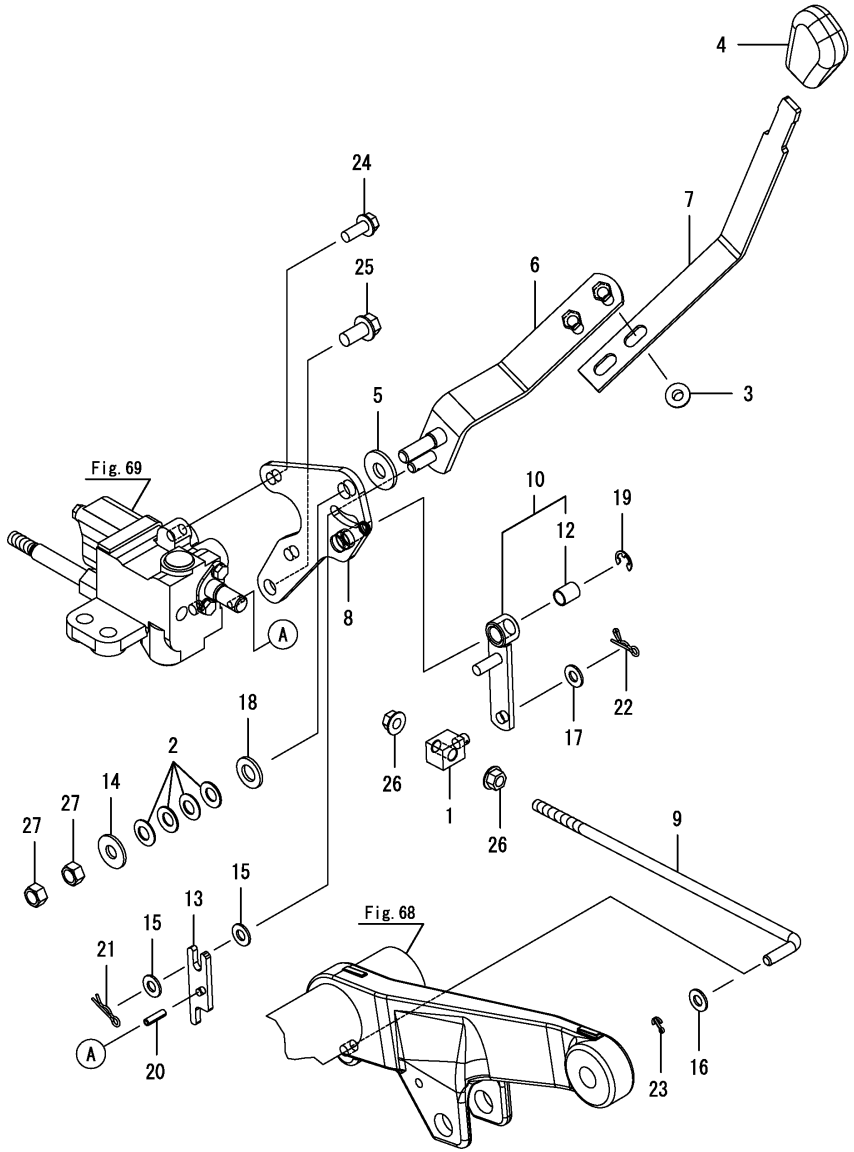

(A)=SC2400(CCY) (D)=
(B)= (E)=
(C)= (F)=

No.	Lev.	Parts No.	Description	Q'ty (A)	(B)	(C)	(D)	(E)	(F)	I	R
1	1	194208-47530	ADJUSTER	1							
2	1	194740-00160	SPRING, 10	4							
3	1	194990-22140	NUT, M8	2							
4	1	198200-47810	KNOB, BLACK	1							
5	1	1A6260-41250	PLATE, FRICTION	1							
6	1	1A7880-45000	LEVER ASSY, POSITION	1							
7	1	1A7880-45040	LEVER, POSITION	1							
8	1	1A7880-45210	STAY ASSY, LINK	1							
9	1	1A7880-45250	ROD, FEEDBACK	1							
10	1	1A7880-45330	LEVER ASSY, CONTROL	1							
10-1	1	1A7880-45331	LEVER ASSY, CONTROL	1						R	
	(A=FZZZZZ)										
12	2	24550-010150	BUSH, 10X15	1							
13	1	1A7070-47400	LEVER, SPOOL	1							
14	1	194145-61570	WASHER, 10	1							
15	1	22137-080000	WASHER, 8	2							
16	1	22137-080000	WASHER, 8	1							
17	1	22137-080000	WASHER, 8	1							
18	1	22137-120000	WASHER, 12	1							
19	1	22272-000080	RING, E- 8	1							
20	1	22351-050018	PIN, SPRING 5.0X18	1							
21	1	22372-080000	PIN, SNAP 8	1							
22	1	1C6281-52320	PIN, SNAP 8	1							
23	1	22417-200160	PIN, COTTER 2.0X16	1							
24	1	26106-080202	BOLT, M8X 20 PLATED	2							
24-1	1	26106-080162	BOLT, M8X 16 PLATED	2						N	
	(A=F000830)										
25	1	26106-100202	BOLT, M10X 20 PLATED	1							
26	1	26366-080002	NUT, M8	2							
27	1	26716-100002	NUT, M10	2							

N:Old $\overset{\text{Yes}}{\underset{\text{No}}{\leftrightarrows}}$ New, Q:Old $\overset{\text{No}}{\underset{\text{Yes}}{\leftrightarrows}}$ New, R:Old $\overset{\text{Yes}}{\underset{\text{Yes}}{\leftrightarrows}}$ New, S:Old $\overset{\text{No}}{\underset{\text{No}}{\leftrightarrows}}$ New, W:Add, Z:Discontinued, F:Interchangeable by set, K:Q'ty Change

Copyright (C) YANMAR CO., LTD. All RightsReserved.

Fig.74. HYDRAULIC PIPE

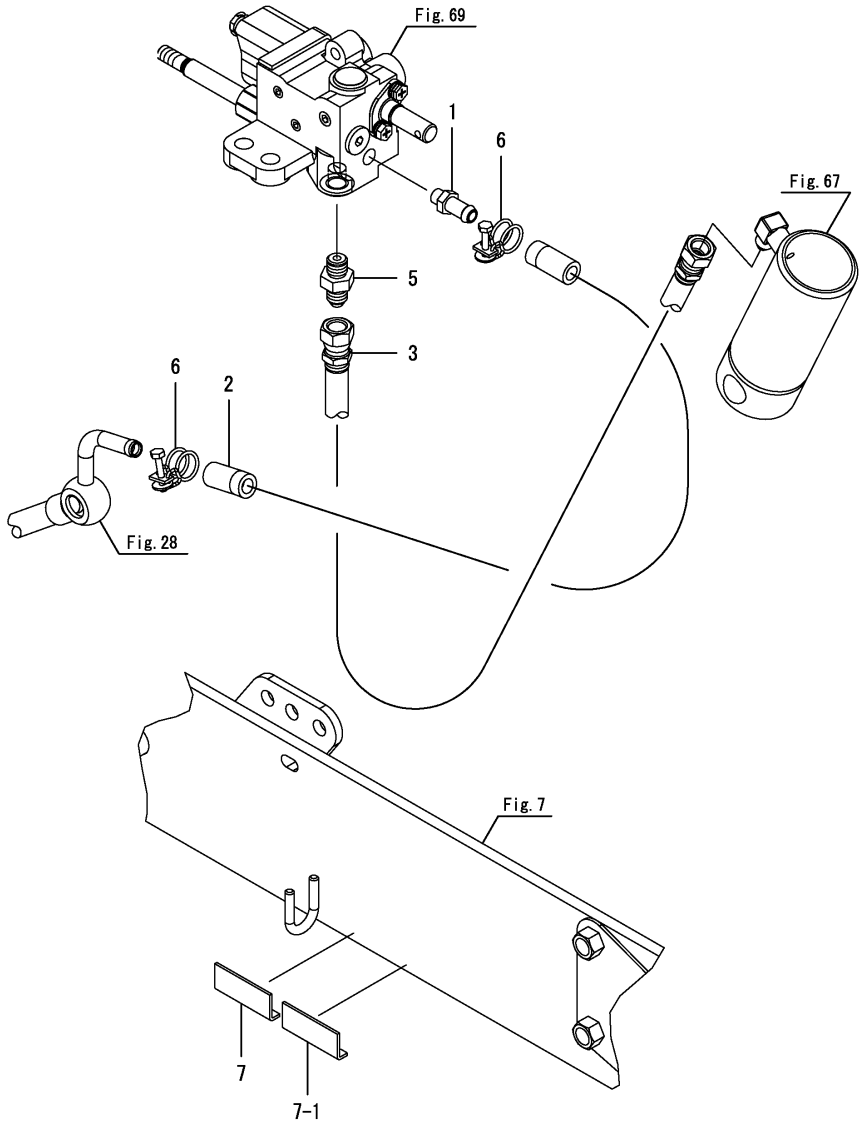

(A)=SC2400(CCY) (D)=
(B)= (E)=
(C)= (F)=

No.	Lev.	Parts No.	Description	Q'ty (A)	(B)	(C)	(D)	(E)	(F)	I	R
1	1	1A6380-25370	JOINT, R1/8	1							
2	1	1A7880-48100	HOSE, DRAIN LP	1							
2-1	1	1A7880-48101	HOSE, DRAIN LP	1						N	
	(A=F010101)										
3	1	1A7880-48160	HOSE, PRESSURE	1							
5	1	1E8450-66390	CONNECTOR, PF1/4	1							
6	1	23010-018000	CLAMP, 18	2							
7	1	198093-84810	SEAL, FENDER	1							
7-1	1	198093-84810	SEAL, FENDER	2						K	
	(A=F000830)										

N:Old $\xleftarrow[\text{No}]{\text{Yes}}$ New, Q:Old $\xleftarrow[\text{Yes}]{\text{No}}$ New, R:Old $\xleftarrow[\text{Yes}]{\text{Yes}}$ New, S:Old $\xleftarrow[\text{No}]{\text{No}}$ New, W:Add, Z:Discontinued, F:Interchangeable by set, K:Q'ty Change

Copyright (C) YANMAR CO., LTD. All RightsReserved.

Fig.75. OIL COOLER

(A)=SC2400(CCY) (D)=
(B)= (E)=
(C)= (F)=

No.	Lev.	Parts No.	Description	Q'ty (A)	(B)	(C)	(D)	(E)	(F)	I	R
1	1	194990-22140	NUT, M8	2							
2	1	1E8600-66700	COOLER, OIL	1							

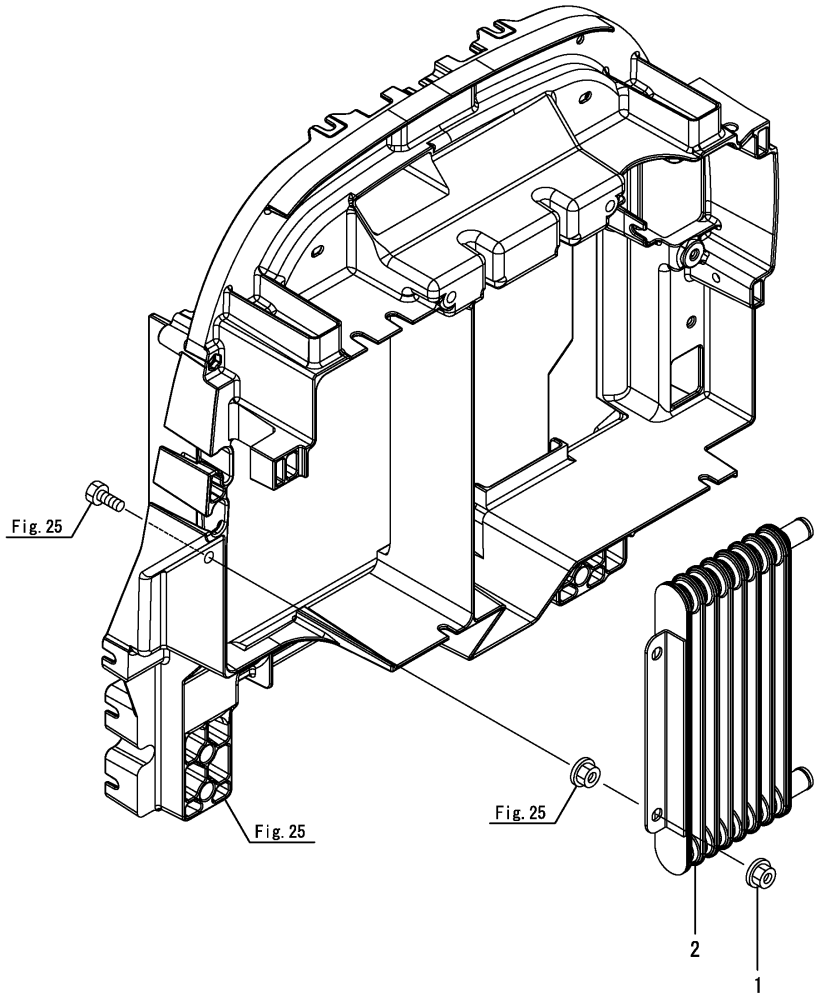

N:Old $\frac{\text{Yes}}{\text{No}}$ New, Q:Old $\frac{\text{No}}{\text{Yes}}$ New, R:Old $\frac{\text{Yes}}{\text{Yes}}$ New, S:Old $\frac{\text{No}}{\text{No}}$ New, W:Add, Z:Discontinued, F:Interchangeable by set, K:Q'ty Change

Copyright (C) YANMAR CO., LTD. All RightsReserved.

Fig.76. PIPING,SCV

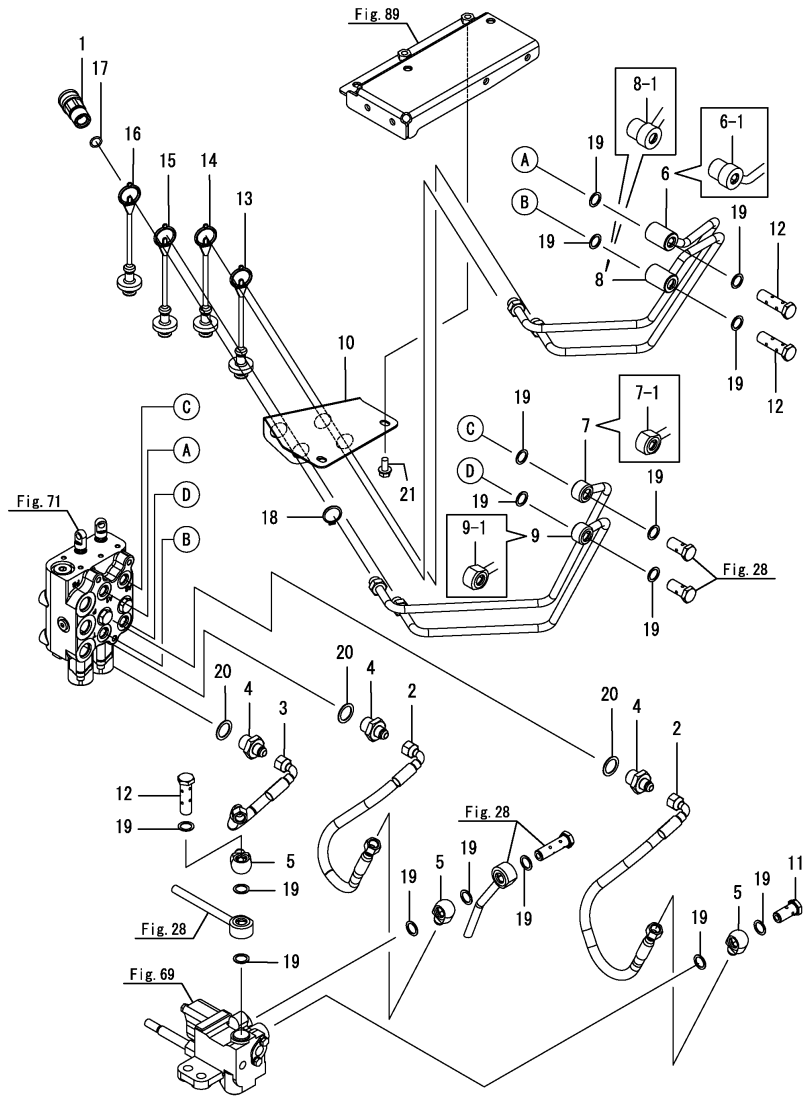

(A)=SC2400(CCY) (D)=
(B)= (E)=
(C)= (F)=

No.	Lev.	Parts No.	Description	Q'ty (A)	(B)	(C)	(D)	(E)	(F)	I	R
1	1	198223-46250	COUPLER, QUICK	4							
2	1	1A7880-47150	HOSE, PRESSURE	2							
3	1	1A7880-47200	HOSE, PRESSURE	1							
4	1	1A7880-47520	JOINT, 3/4UNF9/16UNF	3							
5	1	1A7880-47540	JOINT, 9/16UNF-14.5	3							
6	1	1A7880-47300	PIPE ASSY, PRESSURE	1							
6-1	1	1A7880-47301	PIPE ASSY, PRESSURE	1						S	
	(A=F003133)										
7	1	1A7880-47350	PIPE ASSY, PRESSURE	1							
7-1	1	1A7880-47351	PIPE ASSY, PRESSURE	1						S	
	(A=F003133)										
8	1	1A7880-47400	PIPE ASSY, PRESSURE	1							
8-1	1	1A7880-47401	PIPE ASSY, PRESSURE	1						S	
	(A=F003133)										
9	1	1A7880-47450	PIPE ASSY, PRESSURE	1							
9-1	1	1A7880-47451	PIPE ASSY, PRESSURE	1						S	
	(A=F003133)										
10	1	1A7880-47500	STAY(SCV COUPLER	1							
10-1	1	1A7880-47501	STAY, SCV COUPLER	1						R	
	(A=F010286)										
11	1	1A7880-47510	BOLT, JOINT 9/16UNF	1							
12	1	1A7880-47530	BOLT, JOINT 9/16UNF	3							
13	1	1A7880-47550	PLUG, DUST RED	1							
14	1	1A7880-47560	PLUG, DUST BLUE	1							
15	1	1A7880-47570	PLUG, DUST YELLOW	1							
16	1	1A7880-47580	PLUG, DUST GREEN	1							
17	1	194850-49290	PACKING, 6-1	4							
18	1	22242-000220	RING, 22	4							
19	1	23414-140000	GASKET, 14X1.0	16							
20	1	23414-190000	GASKET, 19X1.0	3							
21	1	26106-080162	BOLT, M8X 16 PLATED	2							

Remarks
*OPTIONAL PARTS
SCVKIT-SC2400
Fig.71,72,76,97 ARE INCORPORATED
IN THIS KIT.

N:Old $\frac{\text{Yes}}{\text{No}}$ New, Q:Old $\frac{\text{No}}{\text{Yes}}$ New, R:Old $\frac{\text{Yes}}{\text{Yes}}$ New, S:Old $\frac{\text{No}}{\text{No}}$ New, W:Add, Z:Discontinued, F:Interchangeable by set, K:Q'ty Change

Copyright (C) YANMAR CO., LTD. All RightsReserved.

Fig.77. WIRE HARNESS

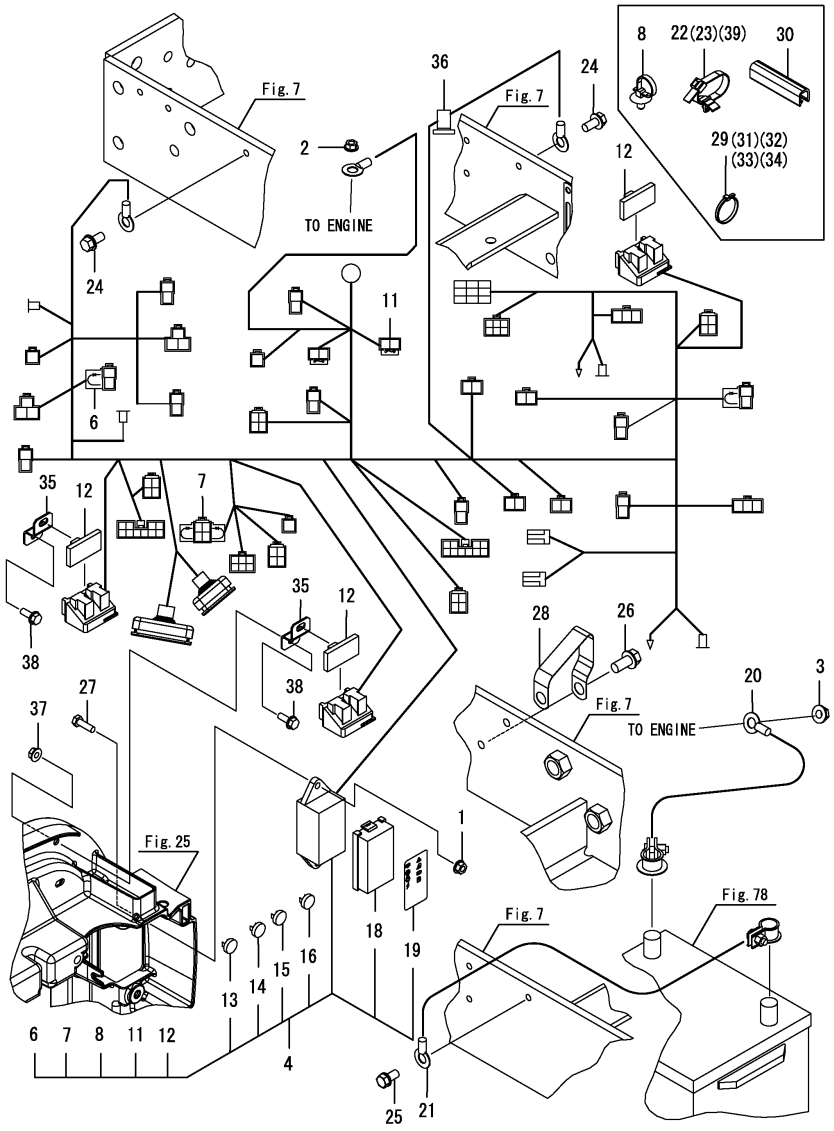

(A)=SC2400(CCY) (D)=
(B)= (E)=
(C)= (F)=

No.	Lev.	Parts No.	Description	Q'ty (A)	(B)	(C)	(D)	(E)	(F)	I	R
1	1	194990-22130	NUT, M6	2							
2	1	194990-22130	NUT, M6	1							
3	1	194990-22140	NUT, M8	1							
4	1	1A7880-51101	HARNESS ASSY,WIRE	1							
4-1	1	1A7880-51102	HARNESS ASSY, WIRE	1						N	
	(A=F001699)										
4-2	1	1A7880-51103	HARNESS ASSY, WIRE	1						N	
	(A=F010101)										
6	2	1A7500-51130	DIODE, 3.0A	3							
7	2	1A8160-51130	DIODE, 3.0AX2	3							
8	2	1A7500-51160	CLIP, HARNESS	23							
11	2	1A6240-51630	FUSE, SLOW BLOW 60A	2							
12	2	1A7880-51730	CLIP	3							
13	2	198535-52110	FUSE, 5A	4							
14	2	198535-52120	FUSE, 10A	3							
15	2	198535-52130	FUSE, 15A	3							
16	2	1A7450-52180	FUSE, 25A	2							
18	2	1A7531-52420	COVER, FUSE BOX	1							
19	2	1A7880-65780	LABEL,FUSE	1							
20	1	1A6780-51410	CABLE, BATTERY	1							
21	1	1A7880-51420	CABLE, BATTERY EARTH	1							
22	1	194680-51670	BAND, CLIP	1							
23	1	194680-51670	BAND, CLIP	1							
24	1	26106-080162	BOLT, M8X 16 PLATED	2							
25	1	26106-080162	BOLT, M8X 16 PLATED	1							
26	1	26106-100202	BOLT, M10X 20 PLATED	1							
27	1	26116-060202	BOLT, M6X 20 PLATED	2							
28	1	933171-15801	CORD, ENGINE EARTH	1							
29	1	1A1380-55310	CLAMP, WIRE	1							
30	1	1A7880-10410	TRIM, 9.5tX70	1						Z	
	(A=FXXXXX)										
31	1	29622-140001	BAND, RF140	1						Z	
	(A=FXXXXX)										
32	1	29622-250001	BAND, RF250	1							
32-1	1	1A8300-51210	BAND, REPEAT	1						R	
	(A=FXXXXX)										
33	1	29622-250001	BAND, RF250	1							
33-1	1	1A8300-51210	BAND, REPEAT	1						R	
	(A=FXXXXX)										
34	1	29622-250001	BAND, RF250	1							
34-1	1	29622-140001	BAND, RF140	1						R	
	(A=FXXXXX)										
34-2	1	1A8300-51210	BAND, REPEAT	1						R	
	(A=FXXXXX)										
35	1	1A7880-51800	STAY, RELAY	2						Z	
	(A=F001099)										
36	1	194680-78350	STICKER, WIRE 18	1							
37	1	194990-22130	NUT, M6	2						Z	
	(A=F001099)										
38	1	26106-060162	BOLT, M6X 16 PLATED	2						Z	
	(A=F001099)										

Remarks
*Serial No.
Up to F020100 refer to this item.
From F020101 refer to Fig.115.

N:Old $\xleftrightarrow[\text{No}]{\text{Yes}}$ New, Q:Old $\xleftrightarrow[\text{Yes}]{\text{No}}$ New, R:Old $\xleftrightarrow[\text{Yes}]{\text{Yes}}$ New, S:Old $\xleftrightarrow[\text{No}]{\text{No}}$ New, W:Add, Z:Discontinued, F:Interchangeable by set, K:Q'ty Change

++ CONTINUE ++

Copyright (C) YANMAR CO., LTD. All RightsReserved.

Fig.77. WIRE HARNESS

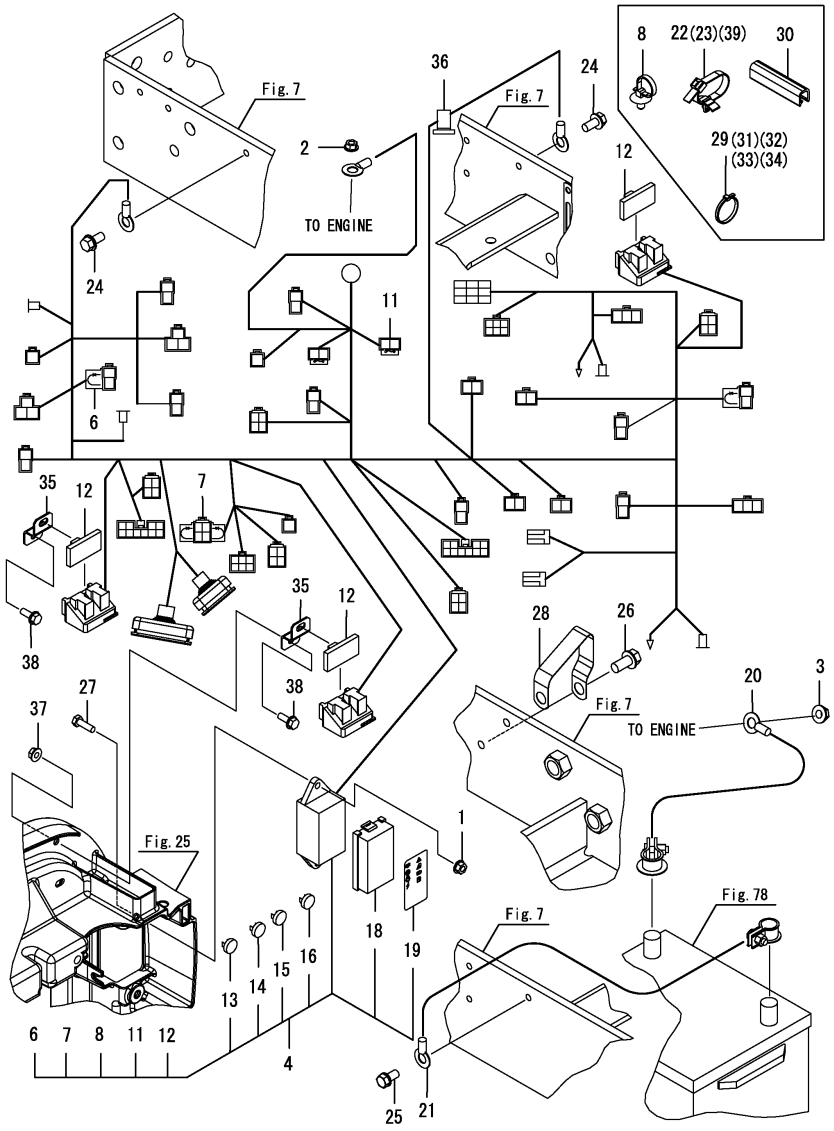

(A)=SC2400(CCY) (D)=
(B)= (E)=
(C)= (F)=

No.	Lev.	Parts No.	Description	Q'ty (A)	(B)	(C)	(D)	(E)	(F)	I	R
39	1 (A=F001814)	194680-51670	BAND, CLIP	1						W	

Remarks
*Serial No.
Up to F020100 refer to this item.
From F020101 refer to Fig.115.

N:Old ←Yes/No→ New, Q:Old ←No/Yes→ New, R:Old ←Yes/Yes→ New, S:Old ←No/No→ New, W:Add, Z:Discontinued, F:Interchangeable by set, K:Q'ty Change

Copyright (C) YANMAR CO., LTD. All RightsReserved.

Fig.115. (77A)WIRE HARNESS

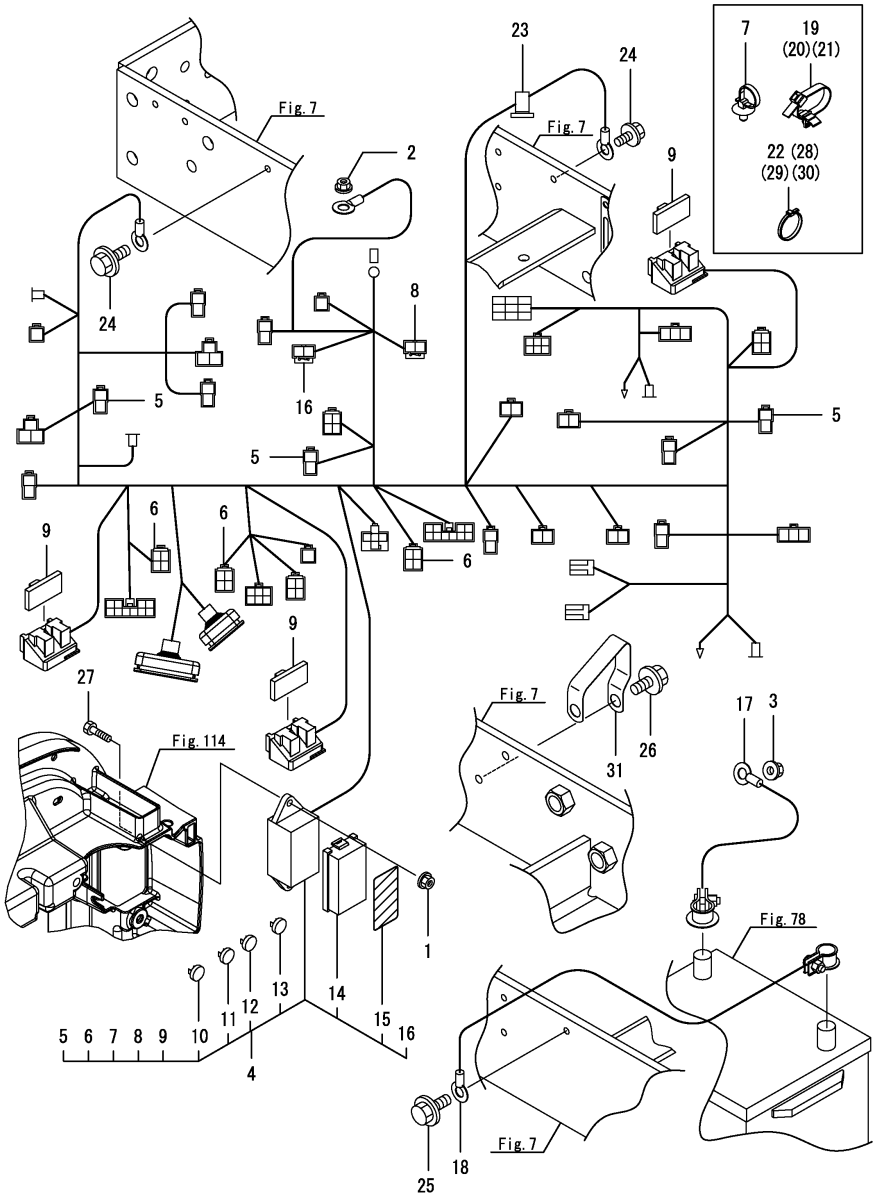

(A)=SC2400(CCY) (D)=
(B)= (E)=
(C)= (F)=

No.	Lev.	Parts No.	Description	Q'ty (A)	(B)	(C)	(D)	(E)	(F)	I	R
1	1	194990-22130	NUT, M6	2							
2	1	194990-22130	NUT, M6	1							
3	1	194990-22140	NUT, M8	1							
4	1	1A7882-51101	HARNESS ASSY,WIRE	1							
5	2	1A7500-51130	DIODE, 3.0A	3							
6	2	1A8160-51130	DIODE, 3.0AX2	3							
7	2	1A7500-51160	CLIP, HARNESS	23							
8	2	1A6240-51630	FUSE, SLOW BLOW 60A	1							
9	2	1A7880-51730	CLIP	3							
10	2	198535-52110	FUSE, 5A	4							
11	2	198535-52120	FUSE, 10A	3							
12	2	198535-52130	FUSE, 15A	3							
13	2	1A7450-52180	FUSE, 25A	2							
14	2	1A7531-52420	COVER, FUSE BOX	1							
15	2	1A7880-65780	LABEL,FUSE	1							
16	2	198153-51700	FUSE, SLOW BLOW 80A	1							
17	1	1A6780-51410	CABLE, BATTERY	1							
18	1	1A7880-51420	CABLE, BATTERY EARTH	1							
19	1	194680-51670	BAND, CLIP	1							
20	1	194680-51670	BAND, CLIP	1							
21	1	194680-51670	BAND, CLIP	1							
22	1	1A1380-55310	CLAMP, WIRE	1							
23	1	194680-78350	STICKER, WIRE 18	1							
24	1	26106-080162	BOLT, M8X 16 PLATED	2							
25	1	26106-080162	BOLT, M8X 16 PLATED	1							
26	1	26106-100202	BOLT, M10X 20 PLATED	1							
27	1	26116-060202	BOLT, M6X 20 PLATED	2							
28	1	1A8300-51210	BAND, REPEAT	1							
29	1	1A8300-51210	BAND, REPEAT	1							
30	1	1A8300-51210	BAND, REPEAT	1							
31	1	933171-15801	CORD, ENGINE EARTH	1							

Remarks
*Serial No.
Up to F020100 refer to Fig.77.
From F020101 refer to this item.

N:Old $\overset{\text{Yes}}{\underset{\text{No}}{\leftrightarrows}}$ New, Q:Old $\overset{\text{No}}{\underset{\text{Yes}}{\leftrightarrows}}$ New, R:Old $\overset{\text{Yes}}{\underset{\text{Yes}}{\leftrightarrows}}$ New, S:Old $\overset{\text{No}}{\underset{\text{No}}{\leftrightarrows}}$ New, W:Add, Z:Discontinued, F:Interchangeable by set, K:Q'ty Change

Copyright (C) YANMAR CO., LTD. All RightsReserved.

Fig.78. BATTERY

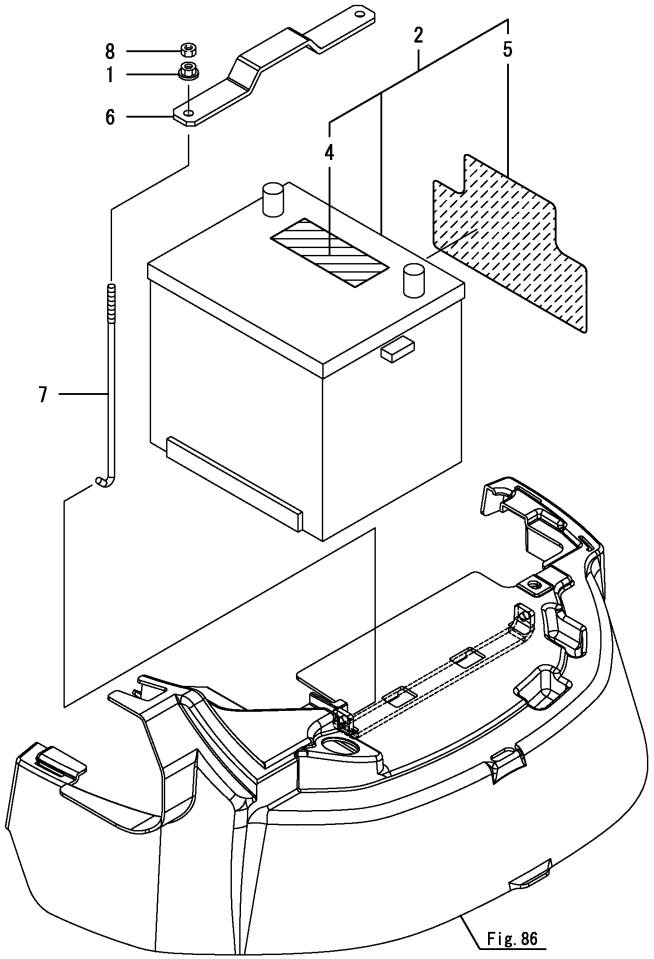

(A)=SC2400(CCY) (D)=
(B)= (E)=
(C)= (F)=

No.	Lev.	Parts No.	Description	Q'ty (A)	(B)	(C)	(D)	(E)	(F)	I	R
1	1	194990-22130	NUT, M6	2							
2	1	1A8160-51550	BATTERY ASSY,DRY526R	1							
4	2	1A8160-51570	LABEL, BATTERY	1							
5	2	1A8160-51580	LABEL, BATTERY	1							
6	1	1A7880-58110	CLAMP, BATTERY	1							
6-1	1	1A7880-58111	CLAMP, BATTERY	1						N	
	(A=F001935)										
7	1	1A7880-58120	ROD, CLAMP	2							
7-1	1	1A7880-58121	ROD, BATTERY CLAMP	2						R	
	(A=F003324)										
8	1	26716-060002	NUT, M6	2							

N:Old $\xleftarrow[\text{No}]{\text{Yes}}$ New, Q:Old $\xleftarrow[\text{Yes}]{\text{No}}$ New, R:Old $\xleftarrow[\text{Yes}]{\text{Yes}}$ New, S:Old $\xleftarrow[\text{No}]{\text{No}}$ New, W:Add, Z:Discontinued, F:Interchangeable by set, K:Q'ty Change

Copyright (C) YANMAR CO., LTD. All RightsReserved.

Fig.79. SWITCH A

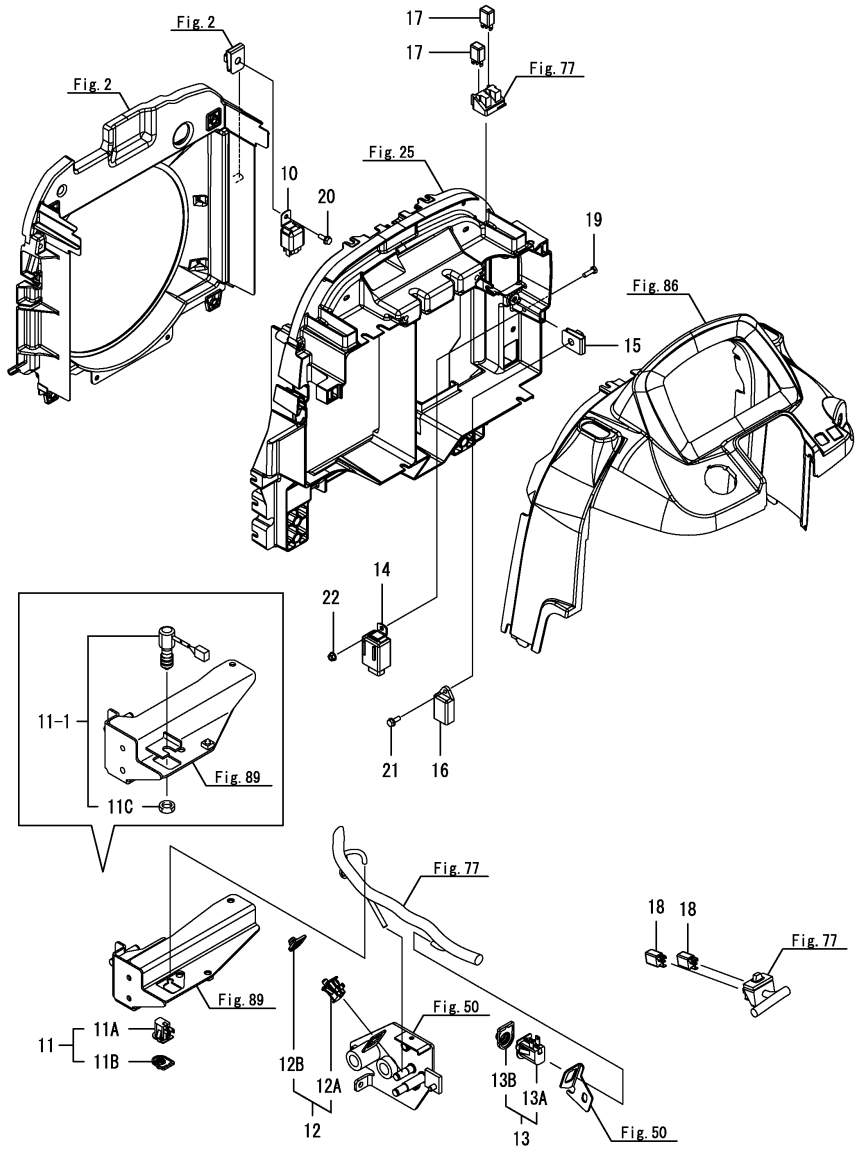

(A)=SC2400(CCY) (D)=
(B)= (E)=
(C)= (F)=

No.	Lev.	Parts No.	Description	Q'ty (A)	(B)	(C)	(D)	(E)	(F)	I	R
10	1	198220-52180	RELAY, STARTER	1							
11	1	1A7880-52200	SWITCH ASSY, PEDAL	1							
11-1	1	198223-52150	SWITCH, STOP LAMP	1						N	
	(A=F010101)										
11A	2	1A7880-52210	SWITCH, PEDAL NC	1						Z	
	(A=F010101)										
11B	2	1A8160-52330	COVER, GUARD	1						Z	
	(A=F010101)										
11C	2	26776-120002	NUT, LOCK M12	1						W	
	(A=F010101)										
12	1	1A7880-52200	SWITCH ASSY, PEDAL	1							
12A	2	1A7880-52210	SWITCH, PEDAL NC	1							
12B	2	1A8160-52330	COVER, GUARD	1							
13	1	1A8160-52300	SWITCH, SEAT DELTA	1							
13A	2	1A8160-52310	SWITCH, SEAT DELTA	1							
13B	2	1A8160-52330	COVER, GUARD	1							
14	1	1A6780-57200	FLASHER	1							
15	1	198071-61890	NUT, SPEED M6	1							
16	1	129211-77920	TIMER	1							
17	1	1K1140-82500	RELAY(ACM13211M01	4							
18	1	1K1140-82500	RELAY(ACM13211M01	2							
19	1	26116-060202	BOLT, M6X 20 PLATED	1							
19-1	1	26106-060162	BOLT, M6X 16 PLATED	1						S	
	(A=F001099)										
20	1	26106-060162	BOLT, M6X 16 PLATED	1							
21	1	26106-060162	BOLT, M6X 16 PLATED	1							
22	1	194990-22130	NUT, M6	1							

Remarks
*Serial No.
Up to F020100 refer to this item.
From F020101 refer to Fig.116.

N:Old $\xleftarrow[\text{No}]{\text{Yes}}$ New, Q:Old $\xleftarrow[\text{Yes}]{\text{No}}$ New, R:Old $\xleftarrow[\text{Yes}]{\text{Yes}}$ New, S:Old $\xleftarrow[\text{No}]{\text{No}}$ New, W:Add, Z:Discontinued, F:Interchangeable by set, K:Q'ty Change

Copyright (C) YANMAR CO., LTD. All RightsReserved.

Fig.116. (79A)SWITCH A

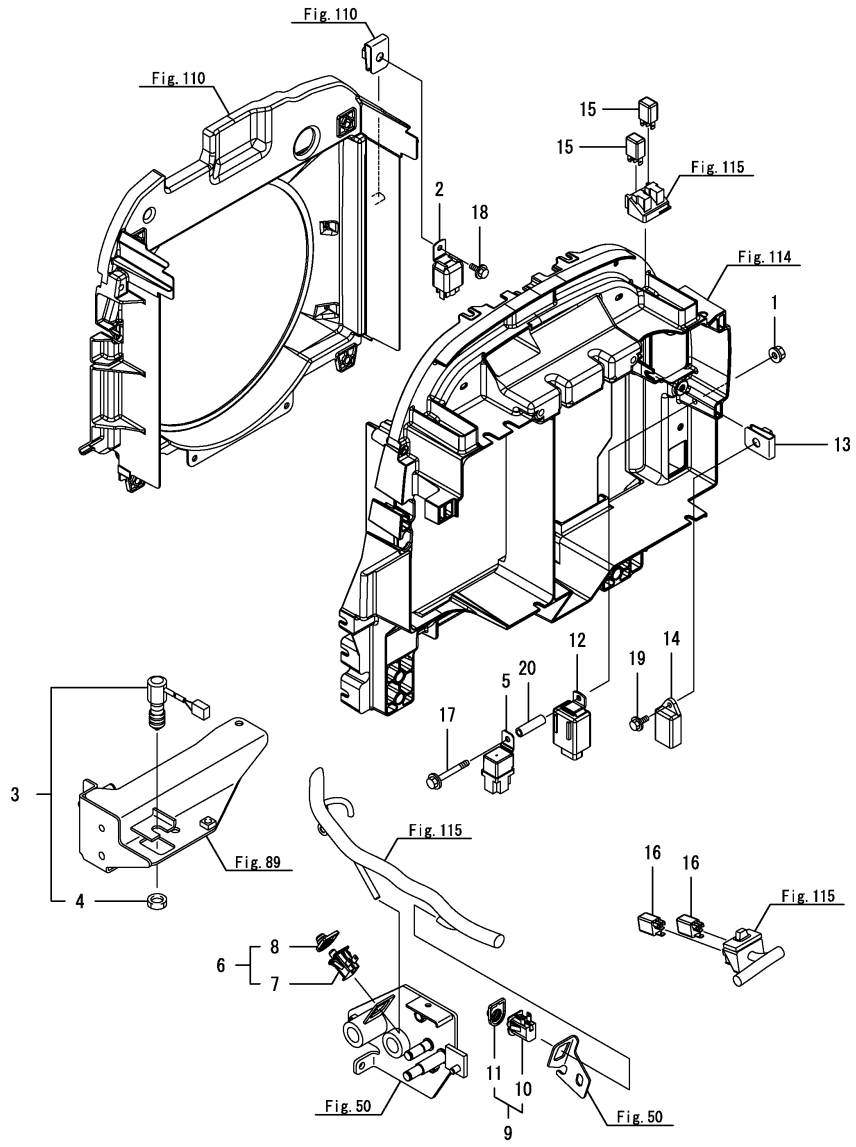

(A)=SC2400(CCY) (D)=
(B)= (E)=
(C)= (F)=

No.	Lev.	Parts No.	Description	Q'ty (A)	(B)	(C)	(D)	(E)	(F)	I	R
1	1	194990-22130	NUT, M6	1							
2	1	198220-52180	RELAY, STARTER	1							
3	1	198223-52150	SWITCH, STOP LAMP	1							
4	2	26776-120002	NUT, LOCK M12	1							
5	1	1A7870-52950	RELAY, CB	1							
6	1	1A7880-52200	SWITCH ASSY, PEDAL	1							
7	2	1A7880-52210	SWITCH, PEDAL NC	1							
8	2	1A8160-52330	COVER, GUARD	1							
9	1	1A8160-52300	SWITCH, SEAT DELTA	1							
10	2	1A8160-52310	SWITCH, SEAT DELTA	1							
11	2	1A8160-52330	COVER, GUARD	1							
12	1	1A6780-57200	FLASHER	1							
13	1	198071-61890	NUT, SPEED M6	1							
14	1	129211-77920	TIMER	1							
15	1	1K1140-82500	RELAY(ACM13211M01	4							
16	1	1K1140-82500	RELAY(ACM13211M01	2							
17	1	26106-060502	BOLT, M6X 50 PLATED	1							
18	1	26106-060162	BOLT, M6X 16 PLATED	1							
19	1	26106-060162	BOLT, M6X 16 PLATED	1							
20	1	1A6382-96650	COLLAR	1							

Remarks
*Serial No.
Up to F020100 refer to Fig.79.
From F020101 refer to this item.

N:Old $\xleftarrow[\text{No}]{\text{Yes}}$ New, Q:Old $\xleftarrow[\text{Yes}]{\text{No}}$ New, R:Old $\xleftarrow[\text{Yes}]{\text{Yes}}$ New, S:Old $\xleftarrow[\text{No}]{\text{No}}$ New, W:Add, Z:Discontinued, F:Interchangeable by set, K:Q'ty Change

Copyright (C) YANMAR CO., LTD. All RightsReserved.

Fig.80. SWITCH B

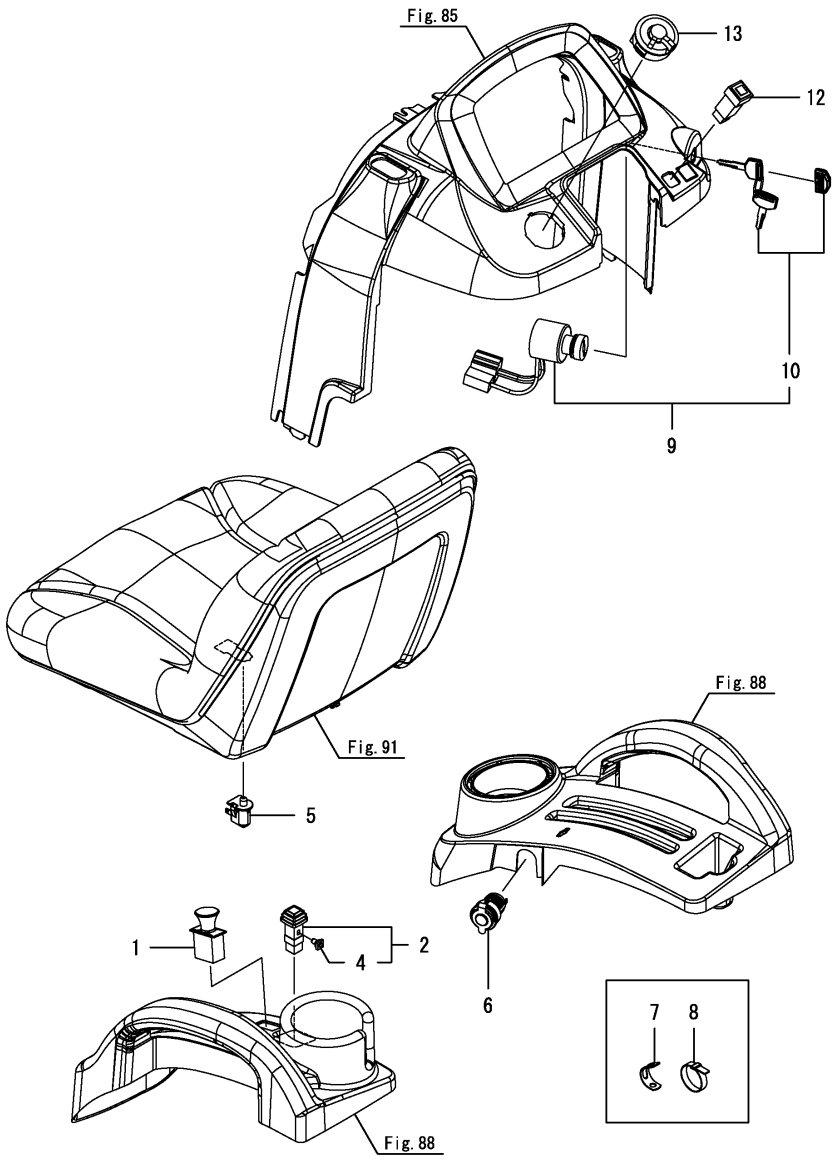

(A)=SC2400(CCY) (D)=
(B)= (E)=
(C)= (F)=

No.	Lev.	Parts No.	Description	Q'ty (A)	(B)	(C)	(D)	(E)	(F)	I	R
1	1	172531-17300	SWITCH, PTO	1							
2	1	1A7880-52250	SWITCH, NL Y	1							
4	2	198133-78840	LAMP ASSY	1							
5	1	1A8160-52310	SWITCH, SEAT DELTA	1							
6	1	1A7880-57100	SOCKET, POWER SOUCE	1							
7	1	194440-51620	CLAMP	1							
8	1	29622-140001	BAND, RF140	2							
8-1	1	1A8300-51210	BAND, REPEAT	2						R	
	(A=FXXXXX)										
9	1	1A7880-52110	SWITCH ASSY, STARTER	1							
10	2	1A7880-52100	KEY ASSY	1							
12	1	1A7335-52120	SWITCH, HAZARD	1							
13	1	1A7880-52140	SWITCH, COMBINATION	1							

N:Old $\frac{\text{Yes}}{\text{No}}$ New, Q:Old $\frac{\text{No}}{\text{Yes}}$ New, R:Old $\frac{\text{Yes}}{\text{Yes}}$ New, S:Old $\frac{\text{No}}{\text{No}}$ New, W:Add, Z:Discontinued, F:Interchangeable by set, K:Q'ty Change

Copyright (C) YANMAR CO., LTD. All RightsReserved.

Fig.81. LAMP

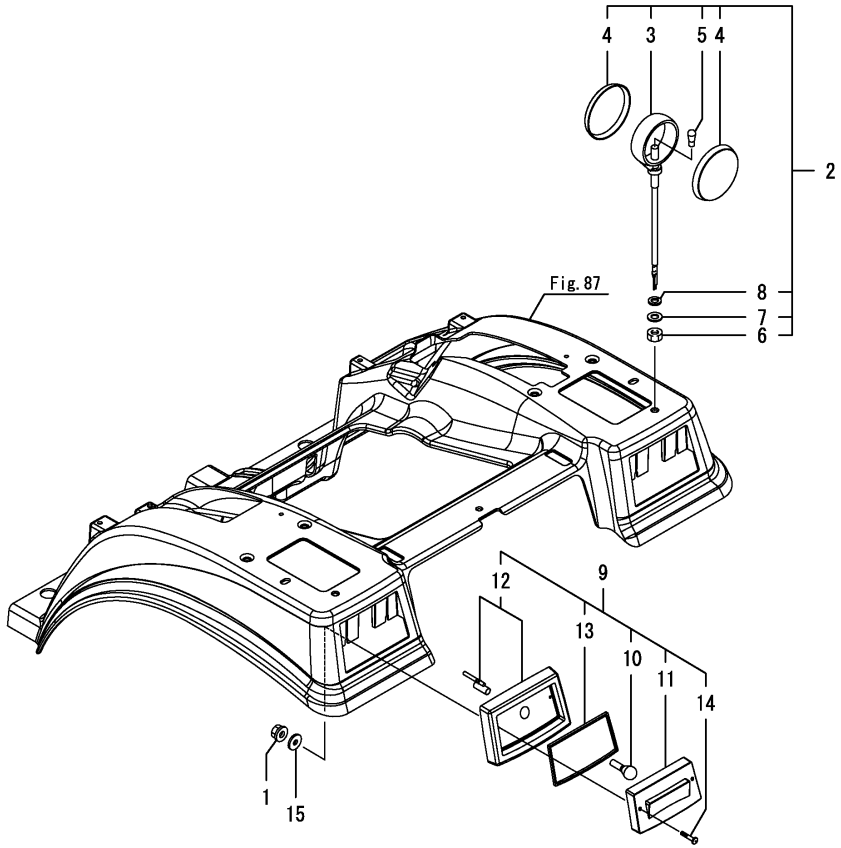

(A)=SC2400(CCY) (D)=
(B)= (E)=
(C)= (F)=

No.	Lev.	Parts No.	Description	Q'ty (A)	(B)	(C)	(D)	(E)	(F)	I	R
1	1	194990-22130	NUT, M6	4							
2	1	1A7880-53400	LAMP ASSY, FLASHER	2							
3	2	1A7880-53410	HOUSING	2							
4	2	1A7880-53420	LENS	4							
5	2	1A7880-53430	BULB, 12.8V/27W	2							
6	2	21731-040002	NUT	2							
6-1	2	1A7880-53100	NUT	2						R	
	(A=FXXXXX)										
7	2	22137-130000	WASHER, 13	2							
8	2	22217-130000	WASHER, SPRING 1/2	2							
9	1	1A7335-53600	LAMP, TAIL	2							
10	2	1A7335-53610	BULB, 12V-21/5W	2							
11	2	1A7335-53620	LENS ASSY	2							
12	2	1A7335-53630	HOUSING ASSY, SEMI	2							
13	2	1A7335-53640	GASKET	2							
14	2	1A7335-53650	SCREW, TAPPING M6X32	4							
15	1	22157-060000	WASHER, 6	4							

N:Old $\xleftarrow[\text{No}]{\text{Yes}}$ New, Q:Old $\xleftarrow[\text{Yes}]{\text{No}}$ New, R:Old $\xleftarrow[\text{Yes}]{\text{Yes}}$ New, S:Old $\xleftarrow[\text{No}]{\text{No}}$ New, W:Add, Z:Discontinued, F:Interchangeable by set, K:Q'ty Change

Copyright (C) YANMAR CO., LTD. All RightsReserved.

Fig.82. SIDE LAMP

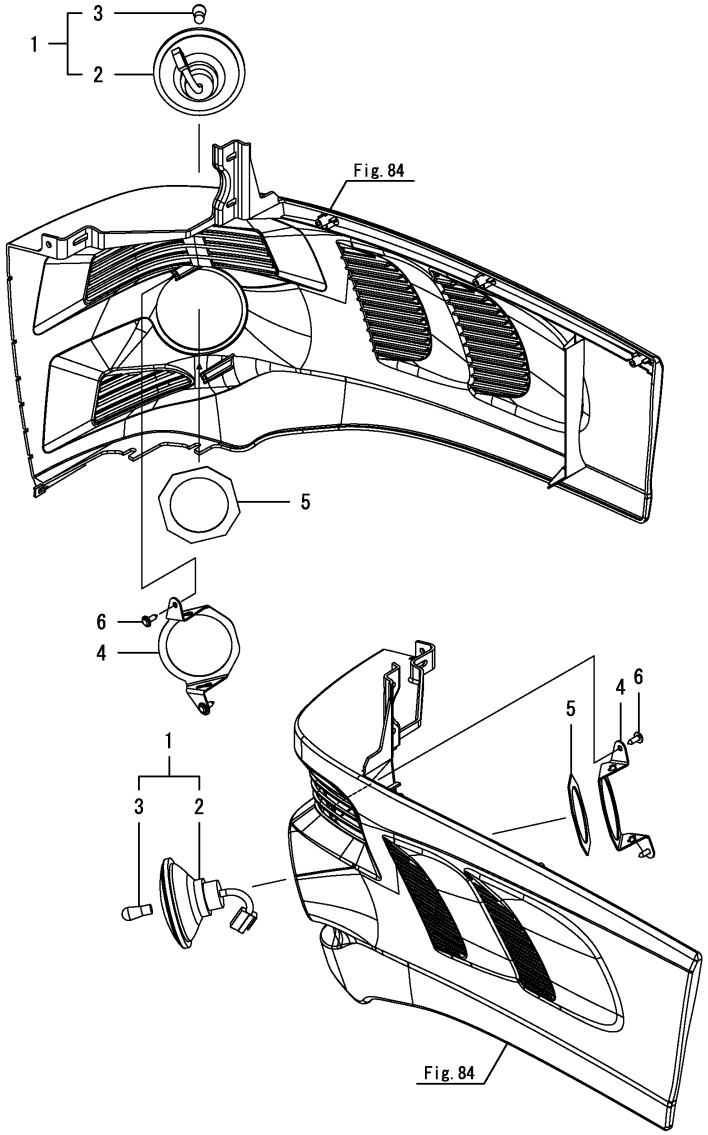

(A)=SC2400(CCY) (D)=
(B)= (E)=
(C)= (F)=

No.	Lev.	Parts No.	Description	Q'ty (A)	(B)	(C)	(D)	(E)	(F)	I	R
1	1	1A7880-53300	LAMP ASSY, SIDE	2							
2	2	1A7880-53310	CASE ASSY, SIDE LAMP	2							
3	2	1A7880-53320	BULB, 12V/15W	2							
4	1	1A7880-61060	STAY,LAMP	2							
4-1	1	1A7880-61061	STAY, LAMP	2						R	
	(A=F003283)										
5	1	1A7880-61070	RUBBER, LAMP	2							
6	1	194420-61640	SCREW, TAPPING M5X16	4							

N:Old $\xleftrightarrow[\text{No}]{\text{Yes}}$ New, Q:Old $\xleftrightarrow[\text{Yes}]{\text{No}}$ New, R:Old $\xleftrightarrow[\text{Yes}]{\text{Yes}}$ New, S:Old $\xleftrightarrow[\text{No}]{\text{No}}$ New, W:Add, Z:Discontinued, F:Interchangeable by set, K:Q'ty Change

Copyright (C) YANMAR CO., LTD. All RightsReserved.

Fig.83. METER

(A)=SC2400(CCY) (D)=
(B)= (E)=
(C)= (F)=

No.	Lev.	Parts No.	Description	Q'ty (A)	(B)	(C)	(D)	(E)	(F)	I	R
1	1	1A7880-56010	METER ASSY	1							
2	2	1A7510-56110	BULB, 12V2.0W	12							
3	2	198448-56150	BULB, 14V-1.4W	2							
4	1	22857-600160	SCREW, 6X16	4							

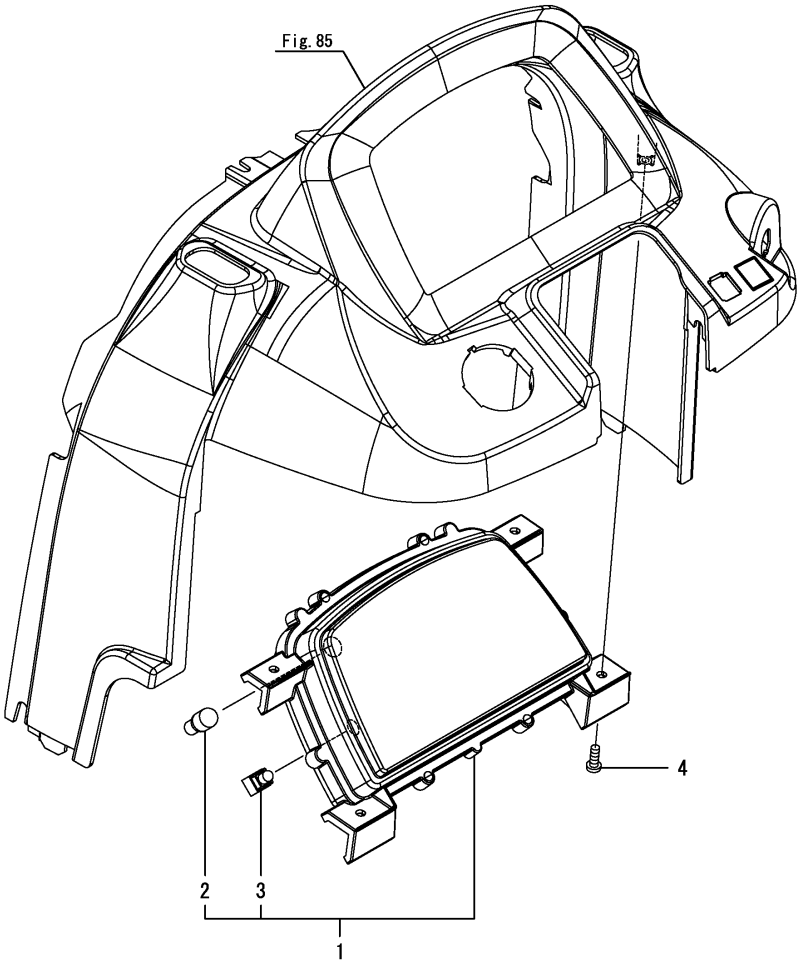

N:Old $\xleftrightarrow[\text{No}]{\text{Yes}}$ New, Q:Old $\xleftrightarrow[\text{Yes}]{\text{No}}$ New, R:Old $\xleftrightarrow[\text{Yes}]{\text{Yes}}$ New, S:Old $\xleftrightarrow[\text{No}]{\text{No}}$ New, W:Add, Z:Discontinued, F:Interchangeable by set, K:Q'ty Change

Copyright (C) YANMAR CO., LTD. All RightsReserved.

Fig.84. HOOD

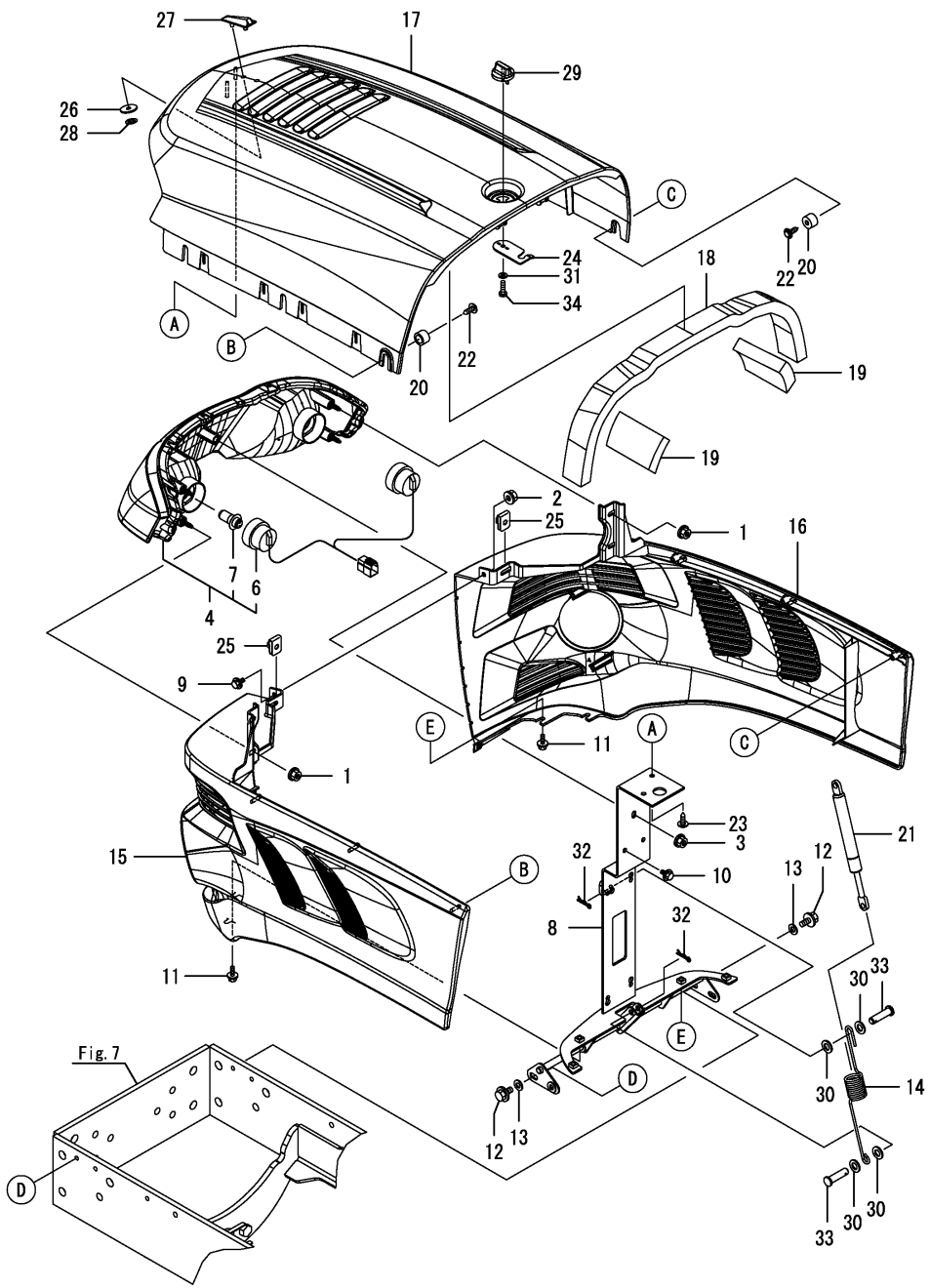

(A)=SC2400(CCY) (D)=
(B)= (E)=
(C)= (F)=

No.	Lev.	Parts No.	Description	Q'ty (A)	(B)	(C)	(D)	(E)	(F)	I	R
1	1	194990-22130	NUT, M6	4							
2	1	194990-22130	NUT, M6	1							
3	1	194990-22130	NUT, M6	1							
4	1	1A7880-53050	LAMP ASSY, HEAD	1							
6	2	1A7880-53070	WIRE, HEAD LAMP	1							
7	2	1A7880-53080	BULB, 12V30/30W	2							
8	1	1A7880-60900	HINGE ASSY, BONNET	1							
8-1	1	1A7880-60901	HINGE ASSY, BONNET	1							R
	(A=F003283)										
9	1	26106-060122	BOLT, M6X 12 PLATED	1							
9-1	1	26106-060162	BOLT, M6X 16 PLATED	1							R
	(A=FXXXXX)										
10	1	26106-060162	BOLT, M6X 16 PLATED	2							
11	1	26106-060162	BOLT, M6X 16 PLATED	4							
12	1	26106-080162	BOLT, M8X 16 PLATED	4							
13	1	22137-080000	WASHER, 8	4							
14	1	1A7880-60990	SPRING, HINGE	1							
15	1	1A7880-61020	BONNET, LOWER L	1							
16	1	1A7880-61030	BONNET, LOWER R	1							
17	1	1A7880-61110	HOOD,UPPER	1							
17-1	1	1A7880-61111	BONNET, UPPER	1							N
	(A=F010165)										
18	1	1A7880-61170	SEAL, BONNET UPPER	1							
19	1	1A7880-61260	CUSHION, BONNET	2							
20	1	1A8070-61330	COLLAR, 10X15X10	6							
21	1	1A7880-61370	SPRING, GAS	1							
22	1	194420-61640	SCREW, TAPPING M5X16	6							
23	1	194420-61640	SCREW, TAPPING M5X16	2							
24	1	1A7880-61760	STOPPER(HOOD	1							
24-1	1	1A7880-61761	STOPPER, BONNET	1							R
	(A=F010315)										
25	1	198071-61890	NUT, SPEED M6	2							
26	1	194555-65130	CUSHION	2							
27	1	194940-65590	MARK,TOP	1							
28	1	198071-65610	NUT, SPEED M5	2							
29	1	1E6460-91573	KNOB, SACKER	1							
30	1	22117-080000	WASHER, 8	4							
30-1	1	22137-080000	WASHER, 8	4							R
	(A=FXXXXX)										
31	1	22137-050000	WASHER, 5	1							
32	1	22372-080000	PIN, SNAP 8	2							
33	1	22487-080260	PIN, H 8X 26	2							
34	1	22857-500161	SCREW, 5X16	1							

N:Old $\frac{\text{Yes}}{\text{No}}$ New, Q:Old $\frac{\text{No}}{\text{Yes}}$ New, R:Old $\frac{\text{Yes}}{\text{Yes}}$ New, S:Old $\frac{\text{No}}{\text{No}}$ New, W:Add, Z:Discontinued, F:Interchangeable by set, K:Q'ty Change

Copyright (C) YANMAR CO., LTD. All RightsReserved.

Fig.85. DASH BOARD A

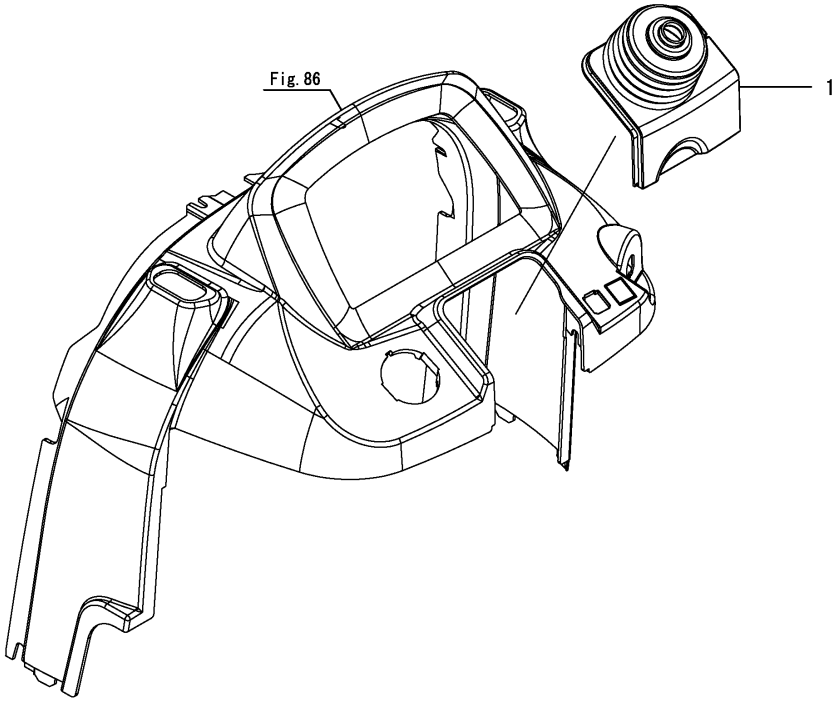

(A)=SC2400(CCY) (D)=
(B)= (E)=
(C)= (F)=

No.	Lev.	Parts No.	Description	Q'ty (A)	(B)	(C)	(D)	(E)	(F)	I	R
1	1	1A7880-17350	BOOT	1							

N:Old ◄Yes/No► New, Q:Old ◄No/Yes► New, R:Old ◄Yes/Yes► New, S:Old ◄No/No► New, W:Add, Z:Discontinued, F:Interchangeable by set, K:Q'ty Change

Copyright (C) YANMAR CO., LTD. All RightsReserved.

Fig.86. DASH BOARD B

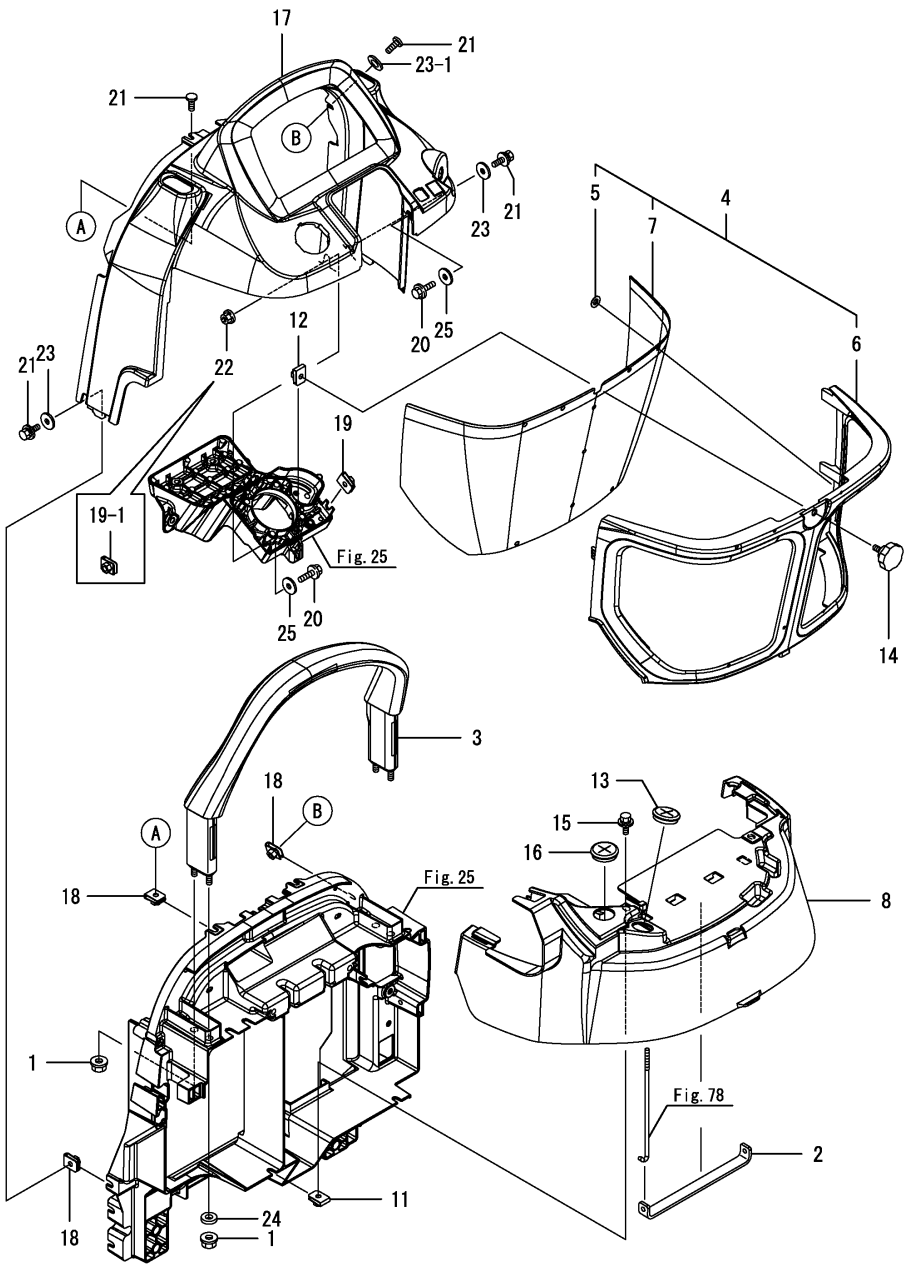

(A)=SC2400(CCY) (D)=
(B)= (E)=
(C)= (F)=

No.	Lev.	Parts No.	Description	Q'ty (A)	(B)	(C)	(D)	(E)	(F)	I	R
1	1	194990-22140	NUT, M8	4							
2	1	1A7880-58150	STAY,BATTERY	1							
2-1	1	1A7880-58151	STAY, BATTERY	1						R	
	(A=FZZZZZ)										
3	1	1A7880-61510	GRIP, ASSIST	1							
4	1	1A7880-61640	COVER, DASHBOARD	1							
5	2	1C6460-38240	NUT 5,PUSH	6							
6	2	1A7880-61650	COVER, DASHBOARD	1							
7	2	1A7880-61670	NET, DASH COVER	1							
8	1	1A7880-61690	COVER, DASHBOARD	1							
11	1	198071-61890	NUT, SPEED M6	2							
12	1	198071-61890	NUT, SPEED M6	1							
13	1	1A6150-76740	GROMMET, 31	1							
14	1	26064-060151	BOLT, 6X 15	1							
15	1	198461-60590	BOLT, M6X20	2							
16	1	1A6150-76740	GROMMET, 31	1							
17	1	1A7880-61600	COVER,DASHBOARD UPPR	1							
17-1	1	1A7880-61601	COVER, DASHBOARD	1						N	
	(A=FXXXXX)										
18	1	198071-61890	NUT, SPEED M6	5							
19	1	198071-61890	NUT, SPEED M6	1							
19-1	1	198071-61890	NUT, SPEED M6	2						K	
	(A=F000969)										
20	1	198461-60590	BOLT, M6X20	2							
20-1	1	26589-060162	SCREW, M6	2						N	
	(A=F000969)										
20-2	1	198461-60590	BOLT, M6X20	2						N	
	(A=F002378)										
21	1	26589-060162	SCREW, M6	5							
22	1	194990-22130	NUT, M6	1						Z	
	(A=F000969)										
23	1	22157-060000	WASHER, 6	2							
23-1	1	22157-060000	WASHER, 6	3						K	
	(A=F000969)										
24	1	194145-22430	SPACER, 18	1						W	
	(A=FXXXXX)										
25	1	22157-060000	WASHER, 6	2						W	
	(A=F000969)										
25-1	1	22157-060000	WASHER, 6	2						Z	
	(A=F002378)										

N:Old $\overset{\text{Yes}}{\underset{\text{No}}{\leftrightarrows}}$ New, Q:Old $\overset{\text{No}}{\underset{\text{Yes}}{\leftrightarrows}}$ New, R:Old $\overset{\text{Yes}}{\underset{\text{Yes}}{\leftrightarrows}}$ New, S:Old $\overset{\text{No}}{\underset{\text{No}}{\leftrightarrows}}$ New, W:Add, Z:Discontinued, F:Interchangeable by set, K:Q'ty Change

Copyright (C) YANMAR CO., LTD. All RightsReserved.

Fig.87. FENDER

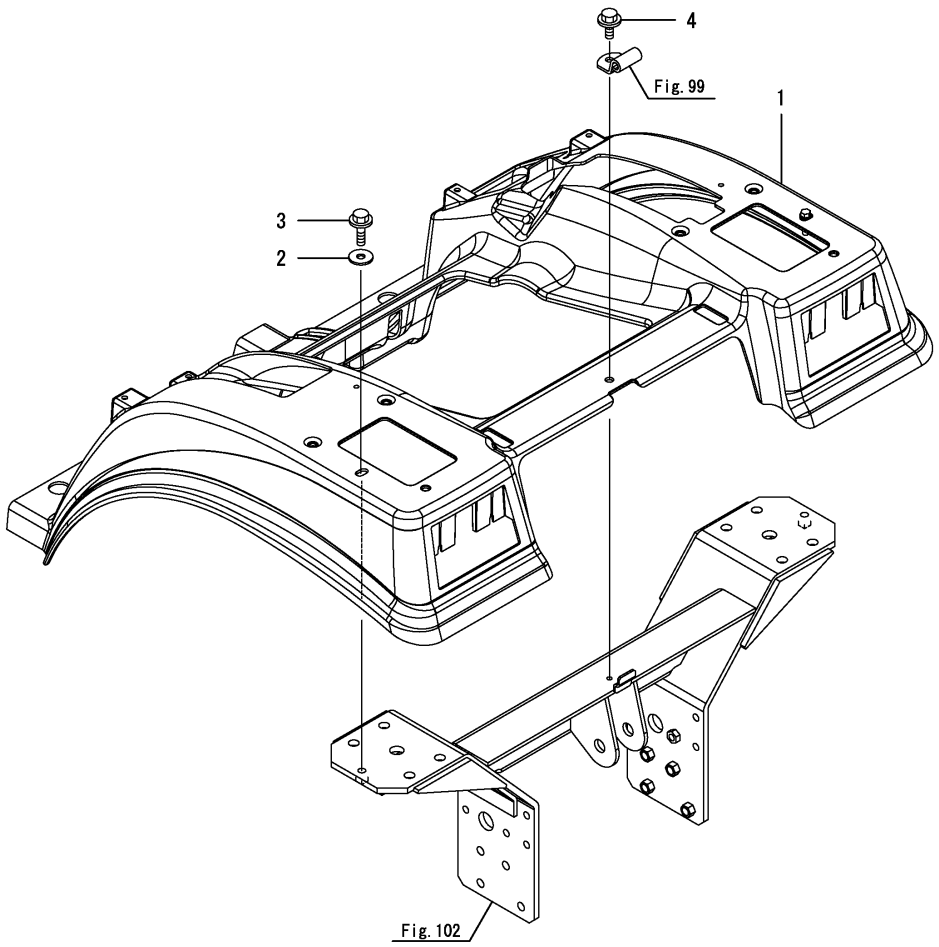

(A)=SC2400(CCY) (D)=
(B)= (E)=
(C)= (F)=

No.	Lev.	Parts No.	Description	Q'ty (A)	(B)	(C)	(D)	(E)	(F)	I	R
1	1	1A7880-62100	FENDER	1							
2	1	22157-080000	WASHER, 8	2							
3	1	26106-080302	BOLT, M8X 30 PLATED	2							
4	1	26106-080202	BOLT, M8X 20 PLATED	1						W	
	(A=FXXXXX)										

N:Old $\xleftarrow[\text{No}]{\text{Yes}}$ New, Q:Old $\xleftarrow[\text{Yes}]{\text{No}}$ New, R:Old $\xleftarrow[\text{Yes}]{\text{Yes}}$ New, S:Old $\xleftarrow[\text{No}]{\text{No}}$ New, W:Add, Z:Discontinued, F:Interchangeable by set, K:Q'ty Change

Copyright (C) YANMAR CO., LTD. All RightsReserved.

Fig.88. LEVER GUIDE

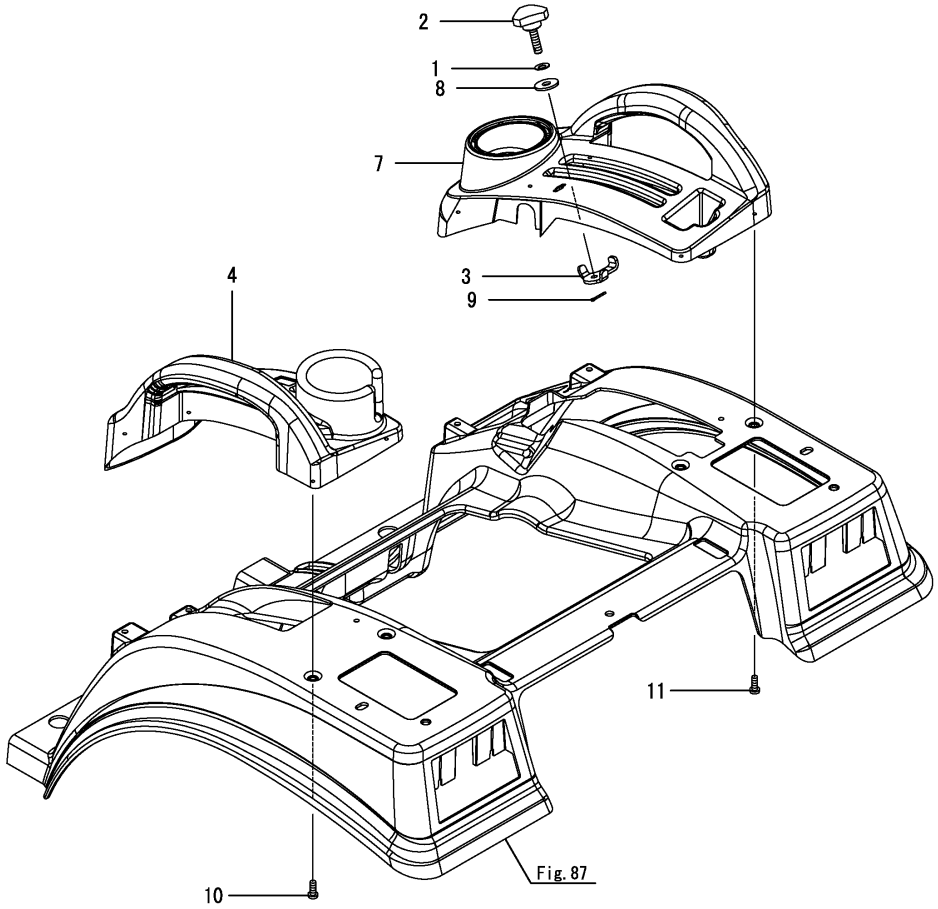

(A)=SC2400(CCY) (D)=
(B)= (E)=
(C)= (F)=

No.	Lev.	Parts No.	Description	Q'ty (A)	(B)	(C)	(D)	(E)	(F)	I	R
1	1	194300-37570	SPRING	1							
2	1	198165-47750	KNOB, CONTROL	1							
3	1	1A7510-47760	STOPPER, CONTROL	1							
4	1	1A7880-62240	GUIDE ASSY, LEVER LM	1							
7	1	1A7880-62300	GUIDE, LEVER R	1							
8	1	22157-080000	WASHER, 8	1							
9	1	22417-200160	PIN, COTTER 2.0X16	1							
10	1	22857-600160	SCREW, 6X16	4							
11	1	22857-600160	SCREW, 6X16	5							

N:Old $\frac{\text{Yes}}{\text{No}}$ New, Q:Old $\frac{\text{No}}{\text{Yes}}$ New, R:Old $\frac{\text{Yes}}{\text{Yes}}$ New, S:Old $\frac{\text{No}}{\text{No}}$ New, W:Add, Z:Discontinued, F:Interchangeable by set, K:Q'ty Change

Copyright (C) YANMAR CO., LTD. All RightsReserved.

Fig.89. FOOTREST STAY

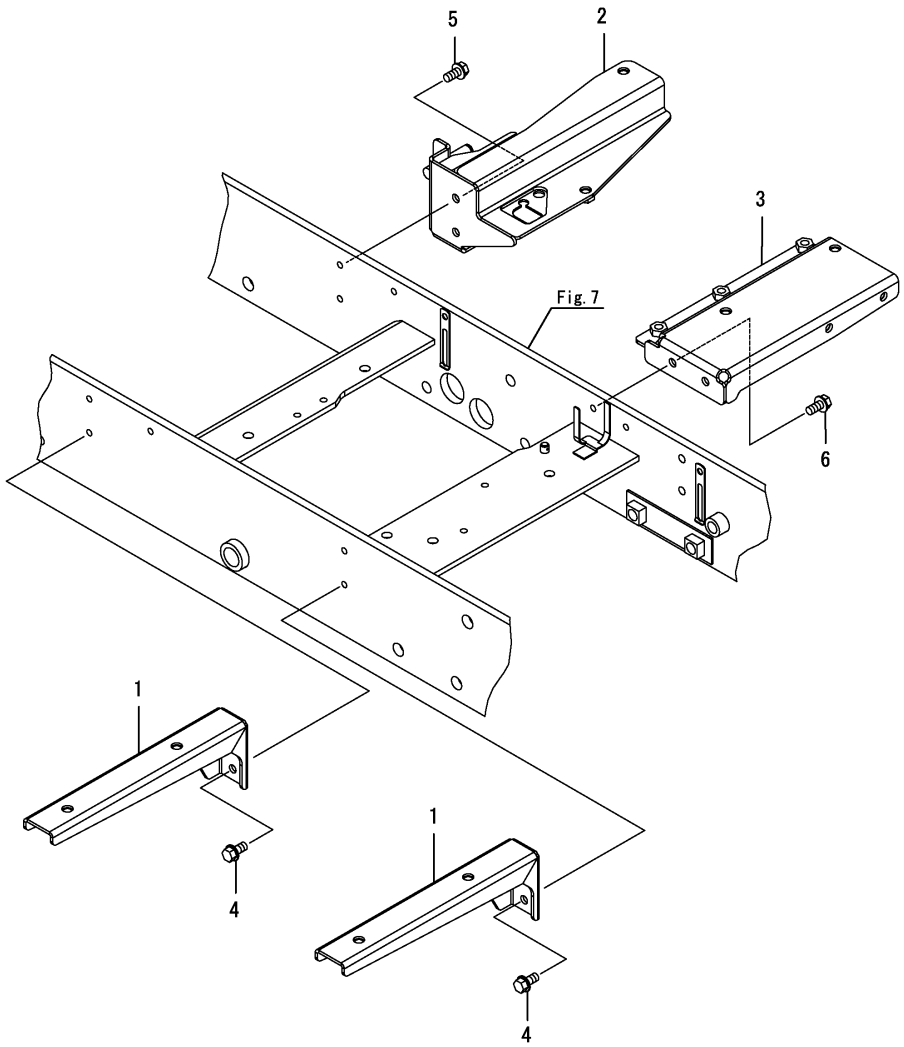

(A)=SC2400(CCY) (D)=
(B)= (E)=
(C)= (F)=

No.	Lev.	Parts No.	Description	Q'ty (A)	(B)	(C)	(D)	(E)	(F)	I	R
1	1	1A7880-62550	STAY ASSY, STEP L	2							
2	1	1A7880-62600	STAY ASSY, STEP RF	1							
2-1	1	1A7880-62601	STAY ASSY, STEP RF	1						N	
	(A=F010101)										
3	1	1A7880-62650	STAY ASSY, STEP RR	1							
4	1	26106-080162	BOLT, M8X 16 PLATED	4							
5	1	26106-080162	BOLT, M8X 16 PLATED	2							
6	1	26106-080162	BOLT, M8X 16 PLATED	2							

N:Old $\xleftrightarrow[\text{No}]{\text{Yes}}$ New, Q:Old $\xleftrightarrow[\text{Yes}]{\text{No}}$ New, R:Old $\xleftrightarrow[\text{Yes}]{\text{Yes}}$ New, S:Old $\xleftrightarrow[\text{No}]{\text{No}}$ New, W:Add, Z:Discontinued, F:Interchangeable by set, K:Q'ty Change

Copyright (C) YANMAR CO., LTD. All RightsReserved.

Fig.90. FOOTREST

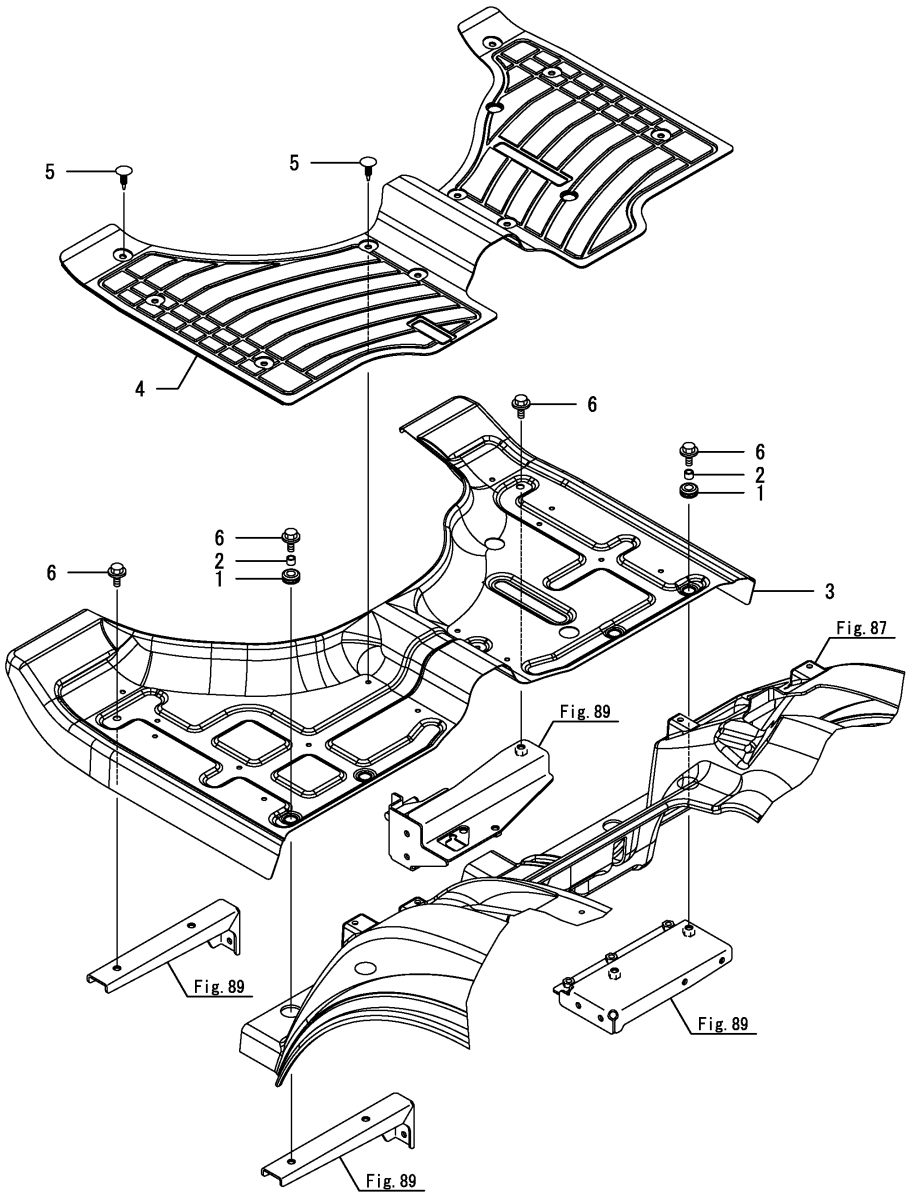

(A)=SC2400(CCY) (D)=
(B)= (E)=
(C)= (F)=

No.	Lev.	Parts No.	Description	Q'ty (A)	(B)	(C)	(D)	(E)	(F)	I	R
1	1	198360-03260	GROMMET, 12	4							
2	1	198360-03270	SPACER	4							
3	1	1A7880-62500	STEP	1							
4	1	1A7880-62510	SHEET ,STEP	1							
5	1	198162-62630	FASNER	10							
6	1	26106-080202	BOLT, M8X 20 PLATED	6							

N:Old $\frac{\text{Yes}}{\text{No}}$ New, Q:Old $\frac{\text{No}}{\text{Yes}}$ New, R:Old $\frac{\text{Yes}}{\text{Yes}}$ New, S:Old $\frac{\text{No}}{\text{No}}$ New, W:Add, Z:Discontinued, F:Interchangeable by set, K:Q'ty Change

Copyright (C) YANMAR CO., LTD. All RightsReserved.

Fig.91. SEAT

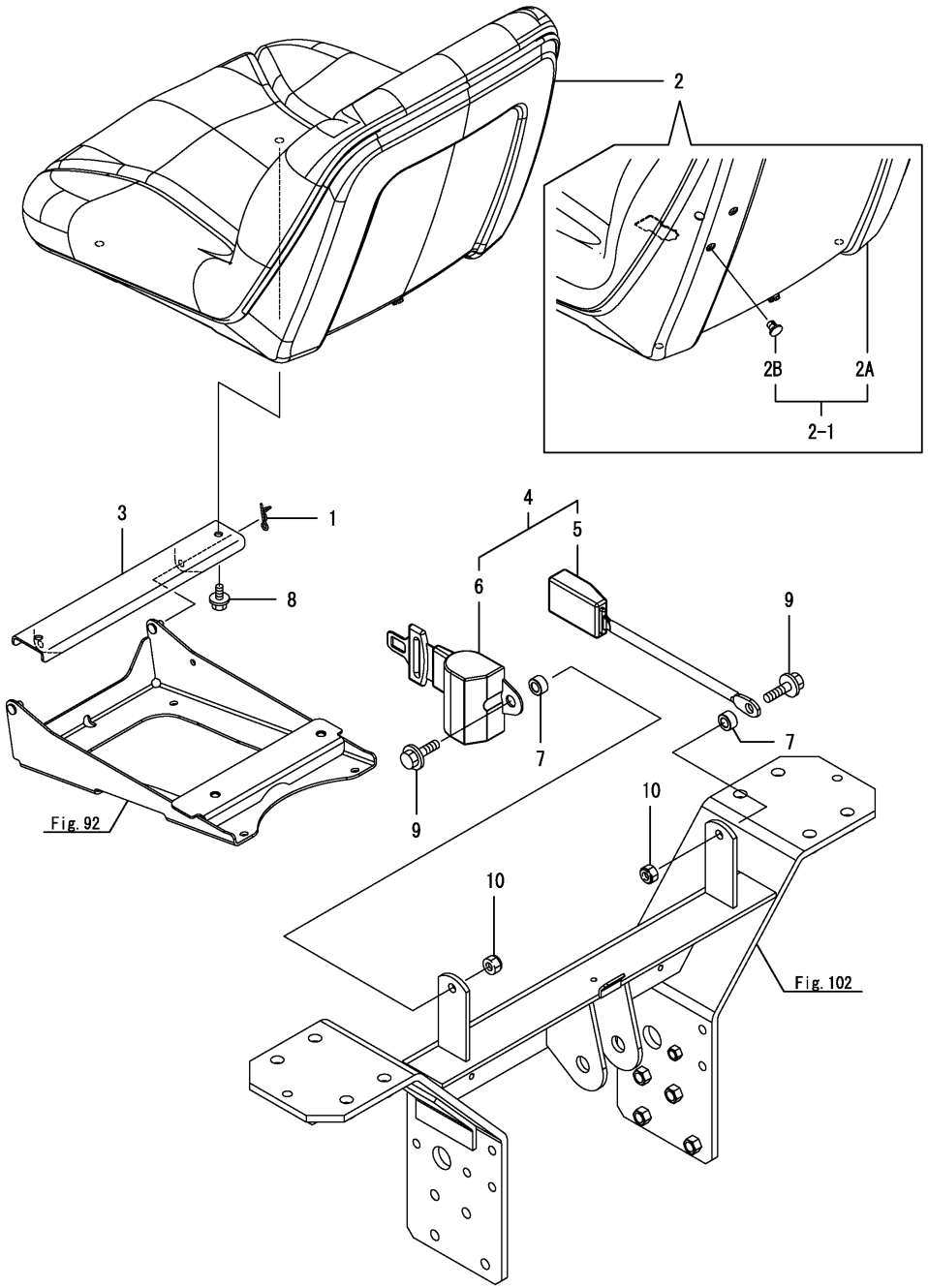

(A)=SC2400(CCY) (D)=
(B)= (E)=
(C)= (F)=

No.	Lev.	Parts No.	Description	Q'ty (A)	(B)	(C)	(D)	(E)	(F)	I	R
1	1	1C6281-52320	PIN, SNAP 8	1							
2	1	1A7880-63010	SEAT ASSY, OPERATOR	1							
2-1	1	1A7880-63050	SEAT ASSY, OPERATOR	1						N	
	(A=F020101)										
2-2	1	1A7880-63020	SEAT, OPERATOR	1						N	
	(A=FXXXXX)										
2A	2	1A8300-63010	SEAT ASSY, OPERATOR	1						W	
	(A=F020101)										
2A-1	2	1A8300-63010	SEAT ASSY, OPERATOR	1						Z	
	(A=FXXXXX)										
2B	2	1A7880-63060	NUT PLUG	6						W	
	(A=F020101)										
2B-1	2	1A7880-63060	NUT PLUG	6						Z	
	(A=FXXXXX)										
3	1	1A7880-63100	HINGE ASSY, SEAT	1							
4	1	1A8160-63400	BELT ASSY, SEAT	1							
5	2	1A8160-63410	BELT ASSY, SEAT	1							
6	2	1A8160-63420	BELT ASSY, SEAT	1							
7	1	1A8160-63440	COLLAR, SEAT BELT	2							
8	1	26106-080162	BOLT, M8X 16 PLATED	2							
9	1	26106-100352	BOLT, M10X 35 PLATED	2							
10	1	26346-100002	NUT, M10	2							

N:Old $\xleftarrow[\text{No}]{\text{Yes}}$ New, Q:Old $\xleftarrow[\text{Yes}]{\text{No}}$ New, R:Old $\xleftarrow[\text{Yes}]{\text{Yes}}$ New, S:Old $\xleftarrow[\text{No}]{\text{No}}$ New, W:Add, Z:Discontinued, F:Interchangeable by set, K:Q'ty Change

Copyright (C) YANMAR CO., LTD. All RightsReserved.

Fig.92. SEAT STAY

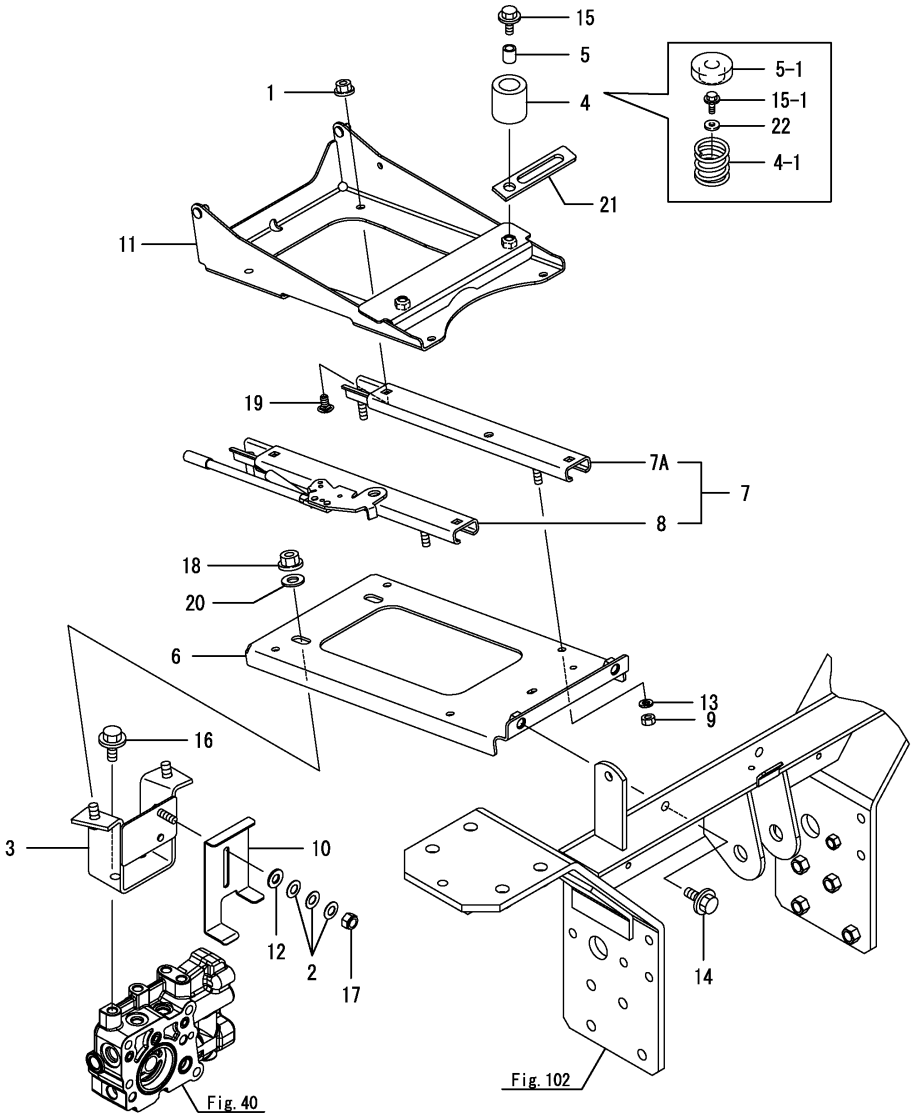

(A)=SC2400(CCY) (D)=
(B)= (E)=
(C)= (F)=

No.	Lev.	Parts No.	Description	Q'ty (A)	(B)	(C)	(D)	(E)	(F)	I	R
1	1	194990-22140	NUT, M8	4							
2	1	194300-37570	SPRING	3							
3	1	1A7880-63200	STAY ASSY, SEAT	1							
4	1	194151-63240	RUBBER, CUSHION	2							
4-1	1	1A8115-63260	SPRING	2						S	
	(A=F020101)										
5	1	194151-63250	COLLAR, CUSHION	2							
5-1	1	198284-63270	STOPPER, SEAT	2						S	
	(A=F020101)										
6	1	1A7880-63300	STAY ASSY, RAIL A	1							
7	1	1A7880-63390	RAIL KIT, SEAT	1							
7A	2	1A7880-63400	RAIL ASSY, SEAT	1							
8	2	1A7880-63410	RAIL ASSY, SEAT	1							
9	1	1A7880-63420	NUT, 5/16-18UNC	4							
10	1	1A7880-63450	PLATE,SWITCH	1							
10-1	1	1A7880-63451	PLATE, SWITCH	1						R	
	(A=F010325)										
11	1	1A7880-63500	STAY ASSY, RAIL B	1							
12	1	22137-080000	WASHER, 8	1							
13	1	22217-080000	WASHER, SPRING 8	4							
14	1	26014-100252	BOLT, M10X 25	2							
15	1	26106-080252	BOLT, M8X 25 PLATED	2							
15-1	1	26106-080162	BOLT, M8X 16 PLATED	2						S	
	(A=F020101)										
15-2	1	26106-080202	BOLT, M8X 20 PLATED	2						N	
	(A=FXXXXX)										
16	1	26106-100162	BOLT, M10X 16 PLATED	2							
17	1	26347-080002	NUT, M8	1							
18	1	26366-100002	NUT, M10	2							
19	1	26487-080163	BOLT, M8X16	4							
20	1	22137-100000	WASHER, 10	2							
21	1	194440-51620	CLAMP	1						W	
	(A=F002378)										
22	1	22157-080000	WASHER, 8	2						W	
	(A=FXXXXX)										

N:Old $\overset{\text{Yes}}{\underset{\text{No}}{\leftrightarrows}}$ New, Q:Old $\overset{\text{No}}{\underset{\text{Yes}}{\leftrightarrows}}$ New, R:Old $\overset{\text{Yes}}{\underset{\text{Yes}}{\leftrightarrows}}$ New, S:Old $\overset{\text{No}}{\underset{\text{No}}{\leftrightarrows}}$ New, W:Add, Z:Discontinued, F:Interchangeable by set, K:Q'ty Change

Copyright (C) YANMAR CO., LTD. All RightsReserved.

Fig.93. LABEL(SAFETY

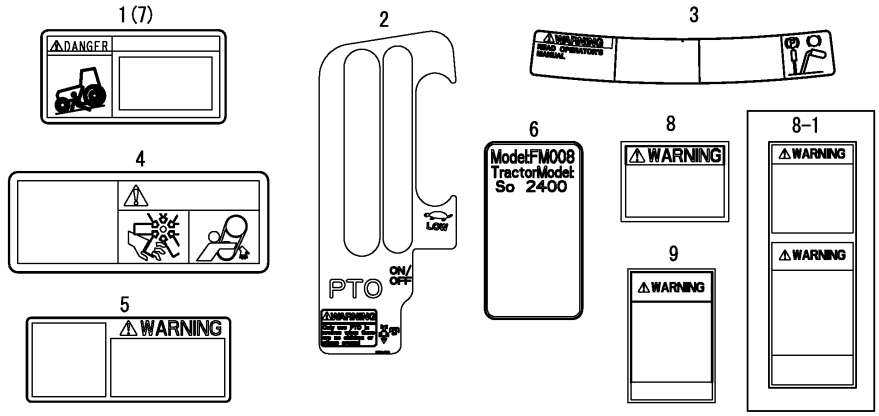

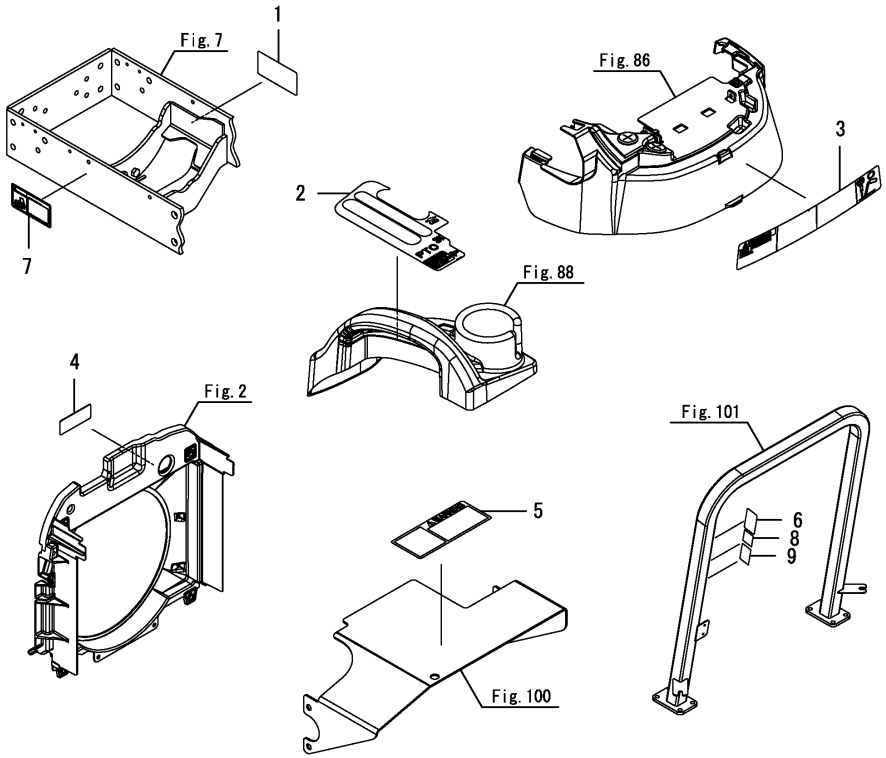

(A)=SC2400(CCY) (D)=
(B)= (E)=
(C)= (F)=

No.	Lev.	Parts No.	Description	Q'ty (A)	(B)	(C)	(D)	(E)	(F)	I	R
1	1	1A8160-65300	LABEL,DANGER,START	1							
2	1	1A7880-65350	LABEL, LEVERGUIDE L	1							
2-1	1	1A7880-65351	LABEL, LEVERGUIDE L	1						N	
	(A=F002763)										
3	1	1A7880-65600	LABEL,CAUTION,GENERA	1							
3-1	1	1A7880-65601	LABEL,CAUTION,GENERA	1						N	
	(A=F002763)										
4	1	1A7880-65620	LABEL,WARNING,FAN	1							
4-1	1	1A7880-65610	LABEL,WARNING,FAN	1						N	
	(A=F002763)										
5	1	198220-65621	LABEL, P.T.O.WARNING	1							
6	1	1A7880-65980	LABEL,ROPS	1							
6-1	1	1A7880-65981	LABEL,ROPS	1						N	
	(A=F002739)										
7	1	1A8160-65310	LABEL,WARNIBG,STOP	1							
8	1	1A7880-85170	SAFETY DECAL	1							
8-1	1	1A7880-85190	SAFETY DECAL, ROPS	1						N	
	(A=F010211)										
9	1	1A7880-85180	SAFETY DECAL (BELT	1						Z	
	(A=F010211)										

N:Old $\xleftarrow[\text{No}]{\text{Yes}}$ New, Q:Old $\xleftarrow[\text{Yes}]{\text{No}}$ New, R:Old $\xleftarrow[\text{Yes}]{\text{Yes}}$ New, S:Old $\xleftarrow[\text{No}]{\text{No}}$ New, W:Add, Z:Discontinued, F:Interchangeable by set, K:Q'ty Change

Copyright (C) YANMAR CO., LTD. All RightsReserved.

Fig.94. LABEL(1)

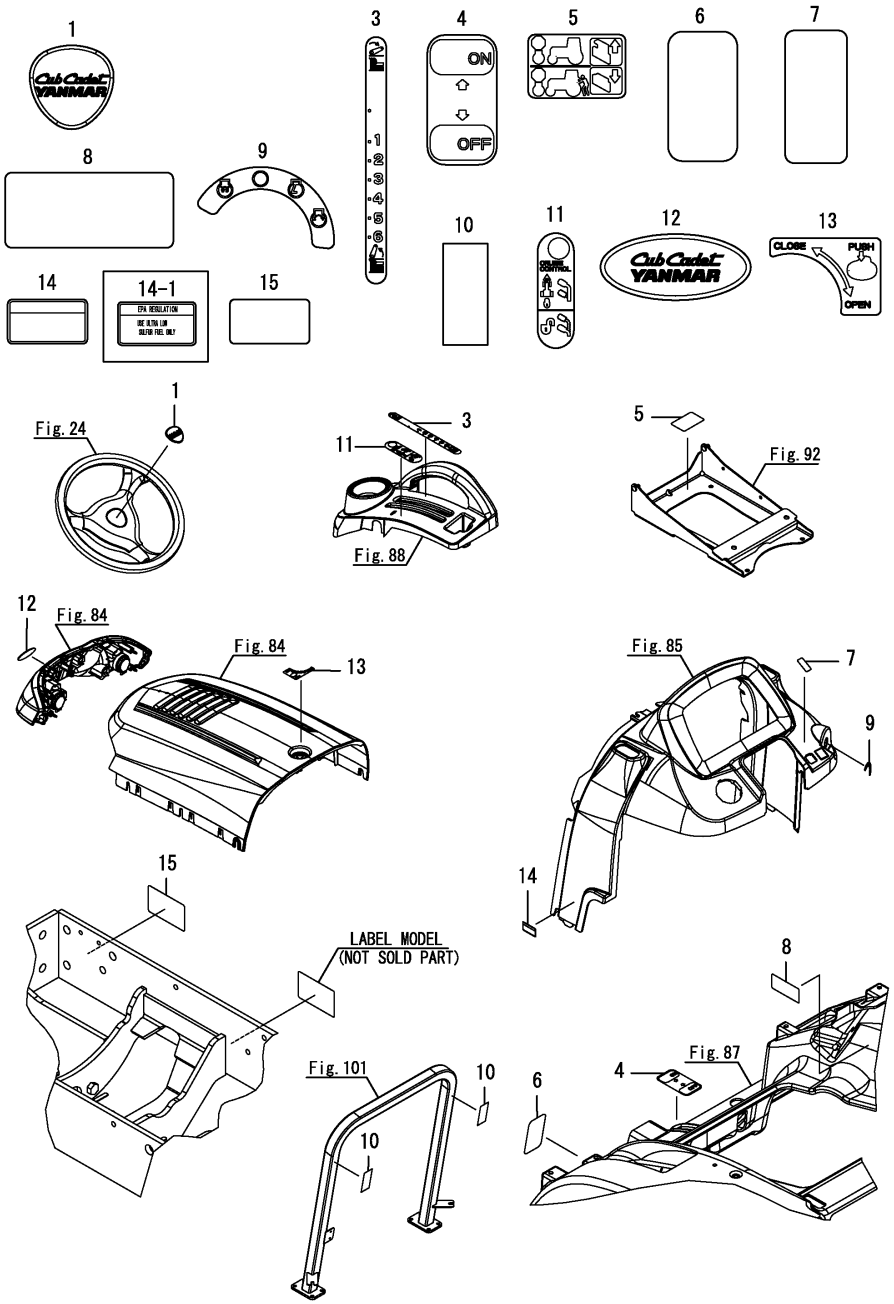

(A)=SC2400(CCY) (D)=
(B)= (E)=
(C)= (F)=

No.	Lev.	Parts No.	Description	Q'ty (A)	(B)	(C)	(D)	(E)	(F)	I	R
1	1	1A7880-15780	PLATE	1							
3	1	1A7880-65330	LABEL POSITION	1							
3-1	1	1A7880-65331	LABEL POSITION	1						N	
	(A=F002763)										
4	1	1A7880-65370	LABEL, LEVER 4WD	1							
5	1	1A7880-65380	LABEL, LEVER VALVE	1							
6	1	1A7880-65390	LABEL,DIFFLOCK	1							
7	1	1A7880-65510	LABEL,ACCELERAT.LVR.	1							
7-1	1	1A7880-65511	LABEL,ACCELERAT.LVR.	1						N	
	(A=F002763)										
8	1	1A7880-65630	LABEL,SOCKET	1							
9	1	1A7880-65720	LABLE,START SWITCH	1							
9-1	1	1A7880-65721	LABLE,START SWITCH	1						N	
	(A=F002763)										
10	1	1A8160-65860	TAPE, 50X115	2							
11	1	1A7880-65340	LABEL LEVER GUIDE L	1							
11-1	1	1A7880-65341	LABEL LEVER GUIDE L	1						N	
	(A=F002763)										
12	1	1A7880-65560	LABEL CENTER LOGO	1						Z	
	(A=FZZZZZ)										
13	1	1A7880-65570	LABEL HOOD OPEN	1							
14	1	114110-07760	LABEL, FUEL OIL	1							
14-1	1	1A8250-65650	LABEL, FUEL OIL	1						S	
	(A=FZZZZZ)										
15	1	1A8250-65390	LABEL,SPARK ARRESTOR	1						W	
	(A=FXXXXX)										

N:Old $\xleftrightarrow[\text{No}]{\text{Yes}}$ New, Q:Old $\xleftrightarrow[\text{Yes}]{\text{No}}$ New, R:Old $\xleftrightarrow[\text{Yes}]{\text{Yes}}$ New, S:Old $\xleftrightarrow[\text{No}]{\text{No}}$ New, W:Add, Z:Discontinued, F:Interchangeable by set, K:Q'ty Change

Copyright (C) YANMAR CO., LTD. All RightsReserved.

Fig.95. LABEL(2)

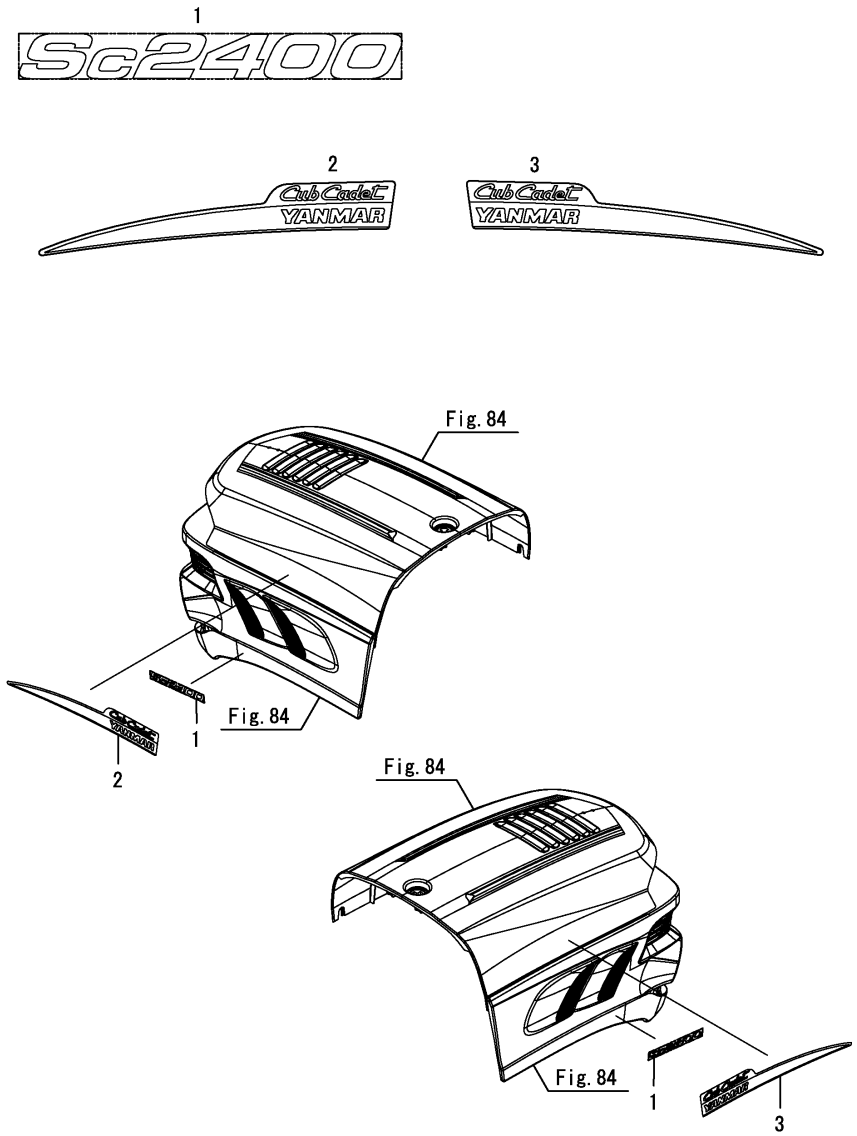

(A)=SC2400(CCY) (D)=
(B)= (E)=
(C)= (F)=

No.	Lev.	Parts No.	Description	Q'ty (A)	(B)	(C)	(D)	(E)	(F)	I	R
1	1	1A7880-64710	LABEL ,MODEL	2							
2	1	1A7880-65580	LABEL,LOGO L.H.	1							
3	1	1A7880-65590	LABEL,LOGO R.H.	1							

N:Old ◄Yes/No► New, Q:Old ◄No/Yes► New, R:Old ◄Yes/Yes► New, S:Old ◄No/No► New, W:Add, Z:Discontinued, F:Interchangeable by set, K:Q'ty Change

Copyright (C) YANMAR CO., LTD. All RightsReserved.

Fig.96. LABEL(3)

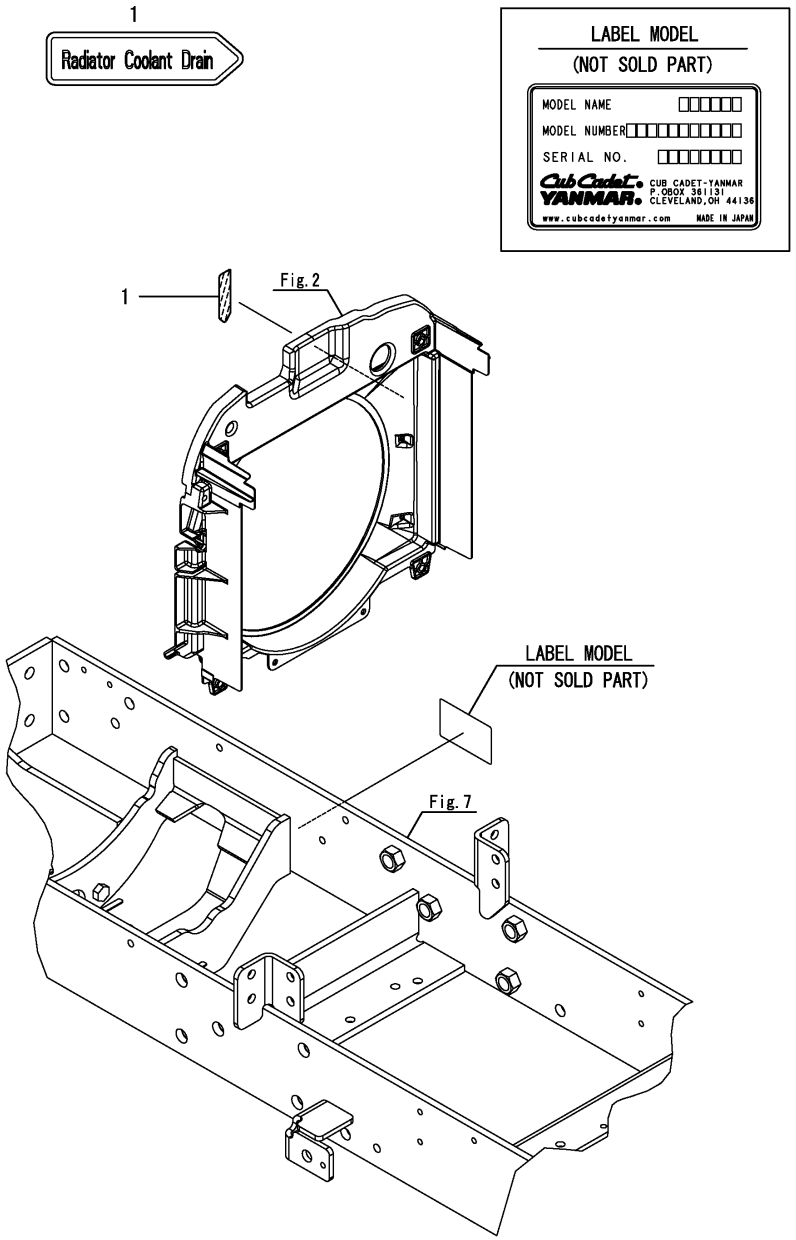

(A)=SC2400(CCY) (D)=
(B)= (E)=
(C)= (F)=

No.	Lev.	Parts No.	Description	Q'ty (A)	(B)	(C)	(D)	(E)	(F)	I	R
1	1	1A7340-65080	LABEL,DRAIN	1							

N:Old ←Yes/No→ New, Q:Old ←No/Yes→ New, R:Old ←Yes/Yes→ New, S:Old ←No/No→ New, W:Add, Z:Discontinued, F:Interchangeable by set, K:Q'ty Change

Copyright (C) YANMAR CO., LTD. All RightsReserved.

Fig.97. LABEL(4)

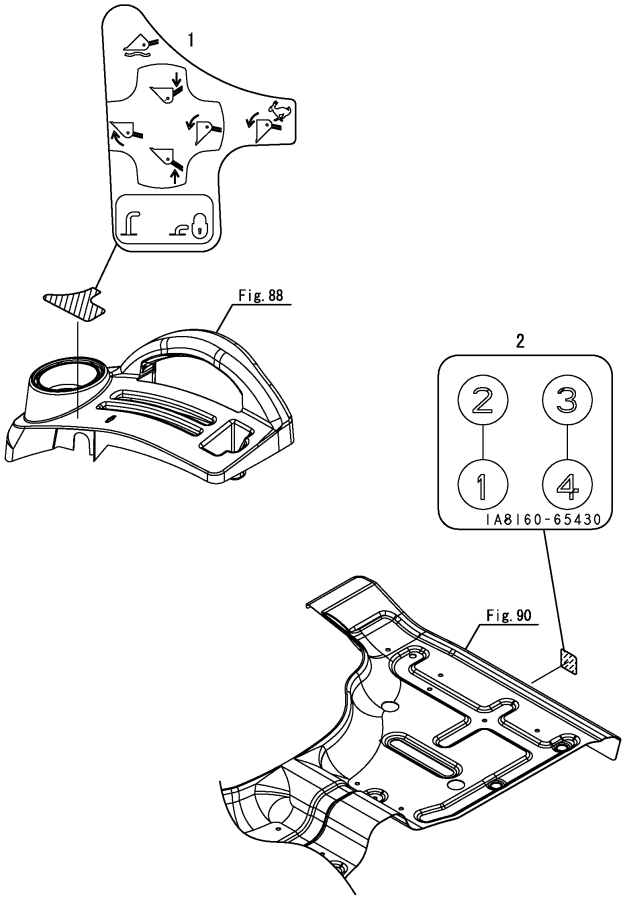

(A)=SC2400(CCY) (D)=
(B)= (E)=
(C)= (F)=

No.	Lev.	Parts No.	Description	Q'ty (A)	(B)	(C)	(D)	(E)	(F)	I	R
1	1	1A7880-65410	LABEL,SCV LEVER	1							
1-1	1	1A7880-65411	LABEL,SCV LEVER	1						N	
	(A=F002763)										
2	1	1A8160-65430	LABEL,SCV COUPLER	1							

Remarks
*OPTIONAL PARTS
SCVKIT-SC2400
Fig.71,72,76,97 ARE INCORPORATED
IN THIS KIT.

N:Old $\xleftrightarrow[\text{No}]{\text{Yes}}$ New, Q:Old $\xleftrightarrow[\text{Yes}]{\text{No}}$ New, R:Old $\xleftrightarrow[\text{Yes}]{\text{Yes}}$ New, S:Old $\xleftrightarrow[\text{No}]{\text{No}}$ New, W:Add, Z:Discontinued, F:Interchangeable by set, K:Q'ty Change

Copyright (C) YANMAR CO., LTD. All RightsReserved.

Fig.99. 3P KIT

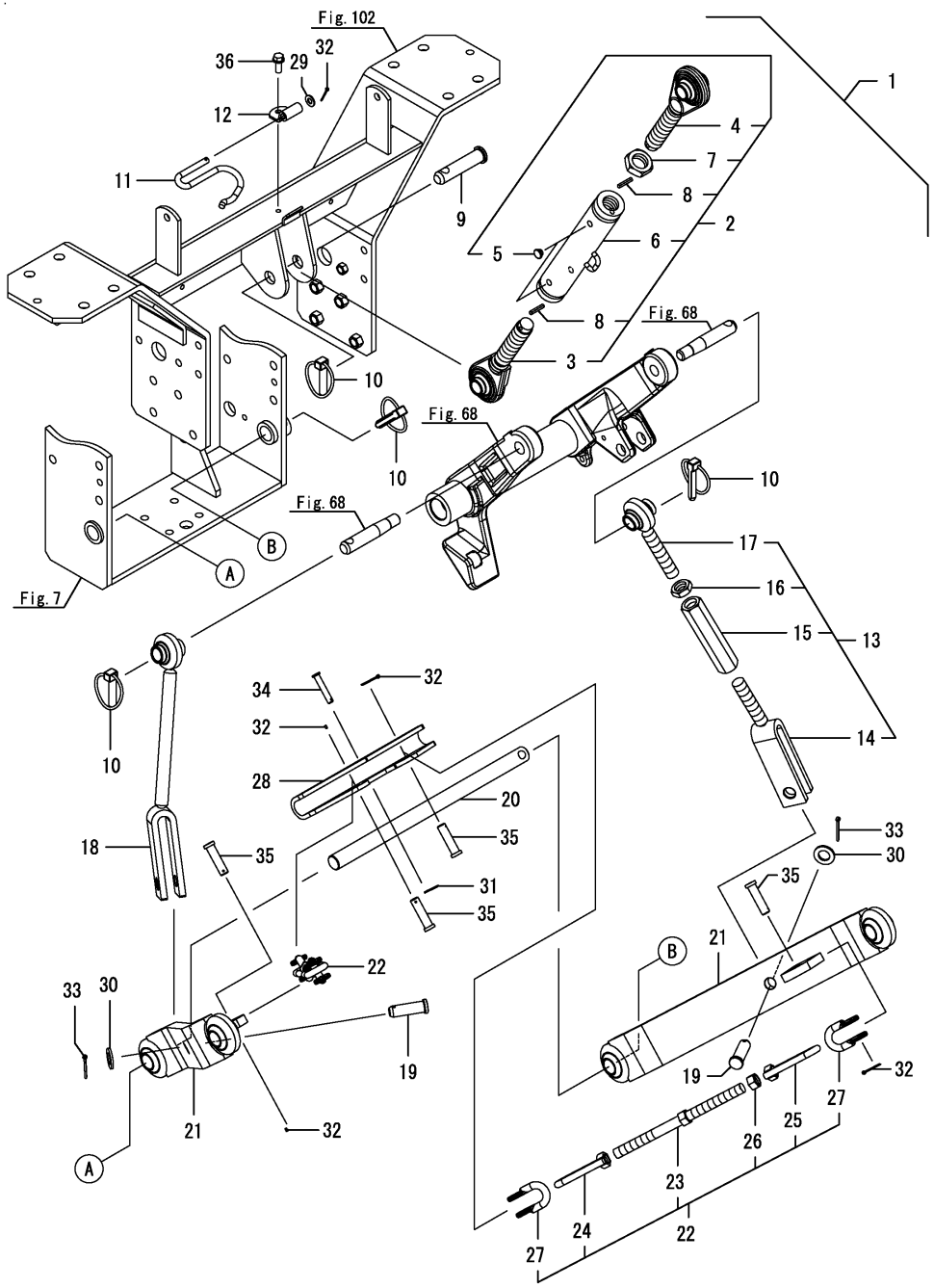

(A)=SC2400(CCY) (D)=
(B)= (E)=
(C)= (F)=

No.	Lev.	Parts No.	Description	Q'ty (A)	(B)	(C)	(D)	(E)	(F)	I	R
1	1	1A7880-71800	HITCH KIT, 3 POINT	1							
2	2	1A7880-71110	LINK ASSY, TOP	1							
3	3	1A7880-71210	BOLT, EYE	1							
4	3	1A7880-71220	BOLT, EYE	1							
5	3	1A7335-71250	CAP	4							
6	3	1A7880-71500	TURNBACKLE ASSY	1							
7	3	1A7880-71580	NUT, M24	1							
8	3	22351-050025	PIN, SPRING 5.0X25	2							
9	2	1A7500-71120	PIN, LINK	1							
10	2	1A7500-71130	PIN ASSY, LINTCH	4							
11	2	1A7880-71550	SPRING	1							
12	2	1A7880-71720	PLATE, TOP LINK	1							
13	2	1A7880-72100	ROD ASSY, LIFT R	1							
14	3	1A7880-72310	END ASSY, LOWER	1							
15	3	1A7880-72320	TURNBUCKLE	1							
16	3	1A7880-72330	NUT, M18	1							
17	3	1A7880-72340	END ASSY, UPPER	1							
18	2	1A7880-72300	ROD ASSY, LIFT L	1							
19	2	198234-72550	PIN, 16X44	2							
20	2	1A7880-73150	BAR, LOWER LINK	1							
21	2	1A7880-73500	LINK ASSY, LOWER	2							
22	2	1A7880-74100	CHAIN ASSY, CHECK	2							
23	3	1A7880-74110	TURNBACKLE ASSY	2							
24	3	1A7880-74120	NUT, EYE	2							
25	3	1A7880-74130	NUT, EYE	2							
26	3	1A7880-74140	NUT, M14	2							
27	3	1A7880-74150	SHACKLE	4							
28	2	1A7880-74550	HINGE, CHECK CHAIN	1							
29	1	22137-080000	WASHER, 8	1							
30	1	22137-160000	WASHER, 16	2							
31	1	22372-080000	PIN, SNAP 8	1							
32	1	22417-250250	PIN, COTTER 2.5X25	5							
33	1	22417-320320	PIN, COTTER 3.2X32	2							
34	1	22487-080400	PIN, H 8X 40	1							
35	1	22487-120400	PIN, H12X40	4							
36	1	26106-080202	BOLT, M8X 20 PLATED	1						Z	

(A=FXXXXX)

N:Old $\frac{\text{Yes}}{\text{No}}$ New, Q:Old $\frac{\text{No}}{\text{Yes}}$ New, R:Old $\frac{\text{Yes}}{\text{Yes}}$ New, S:Old $\frac{\text{No}}{\text{No}}$ New, W:Add, Z:Discontinued, F:Interchangeable by set, K:Q'ty Change

Copyright (C) YANMAR CO., LTD. All RightsReserved.

Fig.100. SAFETY COVER(PTO

(A)=SC2400(CCY) (D)=
(B)= (E)=
(C)= (F)=

No.	Lev.	Parts No.	Description	Q'ty (A)	(B)	(C)	(D)	(E)	(F)	I	R
1	1	1A7880-71130	COVER ASSY, PTO M	1							
4	1	26106-080202	BOLT, M8X 20 PLATED	4							

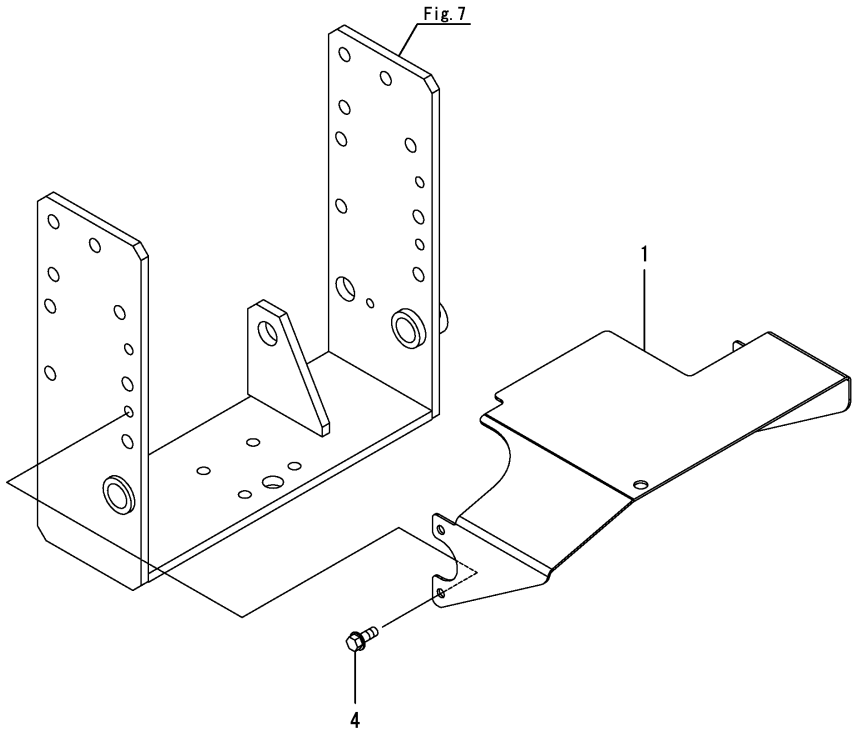

N:Old ◄Yes/No► New, Q:Old ◄No/Yes► New, R:Old ◄Yes/Yes► New, S:Old ◄No/No► New, W:Add, Z:Discontinued, F:Interchangeable by set, K:Q'ty Change

Copyright (C) YANMAR CO., LTD. All RightsReserved.

Fig.101. ROPS UPPER

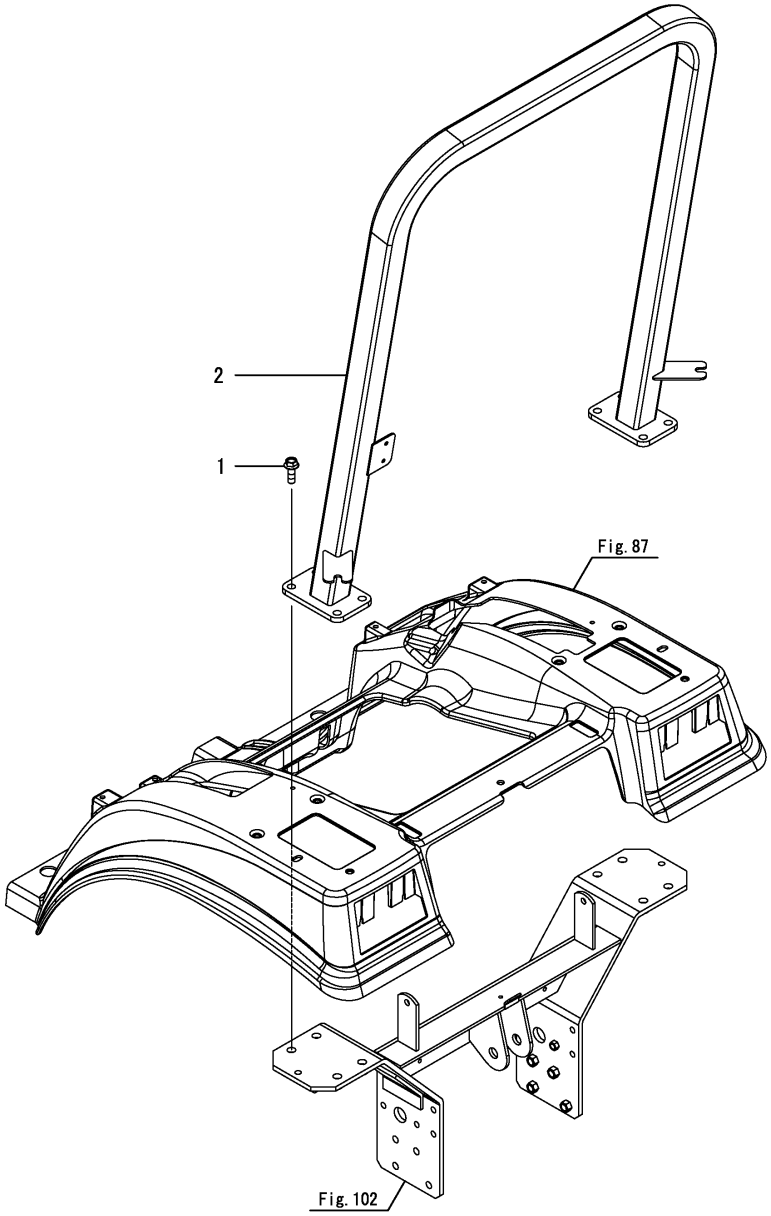

(A)=SC2400(CCY) (D)=
(B)= (E)=
(C)= (F)=

No.	Lev.	Parts No.	Description	Q'ty (A)	(B)	(C)	(D)	(E)	(F)	I	R
1	1	1A8160-11520	BOLT, M12X34	8							
1-1	1	198165-85970	BOLT, M12X35	8						N	
	(A=F010101)										
2	1	1A7880-85000	FRAME ASSY, UPPER M	1							

N:Old $\xleftrightarrow[\text{No}]{\text{Yes}}$ New, Q:Old $\xleftrightarrow[\text{Yes}]{\text{No}}$ New, R:Old $\xleftrightarrow[\text{Yes}]{\text{Yes}}$ New, S:Old $\xleftrightarrow[\text{No}]{\text{No}}$ New, W:Add, Z:Discontinued, F:Interchangeable by set, K:Q'ty Change

Copyright (C) YANMAR CO., LTD. All RightsReserved.

Fig.102. LOWER FRAME

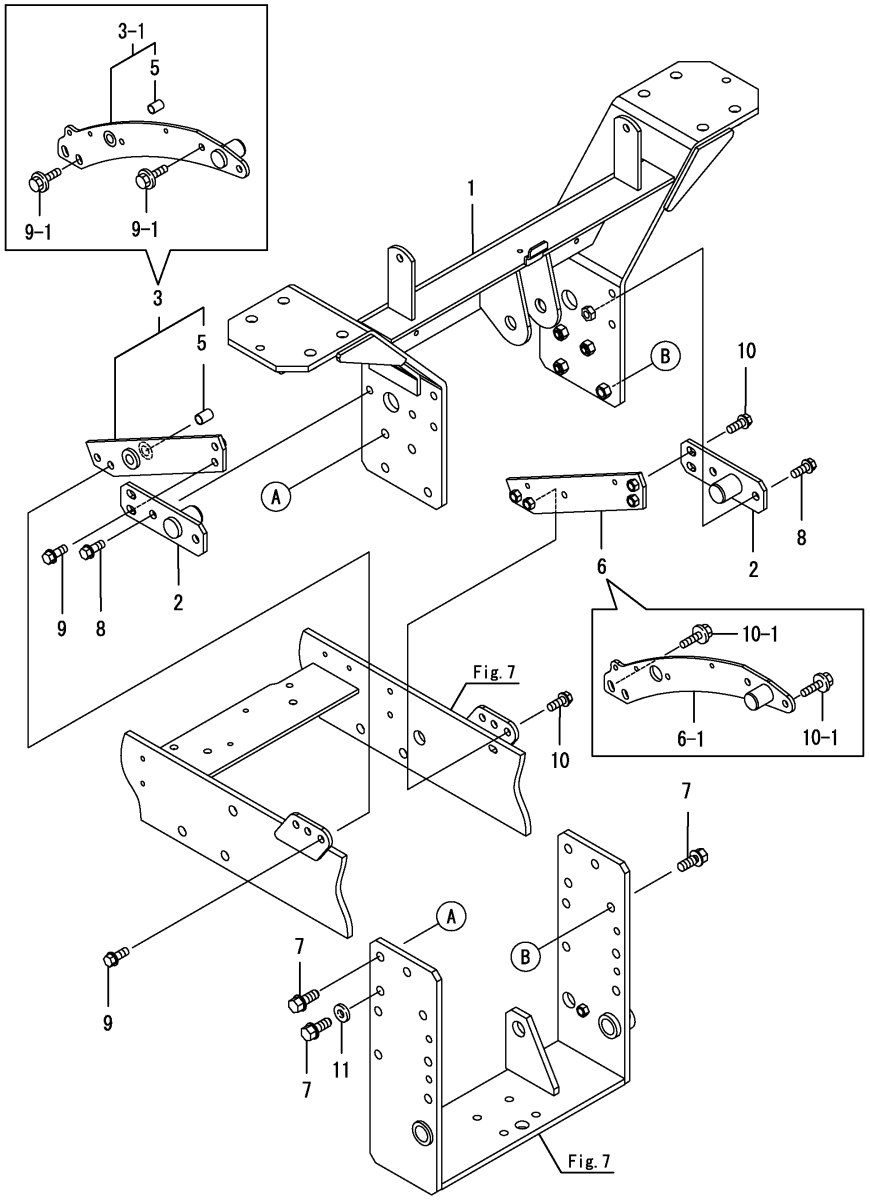

(A)=SC2400(CCY) (D)=
(B)= (E)=
(C)= (F)=

No.	Lev.	Parts No.	Description	Q'ty (A)	(B)	(C)	(D)	(E)	(F)	I	R
1	1	1A7880-85300	FRAME ASSY, LOWER	1							
2	1	1A7880-85430	PLATE ASSY, SIDE	2						Z	
	(A=F010101)										
3	1	1A7880-85490	FRAME ASSY, JOINT L	1							
3-1	1	1A7882-85490	PLATE ASSY, SIDE L	1						N	
	(A=F010101)										
5	2	24550-012200	BUSH, 12X20	1							
6	1	1A7880-85550	FRAME ASSY, JOINT R	1							
6-1	1	1A7882-85550	PLATE ASSY, SIDE R	1						N	
	(A=F010101)										
7	1	1A6770-85920	BOLT, M12X30	8							
8	1	26106-100252	BOLT, M10X 25 PLATED	4						Z	
	(A=F010101)										
9	1	26106-100252	BOLT, M10X 25 PLATED	4							
9-1	1	26106-100302	BOLT, M10X 30 PLATED	4						N	
	(A=F010101)										
10	1	26106-100252	BOLT, M10X 25 PLATED	4							
10-1	1	26106-100302	BOLT, M10X 30 PLATED	4						N	
	(A=F010101)										
11	1	22137-120000	WASHER, 12	1						W	
	(A=FXXXXX)										

N:Old $\overset{\text{Yes}}{\underset{\text{No}}{\leftrightarrow}}$ New, Q:Old $\overset{\text{No}}{\underset{\text{Yes}}{\leftrightarrow}}$ New, R:Old $\overset{\text{Yes}}{\underset{\text{Yes}}{\leftrightarrow}}$ New, S:Old $\overset{\text{No}}{\underset{\text{No}}{\leftrightarrow}}$ New, W:Add, Z:Discontinued, F:Interchangeable by set, K:Q'ty Change

Copyright (C) YANMAR CO., LTD. All RightsReserved.

Fig.103. SMV

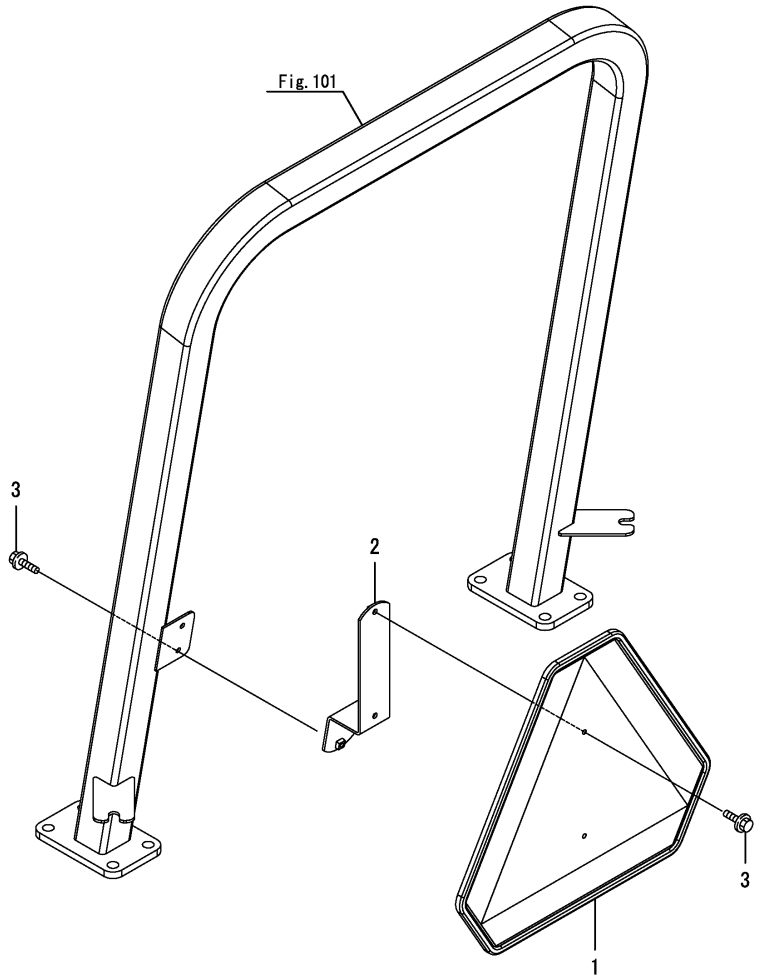

(A)=SC2400(CCY) (D)=
(B)= (E)=
(C)= (F)=

No.	Lev.	Parts No.	Description	Q'ty (A)	(B)	(C)	(D)	(E)	(F)	I	R
1	1	1A8160-65800	EMBLEM, SMV	1							
2	1	1A7880-85610	STAY,SMV CMP	1							
2-1	1	1A7880-85611	STAY ASSY, SMV	1						R	
	(A=FZZZZZ)										
3	1	26106-060162	BOLT, M6X 16 PLATED	4							

N:Old $\xleftrightarrow[\text{No}]{\text{Yes}}$ New, Q:Old $\xleftrightarrow[\text{Yes}]{\text{No}}$ New, R:Old $\xleftrightarrow[\text{Yes}]{\text{Yes}}$ New, S:Old $\xleftrightarrow[\text{No}]{\text{No}}$ New, W:Add, Z:Discontinued, F:Interchangeable by set, K:Q'ty Change

Copyright (C) YANMAR CO., LTD. All RightsReserved.

Fig.104. FRONT WEIGHT

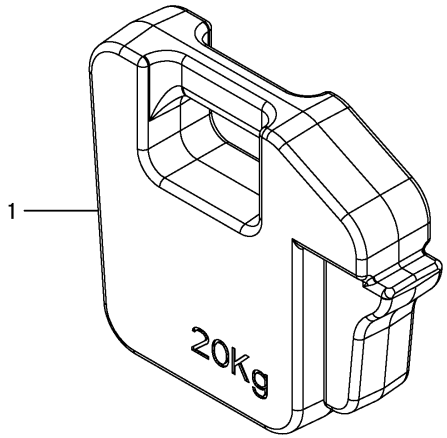

(A)=SC2400(CCY) (D)=
(B)= (E)=
(C)= (F)=

No.	Lev.	Parts No.	Description	Q'ty (A)	(B)	(C)	(D)	(E)	(F)	I	R
1	1	1A8160-91000	WEIGHT, FRONT 20KG	1							

N:Old ←Yes/No→ New, Q:Old ←No/Yes→ New, R:Old ←Yes/Yes→ New, S:Old ←No/No→ New, W:Add, Z:Discontinued, F:Interchangeable by set, K:Q'ty Change

Copyright (C) YANMAR CO., LTD. All RightsReserved.

Fig.105. FRONT HITCH

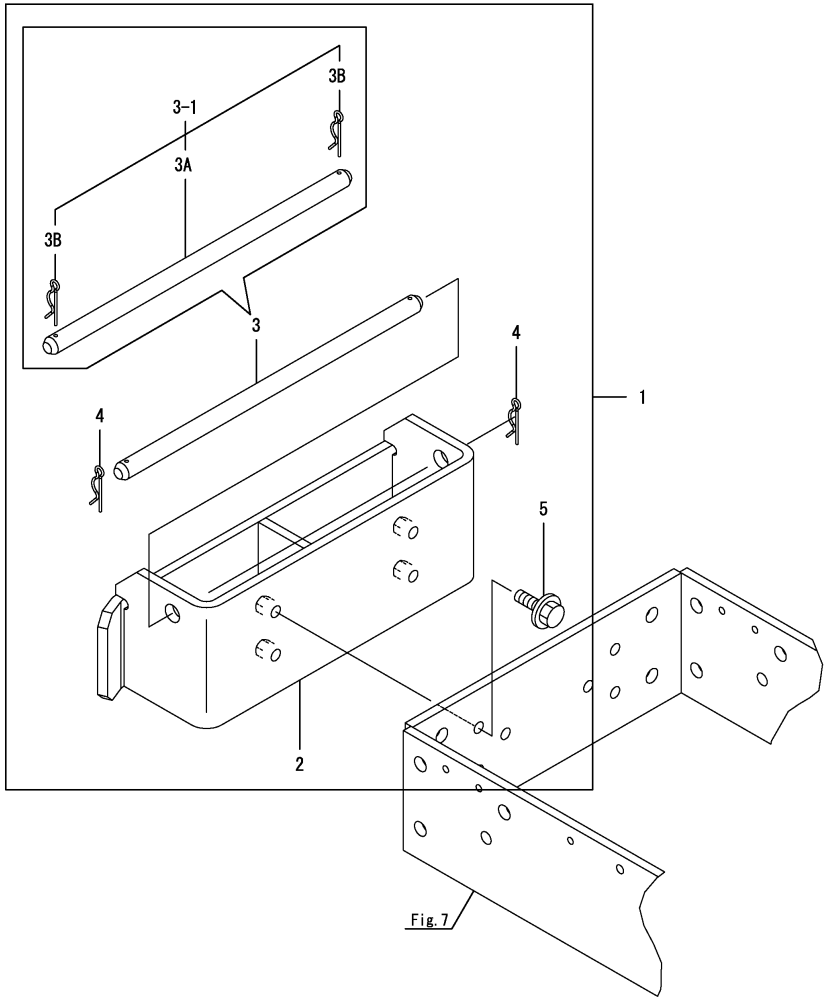

(A)=SC2400(CCY) (D)=
(B)= (E)=
(C)= (F)=

No.	Lev.	Parts No.	Description	Q'ty (A)	(B)	(C)	(D)	(E)	(F)	I	R
1	1	1A7880-10650	HITCH KIT, FRONT	1							
2	2	1A7880-10600	HITCH ASSY	1							
3	2	1A7880-10640	PIN	1							
3-1	2	1A8300-10650	PIN ASSY,WEIGHT LOCK	1						N	
	(A=FXXXXX)										
3A	3	1A7880-10641	PIN	1						W	
	(A=FXXXXX)										
3B	3	22372-160000	PIN, SNAP 16	2						W	
	(A=FXXXXX)										
4	2	22372-160000	PIN, SNAP 16	2						Z	
	(A=FXXXXX)										
5	2	26106-100302	BOLT, M10X 30 PLATED	4							

Remarks
*OPTIONAL PARTS
FWBKT-SC2400
Fig.105 IS INCORPORATED
IN THIS KIT.

N:Old $\xleftarrow[\text{No}]{\text{Yes}}$ New, Q:Old $\xleftarrow[\text{Yes}]{\text{No}}$ New, R:Old $\xleftarrow[\text{Yes}]{\text{Yes}}$ New, S:Old $\xleftarrow[\text{No}]{\text{No}}$ New, W:Add, Z:Discontinued, F:Interchangeable by set, K:Q'ty Change

Copyright (C) YANMAR CO., LTD. All RightsReserved.

Fig.107. WORK LAMP

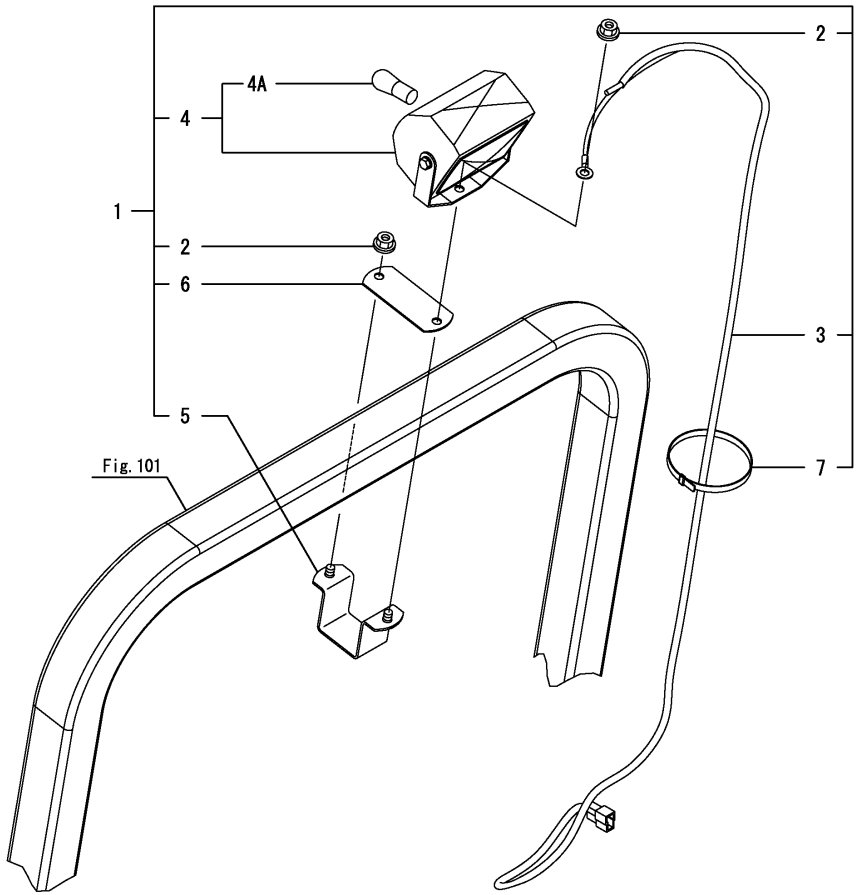

(A)=SC2400(CCY) (D)=
(B)= (E)=
(C)= (F)=

No.	Lev.	Parts No.	Description	Q'ty (A)	(B)	(C)	(D)	(E)	(F)	I	R
1	1	1A7880-54010	LAMP KIT, WORKING	1							
2	2	194990-22140	NUT, M8	2							
3	2	1A7880-51300	CABLE, WORK LAMP	1							
4	2	194640-54100	LAMP ASSY, WORKING	1							
4A	3	194640-54170	BULB, 12V/18.4W	1							
5	2	1A7880-58200	STAY, WORK LAMP A	1							
6	2	1A7880-58250	STAY, WORK LAMP B	1							
7	2	29622-250001	BAND, RF250	3							
7-1	2	1A8300-51210	BAND, REPEAT	3						R	

(A=FXXXXX)

N:Old $\xleftrightarrow[\text{No}]{\text{Yes}}$ New, Q:Old $\xleftrightarrow[\text{Yes}]{\text{No}}$ New, R:Old $\xleftrightarrow[\text{Yes}]{\text{Yes}}$ New, S:Old $\xleftrightarrow[\text{No}]{\text{No}}$ New, W:Add, Z:Discontinued, F:Interchangeable by set, K:Q'ty Change

Copyright (C) YANMAR CO., LTD. All RightsReserved.

Fig.108. HEATER(RADIATOR

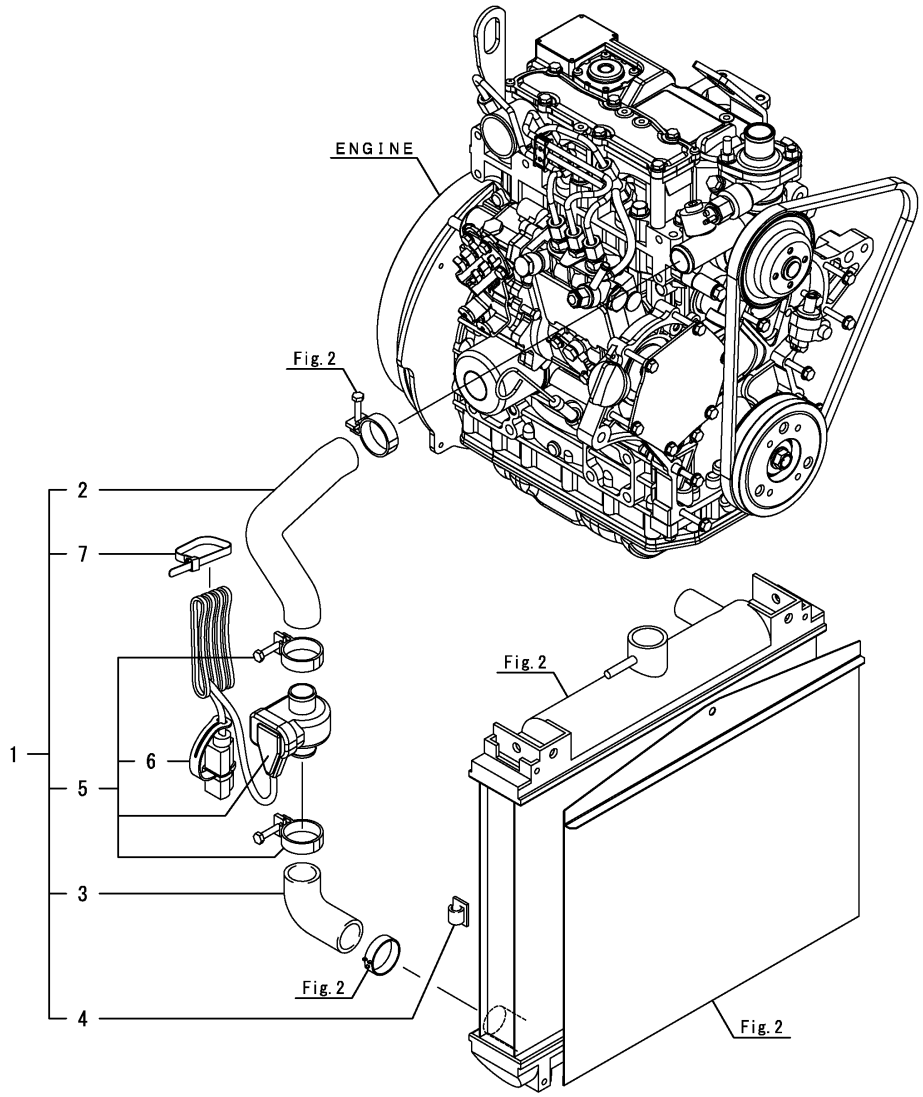

(A)=SC2400(CCY) (D)=
(B)= (E)=
(C)= (F)=

No.	Lev.	Parts No.	Description	Q'ty (A)	(B)	(C)	(D)	(E)	(F)	I	R
1	1	1A7880-57200	HEATER KIT	1							
2	2	1A7880-01480	HOSE, WATER U	1							
3	2	1A7880-01490	HOSE, WATER L	1							
4	2	172010-07810	STICKER, WIRE	1							
5	2	1A7880-57250	HEATER	1							
6	3	1A7880-57260	PROTECTOR, PLUG	1							
7	2	29622-250001	BAND, RF250	1							
7-1	2	1A8300-51210	BAND, REPEAT	1						R	
	(A=FXXXXX)										

N:Old $\xleftrightarrow[\text{No}]{\text{Yes}}$ New, Q:Old $\xleftrightarrow[\text{Yes}]{\text{No}}$ New, R:Old $\xleftrightarrow[\text{Yes}]{\text{Yes}}$ New, S:Old $\xleftrightarrow[\text{No}]{\text{No}}$ New, W:Add, Z:Discontinued, F:Interchangeable by set, K:Q'ty Change

Copyright (C) YANMAR CO., LTD. All RightsReserved.

Fig.109. CABLE ASSY, BRAKE SW

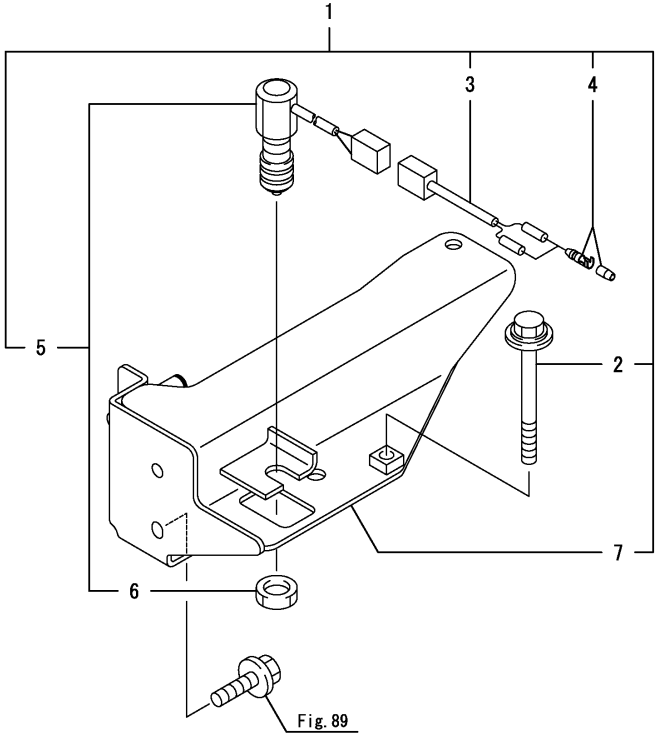

(A)=SC2400(CCY) (D)=
(B)= (E)=
(C)= (F)=

No.	Lev.	Parts No.	Description	Q'ty (A)	(B)	(C)	(D)	(E)	(F)	I	R
1	1	1A7880-51250	SWITCH KIT, BRAKE	1							
2	2	1A7880-29491	BOLT, PEDAL	1							
3	2	1A7880-51260	CABLE, BRAKE SWITCH	1							
4	2	1A7880-51270	TERMINAL, BULLET	2							
5	2	198223-52150	SWITCH, STOP LAMP	1							
6	3	26776-120002	NUT, LOCK M12	1							
7	2	1A7880-62601	STAY ASSY, STEP RF	1							

N:Old $\overset{\text{Yes}}{\underset{\text{No}}{\leftrightarrows}}$ New, Q:Old $\overset{\text{No}}{\underset{\text{Yes}}{\leftrightarrows}}$ New, R:Old $\overset{\text{Yes}}{\underset{\text{Yes}}{\leftrightarrows}}$ New, S:Old $\overset{\text{No}}{\underset{\text{No}}{\leftrightarrows}}$ New, W:Add, Z:Discontinued, F:Interchangeable by set, K:Q'ty Change

Copyright (C) YANMAR CO., LTD. All RightsReserved.

Fig.117. SERVICE PARTS

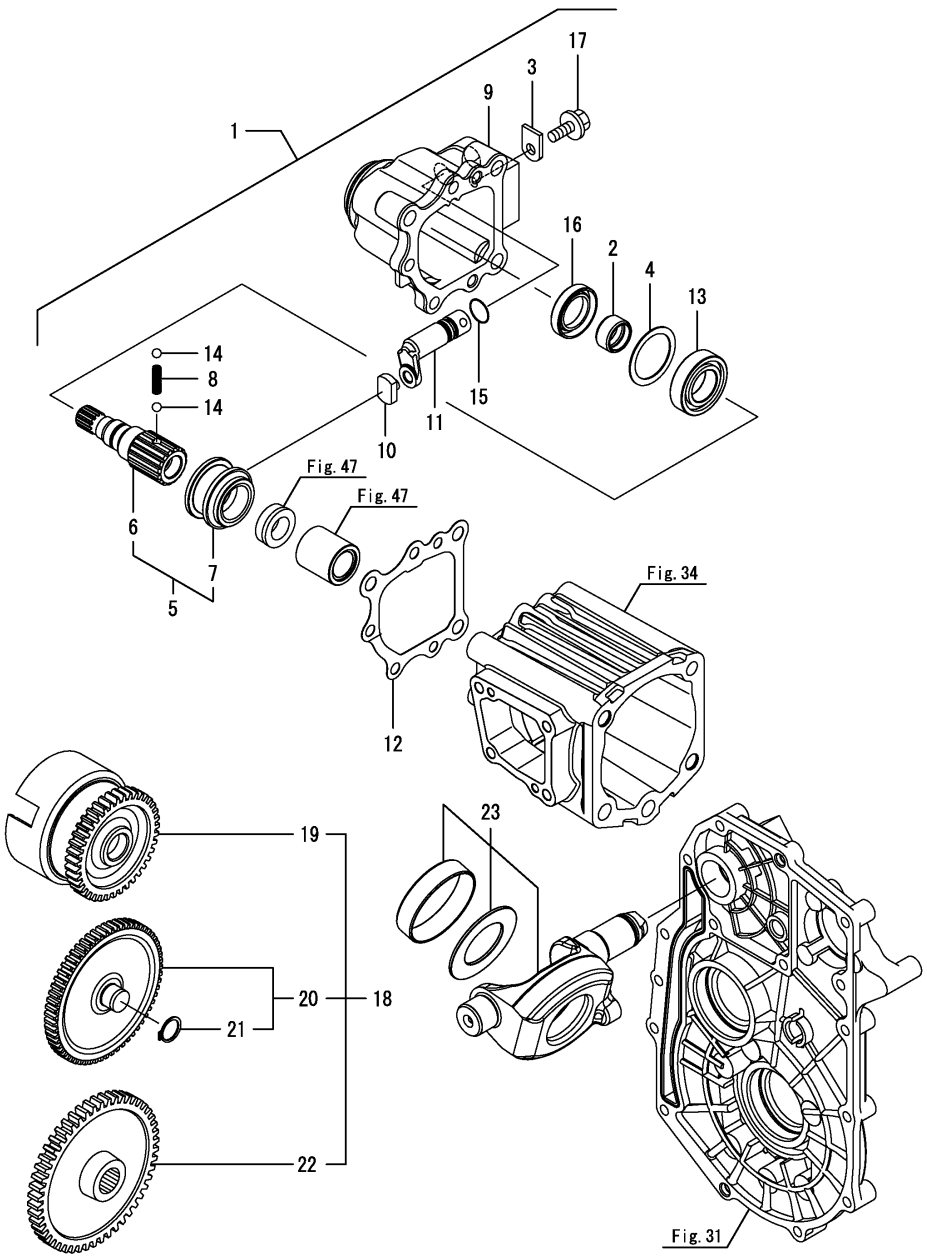

(A)=SC2400(CCY) (D)=
(B)= (E)=
(C)= (F)=

No.	Lev.	Parts No.	Description	Q'ty (A)	(B)	(C)	(D)	(E)	(F)	I	R
1	1	187K06-99100	FRONT DRIVE KIT	1							
2	2	194855-25290	SLEEVE, SI 202513	1							
3	2	194197-27681	PLATE, KEEP	1							
4	2	1A7050-28110	WASHER, 36X46X1	1							
5	2	1A7050-28200	F.DRIVE SHAFT SET	1							
6	3	1A7050-28211	SHAFT, FRONT DRIVE	1							
7	3	198165-28240	COLLAR, SHIFT	1							
8	2	194311-28230	SPRING, 21.2	1							
9	2	1A7050-28250	COVER, FRONT	1							
10	2	1A7050-28331	BLOCK, SHIFT	1							
11	2	1A7050-28351	SHAFT, SHIFT 4WD	1							
12	2	1A7050-28560	PACKING, FRONT COVER	1							
13	2	24101-060054	BEARING, BALL 6005	1							
14	2	24190-080001	BALL, STEEL 1/4	2							
15	2	24311-000125	O-RING, 1AP12.5	1							
16	2	24421-254008	SEAL, OIL TC254008	1							
17	2	26106-080162	BOLT, M8X 16 PLATED	1							
18	1	187K08-26110	PTO GEAR KIT	1							
19	2	187K08-26140	GEAR, CLUTCH 39T	1							
20	2	187K08-26340	IDLE ASSY, PTO	1							
21	3	22242-000200	RING, 20	1							
22	2	187K08-26370	GEAR,62T MID PTO	1							
23	1	1A7050-27110	SHIFT ASSY	1							

N:Old $\xleftarrow[\text{No}]{\text{Yes}}$ New, Q:Old $\xleftarrow[\text{Yes}]{\text{No}}$ New, R:Old $\xleftarrow[\text{Yes}]{\text{Yes}}$ New, S:Old $\xleftarrow[\text{No}]{\text{No}}$ New, W:Add, Z:Discontinued, F:Interchangeable by set, K:Q'ty Change

Copyright (C) YANMAR CO., LTD. All RightsReserved.

Fig.118. FUEL LINE(FAME

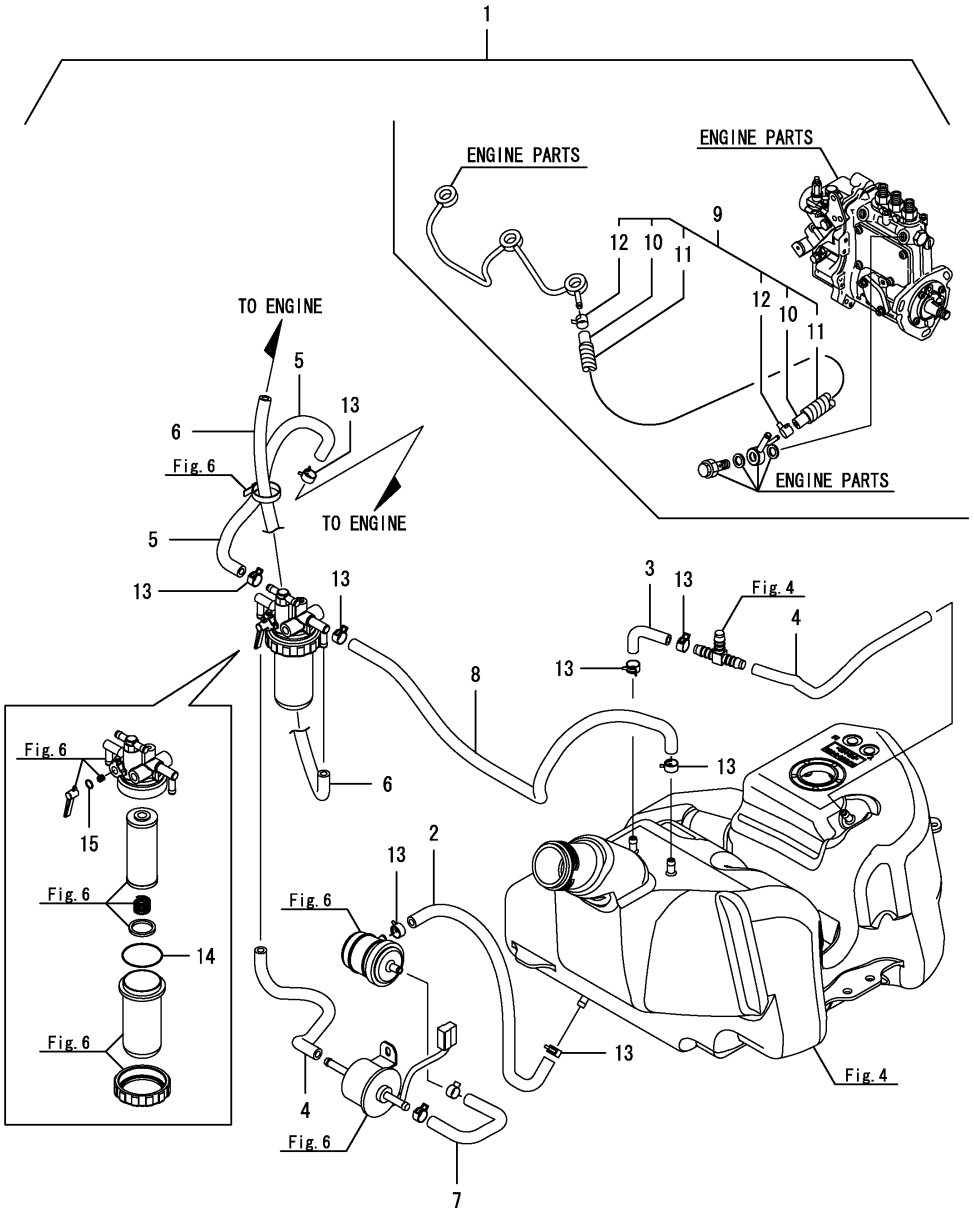

(A)=SC2400(CCY) (D)=
(B)= (E)=
(C)= (F)=

No.	Lev.	Parts No.	Description	Q'ty (A)	(B)	(C)	(D)	(E)	(F)	I	R
1	1	1A7880-04250	HOSE KIT , FUEL	1							
2	2	1A7510-04580	HOSE, FUEL 40X290	1							
3	2	1A8160-04270	HOSE, RETURN	1							
4	2	1A8160-04500	HOSE, FUEL 270	2							
5	2	1A7880-04510	HOSE, FUEL	1							
6	2	1A8160-04510	HOSE, FUEL 330	1							
7	2	1A7880-04520	HOSE, FUEL 150	1							
8	2	1A7880-04530	HOSE, FUEL	1							
9	2	119546-59300	PIPE ASSY, FUEL	1							
10	3	119416-59510	PIPE, FUEL RETURN	1							
11	3	119546-59700	PROTECTOR,PIPE 13.2	1							
12	3	124060-77680	CLIP, HOSE 10	2							
13	2	23080-012000	CLAMP, 12	8							
13-1	2	114270-59010	CLIP, HOSE 12	8						R	
	(A=FXXXXX)										
14	2	24316-000440	O-RING, 4DP44.0	1							
15	2	24316-240100	O-RING, 4DP10A	1							

N:Old $\frac{\text{Yes}}{\text{No}}$ New, Q:Old $\frac{\text{No}}{\text{Yes}}$ New, R:Old $\frac{\text{Yes}}{\text{Yes}}$ New, S:Old $\frac{\text{No}}{\text{No}}$ New, W:Add, Z:Discontinued, F:Interchangeable by set, K:Q'ty Change

Copyright (C) YANMAR CO., LTD. All RightsReserved.

Fig.106. MANUAL,OPERATOR

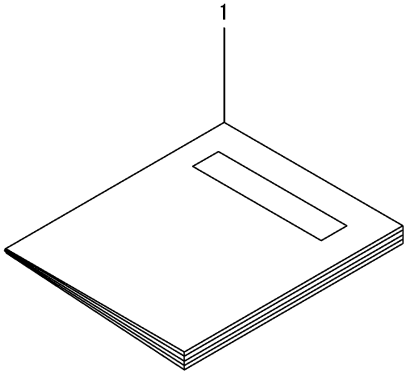

(A)=SC2400(CCY) (D)=
(B)= (E)=
(C)= (F)=

No.	Lev.	Parts No.	Description	Q'ty (A)	(B)	(C)	(D)	(E)	(F)	I	R
1	1	0A041-U00200	OPERATION MANUAL	1							
1-1	1	0A041-U00201	OPERATION MANUAL	1						N	
	(A=FXXXXX)										
1-2	1	0A041-U00202	OPERATION MANUAL	1						N	
	(A=F002763)										
1-3	1	0A041-U00203	OPERATION MANUAL	1						S	
	(A=F020101)										
1-4	1	0A041-U00204	OPERATION MANUAL	1						S	
	(A=FZZZZZ)										

N:Old $\xleftrightarrow[\text{No}]{\text{Yes}}$ New, Q:Old $\xleftrightarrow[\text{Yes}]{\text{No}}$ New, R:Old $\xleftrightarrow[\text{Yes}]{\text{Yes}}$ New, S:Old $\xleftrightarrow[\text{No}]{\text{No}}$ New, W:Add, Z:Discontinued, F:Interchangeable by set, K:Q'ty Change

Copyright (C) YANMAR CO., LTD. All RightsReserved.

Parts No. Index

Parts No.	Fig. No.	Ref. No.
0A041-U00200	106	1
0A041-U00201	106	1 -1
0A041-U00202	106	1 -2
0A041-U00203	106	1 -3
0A041-U00204	106	1 -4
102103-55520	6	11
	112	12
104200-55330	6	8
	112	9
104200-55750	6	16
	112	17
105027-12580	1	6
110250-55610	6	12
	112	13
114110-07760	94	14
114270-59010	2	37
	4	2 B
		2 D-1
	6	28
		29
		32
		33 -1
		34
	110	36
	112	20
		21
		22
		23
		25 -1
	118	13 -1
119225-52102	6	6
	112	7
119255-44660	2	32
	110	30
119416-59510	118	10
119515-12520	1	2
119517-12510	1	1
119546-59300	118	9
119546-59700	118	11
119629-59910	4	2 C
119655-12560	1	2 -1
119686-12570	1	5
119808-12540	1	4
119810-55340	6	9
	112	10
119810-55650	6	13
	112	14
121257-55720	6	14
	112	15
121257-55731	6	15

Parts No.	Fig. No.	Ref. No.
121257-55731	112	16
121267-49500	2	33
	110	31
121450-44531	2	8
	110	8
121470-44581	2	10
	110	10
124060-77680	118	12
124450-44560	2	9
	110	9
124764-44810	2	11
129052-13550	2	27
	110	26
129052-55630	6	18
	112	19
129053-55620	6	7
	112	8
129107-44590	2	4
	110	3
129107-55510	6	10
	112	11
129211-77920	79	16
	116	14
129418-12530	1	3
1684Q3-01430	40	23
168H60-29390	34	8
168H60-29400	34	9
168H60-29411	34	10
168H60-29840	34	2 C
168H61-29260	33	18
168HK0-29351	33	19
168HK0-29600	98	2
168HK0-29610	98	3
168HK0-29620	34	13
168HK0-29690	98	9
172010-07810	108	4
172122-46590	72	4
172524-06850	45	1
172531-17300	80	1
175022-49730	2	34
	110	32
178080-06200	34	1
187K06-24500	33	2
187K06-24540	34	2
187K06-24550	34	21
187K06-24570	34	4
187K06-24600	34	5
187K06-25020	98	1
187K06-25170	36	1
187K06-26400	40	1

Parts No.	Fig. No.	Ref. No.
187K06-26710	31	22
187K06-26740	31	23
187K06-29390	40	18
187K06-29460	34	12
187K06-29620	53	3
187K06-29860	53	4
187K06-29870	53	5
187K06-29880	53	6
187K06-29890	40	19
	53	2
187K06-29900	53	7
187K06-36340	64	3
187K06-36341	64	3 -1
187K06-36350	64	5
187K06-40010	33	20
187K06-99100	117	1
187K08-26110	117	18
187K08-26140	117	19
187K08-26340	117	20
187K08-26370	117	22
192154-24670	33	11
		20 A
192154-29640	45	10
192154-29700	45	11
192157-24170	30	1
192157-24192	31	11
192157-24200	31	12
	42	2
192157-24220	31	13
192157-24450	31	15
192157-24560	34	3
192157-24620	43	2
192157-24801	31	21
192157-24850	34	6
192157-26100	37	2
192157-26111	37	3
192157-26120	37	4
192157-26130	37	5
192157-26140	37	6
192157-26150	37	7
192157-26160	37	8
192157-26170	37	9
192157-26180	38	2
192157-26220	38	4
192157-26270	37	10
192157-26300	37	11
192157-26330	37	12
192157-26340	39	2
192157-26350	37	13
192157-26380	39	7

Parts No.	Fig. No.	Ref. No.
192157-26460	40	7
192157-26470	40	8
192157-26520	40	13
192157-26600	41	2
192157-26611	41	1
192157-26641	41	3
192157-26740	40	16
192157-26810	31	24
192157-26821	31	25
192157-26840	42	6
192157-26860	42	7
192157-26960	42	9
192157-26980	42	10
192157-26991	42	11
192157-27090	31	19
192157-27510	45	3
192157-27520	45	4
192157-27550	45	6
192157-27740	42	13
192157-32360	56	3
192157-32370	56	4
192157-33101	57	1
192157-33110	57	9
192157-34130	59	5
192157-36300	64	1
192157-40180	33	16
		20 B
192157-99010	42	15
192157-99020	42	16
192157-99040	42	17
192159-27700	41	5
192159-27780	41	12
192159-27790	41	10
192159-31410	42	14
192163-24420	33	1
192167-25310	53	1
194065-27270	31	26
	34	2 B
194105-26430	16	9
194130-44480	68	2
194145-04810	65	26
194145-22430	6	35
	86	24
194145-27450	42	18
194145-61570	73	14
194151-36670	16	11
194151-63240	92	4
194151-63250	92	5
194197-27681	42	12
	49	1

Parts No. Index

Parts No.	Fig. No.	Ref. No.
194197-27681	117	3
194200-25270	37	1
	39	1
	42	3
194205-63550	6	30
	112	24
194208-47530	73	1
194300-37570	88	1
	92	2
194311-28230	47	6
	117	8
194312-39480	6	27
	112	6
194330-62530	65	17
194420-61640	82	6
	84	22
		23
194440-11880	59	1
194440-51620	80	7
	92	21
194440-51630	28	29
194454-25770	42	4
194454-25870	42	5
194464-22160	42	1
194464-48850	28	17
194550-27030	52	1
194555-25880	55	1
194555-65130	84	26
194640-54100	107	4
194640-54170	107	4 A
194680-51670	2	35
	77	22
		23
		39
	110	33
	115	19
		20
		21
194680-78350	77	36
	115	23
194730-57242	10	3
194740-00160	3	1
	73	2
	111	1
194850-49290	31	27
	76	17
194854-33110	57	14
194855-24020	31	2
194855-25290	47	1
	117	2

Parts No.	Fig. No.	Ref. No.
194859-24252	31	14
194940-65590	84	27
194951-14440	16	6
194990-20170	50	2 A
194990-22130	2	28
	77	1
		2
		37
	78	1
	79	22
	81	1
	84	1
		2
		3
	86	22
	110	27
	115	1
		2
	116	1
194990-22140	2	29
		30
	5	2
	8	5
	25	7
		8
	44	2
	50	24
	52	3 -1
	72	1
		2
	73	3
	75	1
	77	3
	86	1
	92	1
	107	2
	110	28
		29
	113	4
	114	7
		8
	115	3
194990-85561	72	11
198071-01160	3	5
	111	5
198071-58810	25	21
	114	11
198071-61890	2	38
		39
	25	11

Parts No.	Fig. No.	Ref. No.
198071-61890	25	12
	79	15
	84	25
	86	11
		12
		18
		19
		19 -1
	110	38
		39
	114	13
		14
	116	13
198071-65610	84	28
198072-04320	6	20
	112	2
198093-84810	25	23
	74	7
		7 -1
	114	15
198133-78840	80	4
198153-51700	115	16
198162-00720	2	5
	110	5
198162-47630	46	2
198162-61370	2	56
	110	37
198162-62630	90	5
198164-27970	72	3
198165-04380	4	2 A
198165-11500	9	1
198165-24440	16	7
198165-24490	16	8
198165-28220	47	5
198165-28240	47	4
	117	7
198165-47750	88	2
198165-85970	101	1 -1
198167-24530	45	2
198167-24950	31	5
198200-01260	3	7 -1
	111	7 -1
198200-27810	44	3
198200-27811	44	3 -1
198200-27910	46	1
198200-27911	46	1 -1
198200-47810	73	4
198200-56630	4	7
		9 F
198220-52180	79	10

Parts No.	Fig. No.	Ref. No.
198220-52180	116	2
198220-65621	93	5
198223-46250	76	1
198223-52150	79	11 -1
	109	5
	116	3
198234-72550	99	19
198240-48830	28	16
198240-48850	28	18
198253-01190	3	6
	111	6
198273-28520	48	1
	66	1
198273-28521	48	1 -1
	66	1 -1
198284-63270	92	5 -1
198327-26560	59	2
198360-03260	90	1
198360-03270	90	2
198448-04270	4	8
198448-56150	83	3
198461-60590	86	15
		20
		20 -2
198461-87590	2	40
	110	40
198475-37690	66	5
198535-52110	77	13
	115	10
198535-52120	77	14
	115	11
198535-52130	77	15
	115	12
1A1380-55310	2	54
	77	29
	110	34
	115	22
1A6150-76740	86	13
		16
1A6240-51630	77	11
	115	8
1A6260-41250	73	5
1A6370-31000	40	3
1A6380-25370	74	1
1A6382-96650	116	20
1A6680-56920	2	36
	110	35
1A6750-29850	53	14
1A6770-85920	7	5
	102	7

Parts No. Index

Parts No.	Fig. No.	Ref. No.
1A6780-13910	54	1
1A6780-51410	77	20
	115	17
1A6780-57200	79	14
	116	12
1A7050-24101	31	3
1A7050-24130	31	7
1A7050-24150	31	8
1A7050-24610	43	1
1A7050-24950	35	1
1A7050-24990	33	3
1A7050-25181	36	2
1A7050-26080	38	1
1A7050-26210	38	3
1A7050-26360	39	6
1A7050-27110	117	23
1A7050-27530	45	5
1A7050-27600	45	7
1A7050-27610	45	8
1A7050-27620	45	9
1A7050-28110	47	2
	117	4
1A7050-28200	117	5
1A7050-28211	47	3
	117	6
1A7050-28250	47	7
	117	9
1A7050-28260	47	8
1A7050-28331	49	2
	117	10
1A7050-28351	49	3
	117	11
1A7050-28560	47	9
	117	12
1A7050-31100	54	2
1A7050-32320	56	1
1A7050-33390	55	2
1A7050-33460	55	3
1A7050-34110	59	3
1A7050-34120	59	4
1A7051-32320	56	2
1A7052-26890	42	8
1A7070-47400	73	13
1A7130-11790	8	4
	113	3
1A7130-13120	11	1
1A7130-13130	11	2
1A7130-13270	15	3
1A7130-29420	34	11
1A7130-36330	64	2

Parts No.	Fig. No.	Ref. No.
1A7180-04180	4	9 -1
		9 -2
		9 D
1A7335-17520	27	1 B-1
1A7335-52120	80	12
1A7335-53600	81	9
1A7335-53610	81	10
1A7335-53620	81	11
1A7335-53630	81	12
1A7335-53640	81	13
1A7335-53650	81	14
1A7335-71250	99	5
1A7340-65080	96	1
1A7450-52180	77	16
	115	13
1A7500-13360	13	7
1A7500-51130	77	6
	115	5
1A7500-51160	77	8
	115	7
1A7500-51810	28	26
1A7500-71120	99	9
1A7500-71130	99	10
1A7510-04430	2	22
	6	3
	110	21
	112	4
1A7510-04580	118	2
1A7510-36490	65	27
1A7510-47760	88	3
1A7510-56110	83	2
1A7531-52420	77	18
	115	14
1A7790-01160	50	1
	58	1
1A7870-52950	116	5
1A7880-00600	2	1
1A7880-00601	2	1 -1
	110	1
1A7880-00610	2	2
	110	2
1A7880-00630	2	3
1A7880-00640	2	58
	110	4
1A7880-01010	3	3 -1
	111	3 -1
1A7880-01060	3	2
	111	2
1A7880-01110	3	3
	111	3

Parts No.	Fig. No.	Ref. No.
1A7880-01150	3	4
1A7880-01350	2	6
	110	6
1A7880-01360	2	7
	110	7
1A7880-01410	2	13
	110	13
1A7880-01440	2	14
	110	14
1A7880-01460	2	15
	110	15
1A7880-01480	108	2
1A7880-01490	108	3
1A7880-01500	2	16
	110	16
1A7880-01520	2	19
	110	17
1A7880-01560	2	20
	110	18
1A7880-01650	2	31
	110	19
1A7880-03110	2	21
1A7880-03111	2	21 -1
	110	20
1A7880-04040	4	2 F
1A7880-04050	4	5
1A7880-04080	4	3
1A7880-04091	4	1
		9 B
1A7880-04100	4	2
1A7880-04101	4	2 -1
1A7880-04110	4	4
1A7880-04111	4	9 C
1A7880-04130	4	9 A
1A7880-04210	4	10
1A7880-04250	118	1
1A7880-04270	6	26
	112	1
1A7880-04300	5	1
1A7880-04301	5	1 -1
1A7880-04410	6	2
1A7880-04430	6	4
	112	5
1A7880-04510	118	5
1A7880-04520	118	7
1A7880-04530	118	8
1A7880-05110	119	1
1A7880-05150	25	1
1A7880-05190	25	2
	114	2

Parts No.	Fig. No.	Ref. No.
1A7880-05410	2	23
1A7880-06010	2	24
1A7880-06150	2	25
	110	24
1A7880-06200	2	26
1A7880-06201	2	26 -1
	110	25
1A7880-10040	7	12
1A7880-10090	7	1
1A7880-10410	7	10
	77	30
1A7880-10430	7	11
1A7880-10500	7	4
1A7880-10600	105	2
1A7880-10640	105	3
1A7880-10641	105	3 A
1A7880-10650	105	1
1A7880-10800	8	1
1A7880-10900	8	2
1A7880-10950	8	3
1A7880-11090	7	1 -1
1A7880-11510	9	2
1A7880-11540	15	2
1A7880-11550	9	3
1A7880-11551	9	3 -1
1A7880-11560	9	6
1A7880-12301	10	1
1A7880-12302	10	1 -1
1A7880-13150	12	1
1A7880-13310	13	1
1A7880-13410	13	2
1A7880-13411	13	2 -1
1A7880-13470	13	2 -2
1A7880-13480	13	11
1A7880-13510	14	1
1A7880-13520	14	2
1A7880-13530	14	3
1A7880-13540	17	1
1A7880-13600	15	1
1A7880-13710	16	1
1A7880-13720	16	2
1A7880-13721	16	2 -1
1A7880-13730	16	3
1A7880-13740	16	4
1A7880-13770	16	15
1A7880-13780	16	5
1A7880-13810	17	2
1A7880-13820	17	3
1A7880-14110	18	1
1A7880-14120	18	2

Parts No. Index

Parts No.	Fig. No.	Ref. No.
1A7880-14130	18	3
1A7880-14620	19	1
1A7880-14700	21	1
1A7880-14710	21	2
1A7880-14800	22	1
1A7880-14810	22	5
1A7880-14820	22	2
		6
1A7880-14830	20	2
		6
	21	3
	22	3
		7
1A7880-14840	20	3
		7
	21	4
	22	4
		8
	60	2
		6
	61	2
	62	2
		6
1A7880-14900	20	1
1A7880-14910	20	5
1A7880-14920	20	4
		8
1A7880-15060	28	1
1A7880-15100	25	3 -1
	114	3
1A7880-15110	25	3
1A7880-15120	25	4
	114	4
1A7880-15130	25	5
	114	5
1A7880-15160	25	6
	114	6
1A7880-15700	24	1
1A7880-15740	24	2
1A7880-15780	94	1
1A7880-17010	27	1
1A7880-17011	27	1 -1
1A7880-17050	27	1 A
1A7880-17060	27	1 B
1A7880-17070	27	1 C
1A7880-17080	27	1 D
1A7880-17100	27	1 E
1A7880-17101	27	1 E-1
1A7880-17300	26	1
1A7880-17320	26	1 B

Parts No.	Fig. No.	Ref. No.
1A7880-17350	85	1
1A7880-17600	28	2
1A7880-17601	28	2 -1
1A7880-17630	28	3
1A7880-17650	28	4
1A7880-17651	28	4 -1
1A7880-17680	28	5
1A7880-17700	28	6
1A7880-17701	28	6 -1
1A7880-17750	28	7
1A7880-17751	28	7 -1
1A7880-17810	28	8
1A7880-17830	28	9
1A7880-17930	28	10
1A7880-17940	28	11
1A7880-17970	28	28
1A7880-17980	28	12
1A7880-21100	29	1
1A7880-21500	32	1
1A7880-27500	44	4
1A7880-27560	44	5
1A7880-27561	44	5 -1
1A7880-27580	44	6
1A7880-27800	46	3
1A7880-27850	46	4
1A7880-28300	48	2
1A7880-29400	50	2
1A7880-29410	50	2 B
1A7880-29430	50	2 C
1A7880-29450	50	25
1A7880-29451	50	25 -1
1A7880-29490	50	26
1A7880-29491	50	26 -1
	109	2
1A7880-29500	50	3
1A7880-29540	50	4
1A7880-29541	50	4 -1
1A7880-29570	50	5
1A7880-29600	50	6
1A7880-29610	50	2 D
1A7880-29640	50	7
1A7880-29720	50	8
1A7880-29780	50	9
1A7880-29800	51	1
1A7880-29801	51	1 -1
1A7880-29830	51	2
1A7880-29840	51	3
1A7880-29870	51	4
1A7880-29871	51	4 -1
1A7880-29872	51	4 -2

Parts No.	Fig. No.	Ref. No.
1A7880-29900	52	2
1A7880-29901	52	2 -1
1A7880-33200	58	2
1A7880-33250	58	3
1A7880-34180	23	1
	63	1
1A7880-34700	61	1
1A7880-34710	61	3
1A7880-34800	62	1
1A7880-34810	62	5
1A7880-34820	62	3
		7
1A7880-34830	60	3
		7
	61	4
	62	4
		8
1A7880-34900	60	1
1A7880-34910	60	5
1A7880-34920	60	4
		8
1A7880-37100	65	1
1A7880-37150	65	2
1A7880-37200	65	3
1A7880-37220	65	4
1A7880-37250	65	5
1A7880-37310	65	6
1A7880-37350	65	7
1A7880-37390	65	8
1A7880-37400	65	9
1A7880-37440	65	10
1A7880-37441	65	10 -1
1A7880-37450	65	11
1A7880-37490	66	2
1A7880-43100	67	1
1A7880-43200	67	2
1A7880-43300	67	3
1A7880-43350	67	4
1A7880-43370	67	5
1A7880-43390	67	6
1A7880-43400	67	7
1A7880-43460	67	8
1A7880-43470	67	9
1A7880-43480	67	10
1A7880-44400	68	1
1A7880-44700	68	3
1A7880-44740	67	12
1A7880-45000	73	6
1A7880-45040	73	7
1A7880-45100	69	1

Parts No.	Fig. No.	Ref. No.
1A7880-45150	28	13
1A7880-45210	73	8
1A7880-45250	73	9
1A7880-45330	73	10
1A7880-45331	73	10 -1
1A7880-45530	69	5
1A7880-45540	69	6
1A7880-45560	69	7
1A7880-45610	69	9
1A7880-45620	69	10
1A7880-45640	69	11
1A7880-45650	69	12
1A7880-45660	69	13
1A7880-45700	69	14
1A7880-45800	69	21
1A7880-45830	69	31
1A7880-47100	71	1
1A7880-47120	71	2
1A7880-47121	71	2 -1
1A7880-47150	76	2
1A7880-47200	76	3
1A7880-47300	76	6
1A7880-47301	76	6 -1
1A7880-47350	76	7
1A7880-47351	76	7 -1
1A7880-47400	76	8
1A7880-47401	76	8 -1
1A7880-47450	76	9
1A7880-47451	76	9 -1
1A7880-47500	76	10
1A7880-47501	76	10 -1
1A7880-47510	28	14
	76	11
1A7880-47520	76	4
1A7880-47530	28	15
	76	12
1A7880-47540	76	5
1A7880-47550	76	13
1A7880-47560	76	14
1A7880-47570	76	15
1A7880-47580	76	16
1A7880-47600	72	5
1A7880-47650	72	6
1A7880-47651	72	6 -1
1A7880-47700	72	7
1A7880-47701	72	7 -1
1A7880-47750	72	8
1A7880-47770	71	3
1A7880-47850	71	7
1A7880-47851	71	7 -1

Parts No. Index

Parts No.	Fig. No.	Ref. No.
1A7880-47950	72	9
1A7880-48100	74	2
1A7880-48101	74	2 -1
1A7880-48160	74	3
1A7880-51101	77	4
1A7880-51102	77	4 -1
1A7880-51103	77	4 -2
1A7880-51250	109	1
1A7880-51260	109	3
1A7880-51270	109	4
1A7880-51300	107	3
1A7880-51420	77	21
	115	18
1A7880-51710	25	9
	114	10
1A7880-51730	77	12
	115	9
1A7880-51800	77	35
1A7880-52100	80	10
1A7880-52110	80	9
1A7880-52140	80	13
1A7880-52200	79	11
		12
	116	6
1A7880-52210	79	11 A
		12 A
	116	7
1A7880-52250	80	2
1A7880-53050	84	4
1A7880-53070	84	6
1A7880-53080	84	7
1A7880-53100	81	6 -1
1A7880-53300	82	1
1A7880-53310	82	2
1A7880-53320	82	3
1A7880-53400	81	2
1A7880-53410	81	3
1A7880-53420	81	4
1A7880-53430	81	5
1A7880-54010	107	1
1A7880-56010	83	1
1A7880-56600	4	6
1A7880-56601	4	6 -1
		6 -2
		9 E
1A7880-57100	80	6
1A7880-57200	108	1
1A7880-57250	108	5
1A7880-57260	108	6
1A7880-58110	78	6

Parts No.	Fig. No.	Ref. No.
1A7880-58111	78	6 -1
1A7880-58120	78	7
1A7880-58121	78	7 -1
1A7880-58150	86	2
1A7880-58151	86	2 -1
1A7880-58200	107	5
1A7880-58250	107	6
1A7880-60900	84	8
1A7880-60901	84	8 -1
1A7880-60990	84	14
1A7880-61020	84	15
1A7880-61030	84	16
1A7880-61060	82	4
1A7880-61061	82	4 -1
1A7880-61070	82	5
1A7880-61110	84	17
1A7880-61111	84	17 -1
1A7880-61170	84	18
1A7880-61260	84	19
1A7880-61370	84	21
1A7880-61510	86	3
1A7880-61600	86	17
1A7880-61601	86	17 -1
1A7880-61640	86	4
1A7880-61650	86	6
1A7880-61670	86	7
1A7880-61690	86	8
1A7880-61760	84	24
1A7880-61761	84	24 -1
1A7880-61810	25	10
	114	12
1A7880-62100	87	1
1A7880-62240	88	4
1A7880-62300	88	7
1A7880-62500	90	3
1A7880-62510	90	4
1A7880-62550	89	1
1A7880-62600	89	2
1A7880-62601	89	2 -1
	109	7
1A7880-62650	89	3
1A7880-63010	91	2
1A7880-63020	91	2 -2
1A7880-63050	91	2 -1
1A7880-63060	91	2 B
		2 B-1
1A7880-63100	91	3
1A7880-63200	92	3
1A7880-63300	92	6
1A7880-63390	92	7

Parts No.	Fig. No.	Ref. No.
1A7880-63400	92	7 A
1A7880-63410	92	8
1A7880-63420	92	9
1A7880-63450	92	10
1A7880-63451	92	10 -1
1A7880-63500	92	11
1A7880-64710	95	1
1A7880-65330	94	3
1A7880-65331	94	3 -1
1A7880-65340	94	11
1A7880-65341	94	11 -1
1A7880-65350	93	2
1A7880-65351	93	2 -1
1A7880-65370	94	4
1A7880-65380	94	5
1A7880-65390	94	6
1A7880-65410	97	1
1A7880-65411	97	1 -1
1A7880-65510	94	7
1A7880-65511	94	7 -1
1A7880-65560	94	12
1A7880-65570	94	13
1A7880-65580	95	2
1A7880-65590	95	3
1A7880-65600	93	3
1A7880-65601	93	3 -1
1A7880-65610	93	4 -1
1A7880-65620	93	4
1A7880-65630	94	8
1A7880-65720	94	9
1A7880-65721	94	9 -1
1A7880-65780	77	19
	115	15
1A7880-65980	93	6
1A7880-65981	93	6 -1
1A7880-71110	99	2
1A7880-71130	100	1
1A7880-71210	99	3
1A7880-71220	99	4
1A7880-71500	99	6
1A7880-71550	99	11
1A7880-71580	99	7
1A7880-71720	99	12
1A7880-71800	99	1
1A7880-72100	99	13
1A7880-72300	99	18
1A7880-72310	99	14
1A7880-72320	99	15
1A7880-72330	99	16
1A7880-72340	99	17

Parts No.	Fig. No.	Ref. No.
1A7880-73150	99	20
1A7880-73500	99	21
1A7880-74100	99	22
1A7880-74110	99	23
1A7880-74120	99	24
1A7880-74130	99	25
1A7880-74140	99	26
1A7880-74150	99	27
1A7880-74550	99	28
1A7880-85000	101	2
1A7880-85170	93	8
1A7880-85180	93	9
1A7880-85190	93	8 -1
1A7880-85300	102	1
1A7880-85430	102	2
1A7880-85490	102	3
1A7880-85550	102	6
1A7880-85610	103	2
1A7880-85611	103	2 -1
1A7882-01150	111	4
1A7882-05150	114	1
1A7882-05410	110	22
1A7882-06010	110	23
1A7882-10800	113	1
1A7882-10900	113	2
1A7882-51101	115	4
1A7882-85490	102	3 -1
1A7882-85550	102	6 -1
1A8070-61330	84	20
1A8115-63260	92	4 -1
1A8160-04270	118	3
1A8160-04500	118	4
1A8160-04510	118	6
1A8160-11520	101	1
1A8160-46670	70	1
1A8160-51130	77	7
	115	6
1A8160-51550	78	2
1A8160-51570	78	4
1A8160-51580	78	5
1A8160-52300	79	13
	116	9
1A8160-52310	79	13 A
	80	5
	116	10
1A8160-52330	79	11 B
		12 B
		13 B
	116	8
		11

Parts No. Index

Parts No.	Fig. No.	Ref. No.
1A8160-63400	91	4
1A8160-63410	91	5
1A8160-63420	91	6
1A8160-63440	91	7
1A8160-65300	93	1
1A8160-65310	93	7
1A8160-65430	97	2
1A8160-65800	103	1
1A8160-65860	94	10
1A8160-91000	104	1
1A8250-65390	94	15
1A8250-65650	94	14 -1
1A8300-10650	105	3 -1
1A8300-51210	2	55 -1
	6	5 -1
	28	27 -1
	77	32 -1
		33 -1
		34 -2
	80	8 -1
	107	7 -1
	108	7 -1
	110	12
	111	13
	112	33
	115	28
		29
		30
1A8300-63010	91	2 A
		2 A-1
1C6050-31250	16	10
1C6140-47210	25	22
	114	9
1C6281-52310	3	8
	111	8
1C6281-52320	45	12
	50	10
	51	5
		8
	58	4
	65	12
		13
		14
		15
		16
	73	22
	91	1
1C6320-52210	57	6
1C6460-38240	86	5
1C6900-23150	31	1

Parts No.	Fig. No.	Ref. No.
1C6900-48251	3	7
	111	7
1E4760-73240	11	3
1E6150-56040	72	10
1E6460-91573	84	29
1E8420-55430	18	4
1E8450-66390	74	5
1E8600-66700	75	2
1K1140-82500	79	17
		18
	116	15
		16
21731-040002	81	6
22117-080000	84	30
22117-100000	44	7
22137-050000	84	31
22137-060000	3	9
	111	9
22137-080000	2	57
	45	13
	58	7
	65	18
		19
	72	12
		18
	73	15
		16
		17
	84	13
		30 -1
	92	12
	99	29
	110	41
22137-100000	3	10
	57	12
	92	20
	111	10
22137-120000	45	14
	66	6
	73	18
	102	11
22137-130000	81	7
22137-140000	58	5
22137-160000	13	10
	24	3
	99	30
22157-060000	2	41
	81	15
	86	23
		23 -1

Parts No.	Fig. No.	Ref. No.
22157-060000	86	25
		25 -1
	110	42
22157-080000	4	11
	87	2
	88	8
	92	22
22157-100000	44	8
22157-120000	65	20
22190-080002	40	20
22207-012160	54	3
22217-080000	53	16
	92	13
22217-120000	7	6
	9	4
22217-130000	81	8
22217-160000	68	4
22242-000100	44	9
	50	11
22242-000120	50	12
	51	6
	66	7
22242-000160	34	15
	57	7
22242-000200	36	10
	37	14
	39	5
	64	6
	117	21
22242-000220	76	18
22242-000240	11	4
	42	22
22242-000250	37	15
22242-000280	45	15
22242-000290	42	23
22242-000300	44	10
22242-000340	18	5
22242-000350	42	24
22242-000360	13	4
22242-000450	16	12
22242-000500	42	25
22252-000150	13	12
22252-000320	98	10
22252-000420	34	16
22252-000520	11	5
22252-000550	12	2
	14	4
	56	5
22252-000620	42	26
22252-000681	16	13

Parts No.	Fig. No.	Ref. No.
22252-000720	16	14
22252-000800	37	16
22262-000240	36	9
22262-000420	31	28
22272-000080	72	13
	73	19
22272-000100	46	6
22287-100000	47	11
22292-000200	98	11
22312-060100	34	17
22312-080160	47	12
22312-080200	27	2
22312-100120	40	4
	53	23
22312-100200	31	29
22351-035025	31	30
22351-035032	13	5
22351-040025	57	8
22351-050018	73	20
22351-050025	99	8
22351-050040	50	13
22351-060025	31	31
22351-060032	13	6
	48	3
	65	21
22351-060040	65	22
22351-080040	50	14
22351-100020	7	7
22372-080000	46	5
		5 -1
	73	21
	84	32
	99	31
22372-120000	51	7
22372-140000	58	6
22372-160000	105	3 B
		4
22417-200160	73	23
	88	9
22417-200200	57	13
22417-250250	99	32
22417-320250	10	2
22417-320320	99	33
22487-080200	2	42
	50	15
	110	43
22487-080260	84	33
22487-080350	65	23
22487-080400	99	34
22487-120400	99	35

Parts No. Index

Parts No.	Fig. No.	Ref. No.
22857-500161	84	34
22857-600160	83	4
	88	10
		11
23000-022000	28	19
		20
23000-054000	2	43
	110	44
23000-075000	19	2
23010-018000	74	6
23010-050000	2	44
	110	45
23065-070130	2	12
	110	11
23080-012000	4	2 D
	6	33
	112	25
	118	13
23414-120000	31	20
23414-140000	28	21
	76	19
23414-160021	28	22
23414-190000	76	20
23857-100000	28	23
23871-010000	40	5
23871-020000	42	27
23871-030000	40	6
23980-730150	6	21
	112	26
23980-730180	112	27
23980-730260	4	2 E
	6	1
23980-730330	6	22
23980-730350	112	28
23980-730400	112	3
24101-060014	53	24
24101-060044	31	32
	37	17
	53	25
24101-060054	47	13
	117	13
24101-060064	12	3
	14	5
	59	6
24101-060074	18	6
	55	4
24101-060094	18	7
	42	28
24101-062044	39	8
24101-062054	11	6

Parts No.	Fig. No.	Ref. No.
24101-062054	17	4
	39	9
	42	29
24101-062064	42	30
24101-062074	17	5
24101-063034	53	26
24102-060044	98	12
24104-060004	44	11
24104-062004	50	16
24161-354017	42	31
24162-253216	31	33
24190-080001	47	14
	117	14
24190-100001	42	21
	69	17
24190-100003	72	14
24190-160001	64	8
24311-000050	33	8
24311-000100	38	5
24311-000120	40	17
24311-000125	42	32
	49	4
	117	15
24311-000140	40	12
	53	18
24311-000160	13	8
		8 -1
	64	7
24311-000180	16	15 -1
	32	2
	41	11
24311-000200	33	9
		20 C
24311-000260	31	34
24311-000320	30	2
24311-240100	6	17
	45	16
	112	18
24316-000440	118	14
24316-240100	118	15
24321-000750	37	18
24321-001300	18	8
24341-000112	41	13
24341-000850	16	16 -1
24341-000900	16	16
24351-190170	31	35
24351-240450	38	6
24361-090500	40	21
24421-122207	53	20
24421-173508	53	27

Parts No.	Fig. No.	Ref. No.
24421-253807	31	36
24421-254008	47	15
	117	16
24421-255210	11	7
24550-010150	73	12
24550-012200	66	4
	102	5
24550-018250	67	11
24550-028200	31	6
		10
24761-020000	50	17
26013-060129	69	18
26013-080162	72	15
		16
26013-080202	13	9
26014-100252	92	14
26016-080202	39	10
	42	33
	57	15
26016-080852	53	28
26016-100452	53	29
26016-100652	31	37
26016-101052	31	42
	53	30
26016-101452	31	38
26022-050122	4	9
26064-060151	86	14
26106-060122	3	11
	84	9
	110	46
	111	11
	119	2
26106-060162	2	46
		47
		48
		49
		50
	6	23
	25	13
		14
	77	38
	79	19 -1
		20
		21
	84	9 -1
		10
		11
	103	3
	110	47
		48

Parts No.	Fig. No.	Ref. No.
26106-060162	110	49
		50
	112	29
	114	16
		17
	116	18
		19
26106-060502	116	17
26106-080122	6	25 -1
		31
	71	4
	112	30
		31
26106-080162	2	51
		52
	4	12
		13
	6	25
	28	24
		25
	29	2
	49	5
	50	18
	71	5
	73	24 -1
	76	21
	77	24
		25
	84	12
	89	4
		5
		6
	91	8
	92	15 -1
	110	51
		52
	115	24
		25
	117	17
26106-080202	5	3
	50	19
	68	5
	73	24
	87	4
	90	6
	92	15 -2
	99	36
	100	4
26106-080252	2	53
	38	7

Parts No. Index

Parts No.	Fig. No.	Ref. No.
26106-080252	44	12
	64	9
	92	15
	110	53
26106-080302	26	2
	31	39
	34	18
	47	16
	87	3
26106-080402	31	40
26106-080602	6	24 -1
26106-080652	25	18 -1
	112	32
	114	18
26106-080702	6	24
26106-080802	50	20
26106-080852	50	26 -2
26106-080902	31	41
26106-100162	92	16
26106-100202	8	6
	71	6
		8
	73	25
	77	26
	113	5
	115	26
26106-100252	50	22
	67	13
	69	37
	102	8
		9
		10
26106-100302	16	17
	18	9
	102	9 -1
		10 -1
	105	5
26106-100352	56	6
	91	9
26106-100752	25	15
	114	19
26106-101052	34	19
26106-120452	27	3
26106-120602	65	24
26106-121002	7	8
26116-060202	77	27
	79	19
	115	27
26116-080202	25	16
	114	20

Parts No.	Fig. No.	Ref. No.
26116-080402	25	17
	114	21
26116-080552	25	18
26116-101802	47	17
26116-102202	47	10
26116-140302	45	17
26346-100002	91	10
26347-080002	92	17
26366-060002	52	3
26366-080002	73	26
26366-100002	92	18
26450-060502	69	19
26450-080502	40	22
	53	22
26476-080202	30	3
26487-080163	92	19
26589-060162	86	20 -1
		21
26716-060002	78	8
26716-080002	25	19
	44	1
	50	2 E
		23
	114	22
26716-100002	3	12
	65	25
	70	2
	73	27
	111	12
26716-120002	7	9
	9	5
26736-160002	68	6
26776-100002	34	20
26776-120002	45	18
	79	11 C
	109	6
	116	4
26911-100102	72	17
27260-720000	16	18
29311-162000	25	20
	114	23
29622-140001	6	5
	28	27
	77	31
		34 -1
	80	8
29622-250001	2	55
	77	32
		33
		34

Parts No.	Fig. No.	Ref. No.
29622-250001	107	7
	108	7
933171-15801	77	28
	115	31

Parts No.	Fig. No.	Ref. No.